CITY OF LANCASTER

PUBLIC WORKS CONSTRUCTION PROJECT NO. 24-008

SAMARITAN'S PURSE PARK FORMERLY KNOWN AS EL DORADO PARK RENOVATIONS

APPROVAL

CITY APPROVED BY:

DIRECTOR OF PUBLIC WORKS — DATE

CITY REVIEWED BY:

SENIOR ENGINEER — DATE

SUBMITTED BY:

DATE

CLIENT

LANCASTER

Creating a better tomorrow. Together.

CITY OF LANCASTER

44933 FERN AVENUE
LANCASTER, CA 93534

PROJECT NAME

SAMARITAN'S PURSE PARK FORMERLY KNOWN AS EL DORADO PARK RENOVATION

PWCP NO. 24-008

44501 5TH ST EAST
LANCASTER, CA 93535

ENGINEER/ARCHITECT

IDS

IDS GROUP

1 PETERS CANYON ROAD, SUITE 130
IRVINE, CA. 92606
TEL: 949-387-8500, FAX: 949-387-0800

STAMP

REGISTERED ARCHITECT — JOSEPH SIMPSON — No. C-35573 — REN. 7-31-25 — STATE OF CALIFORNIA

ISSUE

REV.	DESCRIPTION	DATE
	30% CD SET	12/15/23
	60% CD SET	01/12/24
	90% CD SET	02/26/24
1	CLIENT REVISIONS	04/26/24
2	BID SET	09/10/24
3	BULLETIN #1	10/25/24
4	BULLETIN #1 R1	2/14/25
	COMPOSITE SET	9/24/25

PROJECT IDENTIFICATION

THIS DRAWING WAS CREATED IN REVIT V. 2020 UNLESS OTHERWISE NOTED.

THE ORIGINAL SIZE OF THIS SHEET IS 30" X 42"

THESE DRAWINGS AND SPECIFICATIONS ARE THE PROPERTY AND COPYRIGHT OF IDS GROUP AND SHALL NOT BE USED ON ANY OTHER PROJECT OR LOCATIONS EXCEPT AS DESCRIBED ON THE DRAWINGS, WITHOUT THE WRITTEN AGREEMENT WITH IDS GROUP.

IDS PROJECT NO.	22X099.03
IDS DRAWN BY	MJ
IDS CHECKED BY	MM
IDS APPROVED BY	JS

SHEET TITLE

COVER

SHEET NUMBER

G-000

IDS GROUP - FILE LOCATION: C:\Users\melissa.jawherian\Documents\22X099.01 LANC - EL DORADO PARK (E) COMMUNITY CENTER RENOVATION_ARCH_MY72262_melissa.jawherian.rvt
PLOT DATE: 10/29/2024 4:47:46 PM
USER: Author

ABBREVIATIONS

AFF	ABOVE FINISHED FLOOR
ACST	ACOUSTIC
ACT	ACOUSTIC CEILING TILE
APC	ACOUSTIC PANEL CEILING
AWP	ACOUSTIC WALL PANEL
AWT	ACOUSTIC WALL TREATMENT
ADJ	ADJUSTABLE
A/C	AIR CONDITIONING
AHU	AIR HANDLING UNIT
ALT.	ALTERNATE
AL	ALUMINUM
AB	ANCHOR BOLT
APPROX.	APPROXIMATE
ARCH	ARHICTECT
ASPH	ASPHALT
ASSY	ASSEMBLY
AUTO	AUTOMATIC
AWN	AWNING
A/V	AUDIO-VISUAL
B	BASEMENT
BALC	BALCONY
BATH	BATHROOM
BM	BEAM
BR	BEDROOM
BMRK	BENCHMARK
BLK	BLOCK/BLOCKING
BD	BOARD
BKSH	BOOKSHELVES
BOT	BOTTOM
BRKT	BRACKET
BC	BROOM CLOSET
BLDG	BUILDING
BLT-IN	BUILT IN
BUR	BUILT-UP ROOFING
BOS	BOTTOM OF SLAB
CF/CI	CONTRACTOR FURNISHED / CONTRACTOR INSTALLED
CA	CLEAR ANONDIZED
CAB	CABINET
CPT	CARPET
CSMT	CASEMENT
CI	CAST IRON
CB	CATCH BASIN
CLG	CEILING
CEM	CEMENT
CL	CENTER LINE
CER	CERAMIC
CT	CERAMIC TILE
CO	CLEAN OUT
CLR	CLEAR
COL	COLUMN
CBP	COMPOSITE BUILDING PANEL
CONC	CONCRETE
CMU	CONCRETE MASONRY UNIT
CONST	CONSTRUCTION
CONT	CONTINUOUS
CONTR	CONTRACTOR
CJ	CONTROL JOINT
COP	COPPER
CG	CORNER GUARD
CORR	CORRIDOR
CTR	COUNTER
CSMS	COUNTERSUNK METAL SCREW
CSWS	COUNTERSUNK WOOD SCREW
CRS	COURSES
CC	CUBICLE CURTAIN
CM	CENTIMETER
DL	DEAD LOAD
DE	DUAL EGRESS
DEMO	DEMOLISH / DEMOLITION
DET	DETAIL
DIA	DIAMETER
DIFF	DIFFUSER
DIM	DIMENSION
DO	DITTO
DR	DOOR
DH	DOUBLE HUNG
DN	DOWN
DS	DOWN SPOUT
D	DRAIN
DWR	DRAWER
DWG	DRAWING
DWGS	DRAWINGS
DF	DRINKING FOUNTAIN
DUP	DUPLICATOR
DOP	DISPERSED OIL PARTICULATE

(E)	EXISTING
EXIST	EXISTING
ETR	EXISTING TO REMAIN
EA	EACH
E	EAST
EQ	EQUAL
EQPT	EQUIPMENT
EWC	ELECTRIC WATER COOLER
ELEC	ELECTRICAL
ELEV	ELEVATOR
EMERG	EMEGENCY
EG	END GUARD
ENGR	ENGINEER
EQUIP	EQUIPMENT
EQPT	EQUIPMENT
EXP	EXPANSION
EB	EXPANSION BOLT
EJ	EXPANSION JOINT
EXPC	EXPOSED CONSTRUCTION
EXT	EXTERIOR
EIFS	EXTERIOR INSULATION AND FINISH SYSTEM
FF	FINISH FLOOR
FWC	FABRIC WALL COVERING
FWS	FABRIC WALL SYSTEM
FT	FEET / FOOT
FG	FINISH GRADE
FV	FIELD VERIFY
FIN	FINISH
FDV	FIRE DEPARTMENT VALVE
FE	FIRE EXTINGUISHER
FEC	FIRE EXTINGUISHER CABINET
FHC	FIRE HOSE CABINET
FP	FIRE PROOFING
FRP	FIBERGLASS REINFORCED PANEL
FIX	FIXTURE
FLASH	FLASHING
FLEX	FLEXIBLE
FL	FLOOR
FD	FLOOR DRAIN
FS	FLOOR SINK
FLUOR	FLUORESCENT
FTG	FOOTING
FDN	FOUNDATION
FRMG	FRAMING
FURN	FURNACE
FTDF	FIRE TREATED DOUGLAS FIR
FOF	FACE OF FINISH
FOS	FACE OF STUD
FLS	FIRE LIFE SAFETY
GA	GAGE
GALV	GALVANIZED
GI	GALVONIZED IRON
GEN	GENERATOR
GL	GLASS
GLB	GLASS BLOCK
GB	GRAB BAR
GR	GRADE
GT	GRANITE TILE
GFI	GROUND FAULT CIRCUIT INTERRUPT
GUTT	GUTTER
GYP	GYPSUM
GYP BD	GYPSUM BOARD
HR	HAND RAIL
HDW	HARDWIRE
HD WD	HARDWOOD
HD	HEAD
HVAC	HEATING, VENTILATING, AND AIR CONDITIONING
HT	HEIGHT
HPAC	HIGH PERMORMANCE ARHICTECTURAL COATING
HP	HIGH POINT
HC	HOLLOW CORE
HM	HOLLOW METAL
HORZ	HORIZONTAL
HB	HOSE BIBB
HOSP	HOSPITAL
HC	HOT AND COLD
HO	HOLD-OPEN
HSS	HOLLOW STEEL SECTION

IN	INCH / INCHES
INFO	INFORMATION
ID	INSIDE DIAMETER
INS	INSULATED
INSUL	INSULATION
IR	INTEGRAL RESILIENT BASE
INT	INTERIOR
ILSM	INTERIM LIFE SAFETY MEASURE
JAN	JANITOR
JT	JOINT
JST	JOIST
KG	KILOGRAM
KD	KNOCK-DOWN FRAME
LL	LIVE LOAD
LAB	LABORATORY
LAV	LAVATORY
LAM	LAMINATE
LC	LAUNDRY CHUTE
LT	LIGHT
LTWT	LIGHT WEIGHT
LB	POUNDS
LIN. DIFF.	LINEAR DIFFUSER
LP	LOW POINT
LLV	LONG LEG VERTICAL
LVT	LUXURY VINYL TILE
M	METER
MM	MILLIMETER
MACH	MACHINE
MAT	MATERIAL
MH	MANHOLE
MFD	MANUFACTURED
MFR	MANUFACTURER
MT	MARBLE TILE
MK	MARK
MB	MARKER BOARD
MO	MASONRY OPENING
MAX	MAXIMUM
MIN	MINIMUM
MECH	MECHANICAL
MC	MEDICINE CHEST
MEMB	MEMBRANE
MTL	METAL
MFTSM	MINERAL-FILLED THERMOPLASTIC SURFACING MATERIAL
MDF	MEDIUM DENSITY FIBERBOARD
MHO	MAGNETIC HOLD-OPEN
MISC	MISCELLANEOUS
MOD	MODIFIED
MLDG	MOLDING
(N)	NEW
N	NORTH
N/A	NOT APPLICABLE
NF	NATURAL FINISH
NOM	NOMINAL
NIC	NOT IN CONTRACT
NTS	NOT TO SCALE
NO.	NUMBER
OF/OI	OWNER FURNISHED / OWNER INSTALLED
OF/CI	OWNER FURNISHED / CONTRACOTR INSTALLED
OFF	OFFICE
OC	ON CENTER
OA	OUTSIDE AIR
OPP	OPPOSITE
OH	OPPOSITE HAND
ORCH	ORCHESTRA
OP	ORNAMENTAL PAINT
OPL	ORNAMENTAL PLASTER
OD	OUTSIDE DIAMETER
P	PAINT
PL	PLATE
PNL	PANEL
PLAM	PLASTIC LAMINATE
PTC	PEDESTRIAN TRAFFIC COATING
PSF	POUNDS PER SQUARE FOOT
PSI	POUNDS PER SQUARE INCH
PREFAB	PREFABRICATED
PERF	PERFORATED
PLUMB	PLUMBING

QTY	QUANTITY
QT	QUARRY TILE
RAD	RADIUS
RDWD	REDWOOD
REF	REFRIGERATOR
REINF	REINFORCED
REBAR	REINFORCING BAR
REV	REVISION
RO	ROUGH OPENING
RM	ROOM
RA	RETURN AIR
RD	ROOF DRAIN
RS	RESILIENT SHEET FLOORING
REQ	REQUIRED
SS	STAINLESS STEEL
SMS	SHEET METAL SCREW
SC	SOLID CORE
SCH	SCHEDULE
SECT	SECTION
SHTHG	SHEATHING
SHT	SHEET
SLV	SHORT LEG VERTICAL
SPR	SINGLE PLY ROOFING
SL GL DR	SLIDING GLASS DOOR
SP	SOLID POLYMER
SAP	SOUND ABSORTIVE PANEL
SPECS	SPECIFICATIONS
SQ	SQUARE
SQ FT	SQUARE FEET
S&V	STAIN AND VARNISH
STD	STANDARD
STL	STEEL
STLC	STEEL CHANNEL
SEJ	SEISMIC JOINT
SJ	STEEL JOIST
STOR	STORAGE
STRUCT	STRUCTURAL
SUSP	SUSPENDED
SW	SWITCH
$	SWITCH
S	SOUTH
SYM	SYMMETRICAL
SIM	SIMILAR
TBD	TO BE DETERMINED
TB	TACKBOARD
TELE	TELEPHONE
TV	TELEVISION
TG	TEMPERED GLASS
TEMP	TEMPORARY
TLT	TOILET
TOS	TOP OF SLAB
TO	TOP OF
TYP	TYPICAL
U/S	UNDERSIDE
UC	UNDER CABINET
UNFIN	UNFINISHED
U.N.O.	UNLESS NOTED OTHERWISE
VF/VI	VENDOR FURNISHED / VENDOR INSTALLED
VF/CI	VENDOR FURNISHED / CONTRACTOR INSTALLED
VAC	VACUUM
VB	VAPOR BARRIER
VERT	VERTICAL
VIF	VERIFY IN FIELD
VEST	VESTIBULE
VCT	VINYL COMPOSITION TILE
VWC	VINYL WALL COVERING
W/	WITH
W/O	WITHOUT
WC	WASH CLOSET
WD	WOOD
WT	WEIGHT
WP	WATER PROOF
WRB	WATER RESISTANT CEMENT BOARD
WWF	WELDED WIRE FRAME
WWM	WELDED WIRE MESH
WF	WIDE FLANGE
W	WEST
WD	WOOD
YD	YARD

SYMBOL LEGEND

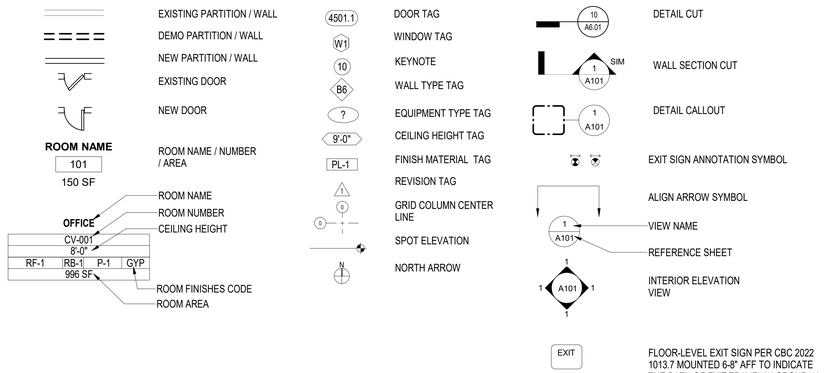

VICINITY MAP

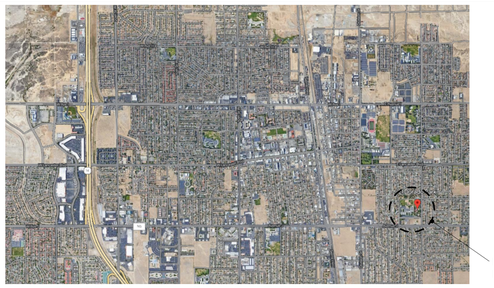

SITE MAP

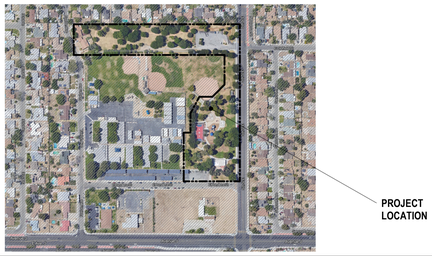

OWNER

PUBLIC WORKS
CITY OF LANCASTER
44933 NORTH FERN AVENUE
LANCASTER, CALIFORNIA 93534

FACILITY :
FRANK LUJAN
ENGINEER - PW CITY ENGINEERING
PHONE: 661.723.6225
EMAIL: flujan@cityoflancasterca.gov

DESIGN TEAM

PROJECT MANAGER
MATTHEW MILLER
IDS GROUP INC.
1 PETERS CANYON ROAD, SUITE 130
IRVINE, CALIFORNIA 92606
PHONE: 949-387-8500 EXT 142
matthew.miller@idsgi.com

ARCHITECT OF RECORD
JOHN SILBER
IDS GROUP INC.
1 PETERS CANYON ROAD, SUITE 130
IRVINE, CALIFORNIA 92606
PHONE: 949-387-8500 EXT 154

SPECS
KURT SCHWARM
kschwarm@kcspecs.com

CIVIL ENGINEER OF RECORD
ADRIAN ANDERSON
IDS GROUP INC.
1 PETERS CANYON ROAD, SUITE 130
IRVINE, CALIFORNIA 92606
PHONE: 949-387-8500 EXT 509

STRUCTURAL ENGINEER OF RECORD
SAID HILMY
IDS GROUP INC.
1 PETERS CANYON ROAD, SUITE 130
IRVINE, CALIFORNIA 92606
PHONE: 949-387-8500 EXT 113

MECHANICAL/PLUMBING ENGINEER OF RECORD
DARREN SMITH
IDS GROUP INC.
1 PETERS CANYON ROAD, SUITE 130
IRVINE, CALIFORNIA 92606
PHONE: 949-387-8500 EXT 454

ELECTRICAL ENGINEER OF RECORD
STEVEN COLLINS
IDS GROUP INC.
1 PETERS CANYON ROAD, SUITE 130
IRVINE, CALIFORNIA 92606
PHONE: 949-387-8500 EXT 325

PROJECT DATA

PROJECT LOCATION:	SAMARITAN'S PURSE PARK FORMERLY KNOWN AS EL DORADO PARK 5th STREET E. & PONDERA STREET, LANCASTER, CA 90063
APN:	3142-001-903 and 3142-002-900
ZONING:	ARTICLE V. - PARK (PK) ZONE
CONSTRUCTION TYPE:	TYPE V-B
OCCUPANCY CLASSIFICATION:	A3 (ASSEMBLY) & B (OFFICE)
NUMBER OF STORIES:	1-STORY
SPRINKLER:	NO
BUILDING AREA:	BUILDING AREA:~1,500 SF COMMUNITY CENTER & ~2,900 SF PATIO

PROJECT DESCRIPTION

RENOVATION OF THE EXISTING 7.2 ACRE SAMARITAN'S PURSE PARK FORMERLY KNOWN AS EL DORADO PARK TO INCORPORATE RENOVATION OF EXISTING COMMUNITY CENTER BUILDING, NEW RECREATIONAL FEATURES, AND UPGRADES TO THE EXISTING PARK INCLUDING NEW LANDSCAPING AND VEGETATION,
PROVIDING ADA ACCESS TO PATHWAYS, SIDEWALKS EXERCISE EQUIPMENT AND RECREATIONAL AREAS. THE PROJECT'S PARK FEATURES WILL INCLUDE THE FOLLOWING FEATURES:

- RENOVATION OF THE EXISTING COMMMUNITY CENTER BUILDING
- ADA ACCESSIBLE WALKING/JOGGING PATHWAYS WITH ELEVEN (11) EXCERCISE EQUIPMENT STATIONS
- HALF-COURT BASKETBALL COURT
- SPLASH PAD AREA
- SKATEBOARD AREA
- NEW LANDSCAPING AND VEGETATION
- PLAZA AREA WITH SEATING/BENCHES AND PARK FURNITURE WITH OVERHEAD SHADE SAILS STRUCTURES
- NEW CONCRETE W/ NEW LANDSCAPED EDGE @ PATIO
- NEW METAL CANOPY IN THE PATIO
- NEW MECHANICAL PAD
- NEW TRASH & ENCLOSURE

SUBMISSION NOTES

THE FOLLOWING BUILDING SYSTEMS SHALL BE TREATED AS DEFERRED SUBMITTALS:

1. OVERHEAD/SAIL SHADE STRUCTURES AND ENGINEERING SHALL BE SUBMITTED FOR APPROVALS PRIOR TO INSTALLATION IN ACCORDANCE WITH CALIFORNIA BUILDING CODE AND LOCAL OFFICIALS (SEE DRAWING SHEET A-805).
2. SPLASH PAD PLAY AREA & ADJOINING PUMPHOUSE AND ENGINEERING SHALL BE SUBMITTED FOR APPROVALS PRIOR TO INSTALLATION IN ACCORDANCE WITH CALIFORNIA BUILDING CODE, LOCAL OFFICIALS AND THE CALIFORNIA DEPARTMENT OF PUBLIC HEALTH (SEE DRAWING SHEETS A-001, A-102, A-805).
3. SITE AND BUILDING SIGNAGES.
4. EXERCISE EQUIPMENT.
5. SKATEBOARD PARK.

2

ADD ALTERNATES AND DEDUCT ALTERNATES

ADD-ALTERNATE BIDS

BIDDER AGREES TO PROVIDE FOR ALL OF THE ALTERNATE BID ITEMS LISTED HEREIN. THESE ALTERNATES ARE LISTED IN SPECIFICATION SECTION 012300 AND THE REQUIRED SCOPE OF WORK IS DESCRIBED IN THEIR RESPECTIVE SPECIFICATION SECTIONS AND AS INDICATED ON THE DRAWINGS.

CONSTRUCT NEW BASKETBALL COURT WITH LIGHTING
BASE BID #1 TO INCLUDE THE FOLLOWING:
FOOTPRINT CLEARING/GRADING
BASKETBALL COURT PAVEMENT
BASKETBALL BACKSTOP & HOOP

ADD-ALTERNATE #1 – BASKETBALL LIGHTING:

CONSTRUCT A WALKING PAD WITH ELEVEN (11) EXERCISE/WORKOUT STATIONS (NORTH PARK & PARKING LOT)
BASE BID #1 TO INCLUDE THE FOLLOWING:
PROVIDE ELECTRICAL CONDUIT WITH PULL STRING FROM THE SKATE PARK'S NORTH LIGHT POLE TO THE EXISTING NORTH PARK PARKING LOT'S FIRST LIGHT POLE LOW VOLTAGE CAMERAS

ADD-ALTERNATE #2 TO INCLUDE THE FOLLOWING:
PROVIDE NEW ACCESSIBLE PATH OF TRAVEL AT EAST SIDE OF EXISTING PARKING LOT FROM CITY SIDEWALK AT 5TH AVENUE TO NORTH PARK TRAIL
PROVIDE NEW ACCESSIBLE PATH OF TRAVEL FROM FOXTON AVENUE TO NORTH PARK TRAIL
PROVIDE ACCESSIBLE RAMP AND PATHWAY FROM EXISTING ADA PARKING STALLS AT NORTHWEST CORNER OF EXISTING PARKING LOT
STABILIZE DECOMPOSED GRANITE PATHWAY
PROVIDE PATHWAY CONCRETE EDGING
PROVIDE (11) FITNESS EQUIPMENT SAFETY SURFACES
PROVIDE (11) FITNESS EQUIPMENT STATIONS (INCLUDING POSTS)
REMOVE (13) EXISTING LIGHT POLES AT NORTH PARK TRAIL
PROVIDE TRENCHING FOR NEW UNDERGROUND CONDUIT & WIRING
PROVIDE (6) NEW LIGHT POLES AT PARKING LOT PER ELECTRICAL DRAWINGS
PROVIDE (24) NEW LIGHT POLES ALONG NORTH PARK TRAIL PER ELECTRICAL DRAWINGS
PROVIDE (1) DRINKING FOUNTAIN AT NORTH PARK TRAIL PER LANDSCAPE DRAWINGS
WEATHER TRACK CONTROLLER & FLOW METER
SPRAY HEADS
TREE PROTECTION (80)
MISC. SITE FURNITURE (BIKE RACKS)

CODE REFERENCES

2022	CALIFORNIA ADMINISTRATIVE CODE (CAC)	UNDERWRITERS LABORATORY (UL)
2022	CALIFORNIA BUILDING CODE (CBC) SEE CITY OF LANCASTER AMENDMENTS	AMERICAN SOCIETY FOR TESTING AND MATERIALS (ASTM)
		AMERICAN SOCIETY FOR MECHANICAL ENGINEERS (ASME)
2022	CALIFORNIA ELECTRICAL CODE (CEC)	
2022	CALIFORNIA MECHANICAL CODE (CMC)	SHEET METAL AND AIR CONDITIONING CONTRACTOR'S NATIONAL ASSOCIATION (SMACNA)
2022	CALIFORNIA PLUMBING CODE (CPC)	FOR A COMPLETE LIST OF APPLICABLE NFPA STANDARD REFER TO 2022 CBC (SFM) CHAPTER 35 AND CALIFORNIA FIRE CODE CHAPTER 80
2022	CALIFORNIA FIRE CODE (CFC)	
2022	CALIFORNIA ENERGY CODE	SEE CALIFORNIA BUILDING CODE, CHAPTER 35 FOR STATE OF CALIFORNIA AMENDMENTS TO NFPA STANDARD
2010	ADA STANDARDS	
2022	GREEN BUILDING CODE	

APPROVAL

CITY APPROVED BY:
DIRECTOR OF PUBLIC WORKS — DATE
CITY REVIEWED BY:
SENIOR ENGINEER — DATE
SUBMITTED BY:
DATE

CLIENT
LANCASTER
Creating a better tomorrow. Together.
CITY OF LANCASTER
44933 FERN AVENUE
LANCASTER, CA 93534

PROJECT NAME
SAMARITAN'S PURSE PARK FORMERLY KNOWN AS EL DORADO PARK RENOVATION
PWCP NO. 24-008
44501 5TH ST EAST
LANCASTER, CA 93535

ENGINEER/ARCHITECT
IDS
IDS GROUP
1 PETERS CANYON ROAD, SUITE 130
IRVINE, CA 92606
TEL: 949-387-8500, FAX: 949-387-0800

STAMP
REGISTERED ARCHITECT
JOHN SILBER
No. 5573
REN. 7-31-25
STATE OF CALIFORNIA

ISSUE

REV.	DESCRIPTION	DATE
	30% CD SET	12/15/23
	60% CD SET	01/12/24
	90% CD SET	02/26/24
1	CLIENT REVISIONS	04/26/24
2	BID SET	09/10/24
3	BULLETIN #1	10/25/24
4	BULLETIN #1 R1	2/14/25
	COMPOSITE SET	9/24/25

PROJECT IDENTIFICATION

THIS DRAWING WAS CREATED IN REVIT V. 2020 UNLESS OTHERWISE NOTED.

THE ORIGINAL SIZE OF THIS SHEET IS 30" X 42"

THESE DRAWINGS AND SPECIFICATIONS ARE THE PROPERTY AND COPYRIGHT OF IDS GROUP AND SHALL NOT BE USED ON ANY OTHER PROJECT OR LOCATIONS EXCEPT AS DESCRIBED ON THE DRAWINGS, WITHOUT THE WRITTEN AGREEMENT WITH IDS GROUP.

IDS PROJECT NO.	22X099.03
IDS DRAWN BY	MJ
IDS CHECKED BY	MM
IDS APPROVED BY	JS

SHEET TITLE
PROJECT INFORMATION

SHEET NUMBER
G-001

IDS GROUP - FILE LOCATION: C:\Users\mikaa.javaherian\Documents\22X099.01 LANC - El DORADO PARK (E) COMMUNITY CENTER RENOVATION_ ASD_LAYT2022_Dwhite.jpeakman\AUTOSAVE\A1
PLOT DATE: 10/29/2024 4:47:47 PM
USER: Author

GENERAL NOTES

1. REFER TO PROJECT SPECIFICATIONS FOR PROJECT REQUIREMENTS.

2. THE CONTRACTOR SHALL BE RESPONSIBLE FOR THE SAFETY OF WORK AREA DURING CONSTRUCTION PERIOD. THE CONTRACTOR SHALL PROTECT ADJACENT PROPERTY AND UTILITIES IN ACCORDANCE WITH ALL NATIONAL, STATE, AND LOCAL SAFETY ORDINANCES.

3. DRAWINGS INDICATE GENERAL AND TYPICAL DETAILS OF CONSTRUCTION. WHERE CONDITIONS ARE NOT SPECIFICALLY INDICATED BUT ARE OF SIMILAR CHARACTER TO DETAILS SHOWN, SIMILAR DETAILS OF CONSTRUCTION SHALL BE USED SUBJECT TO PRIOR REVIEW BY THE SEOR.

4. THE CONTRACTOR SHALL SUPERVISE AND DIRECT THE WORK, AND SHALL BE SOLELY RESPONSIBLE FOR ALL CONSTRUCTION MEANS, METHODS, TECHNIQUES, SEQUENCES AND PROCEDURES. THE SUPPORTING SERVICES BY THE SEOR, WHETHER PERFORMED PRIOR TO, DURING, OR AFTER CONSTRUCTION, ARE PERFORMED SOLELY FOR THE PURPOSE OF ASSISTING IN QUALITY CONTROL AND IN ACHIEVING CONFORMANCE WITH CONTRACT DRAWINGS AND PROJECT SPECIFICATIONS; BUT THEY DO NOT GUARANTEE THE CONTRACTOR'S PERFORMANCE AND SHALL NOT BE CONSIDERED AS SUPERVISION OF CONSTRUCTION.

5. SHOP DRAWINGS REQUIRED BY THE PROJECT SPECIFICATIONS SHALL BE SUBMITTED TO THE SEOR FOR REVIEW PRIOR TO FABRICATION. DRAWINGS ARE REVIEWED BY THE SEOR FOR GENERAL CONFORMANCE TO THE DESIGN. REGARDLESS OF THE SEOR'S REVIEW, THE CONTRACTOR IS FULLY AND SOLELY RESPONSIBLE FOR COMPLETE AND SATISFACTORY SUBMITTAL AND CONFORMANCE TO THE CONTRACT DOCUMENTS. SHOP DRAWINGS WILL BE REJECTED FOR INCOMPLETENESS, LACK OF CALCULATIONS (IF REQUIRED) OR CHANGES WITHOUT PRE-APPROVAL. ALL STRUCTURAL CALCULATIONS AND DRAWINGS AS PART OF THE SHOP DRAWINGS SUBMITTAL SHALL BE SIGNED AND STAMPED BY A CALIFORNIA REGISTERED STRUCTURAL ENGINEER.

6. ANY PARTS OF WORK AREA WHICH ARE TO BE BARRICADED OR SEALED TO NON-CONSTRUCTION INDIVIDUALS MUST BE COORDINATED WITH AND APPROVED BY THE OWNER BEFORE PROCEEDING WITH THE WORK.

7. THE CONTRACTOR SHALL EXERT EVERY EFFORT TO PREVENT DUST AND CONSTRUCTION DEBRIS FROM CONTAMINATING THE WORK AREA. THESE EFFORTS SHALL INCLUDE BUT NOT BE LIMITED TO PROVIDING A DAILY CLEANUP OF THE CONSTRUCTION AREA. THE CONTRACTOR SHALL REFER TO THE PROJECT SPECIFICATIONS FOR ADDITIONAL REQUIREMENTS.

8. THE CONTRACTOR SHALL EXERT EVERY EFFORT TO MINIMIZE THE CONSTRUCTION NOISE AND DISTURBANCE DURING CONSTRUCTION.

9. THE CONTRACTOR SHALL BE RESPONSIBLE TO SECURE THE CONSTRUCTION SITE.

10. CUTTING, BORING, SAW-CUTTING OR DRILLING THROUGH NEW STRUCTURAL MEMBERS OTHER THAN THOSE DETAILED ON STRUCTURAL DRAWINGS SHALL NOT BE DONE WITHOUT THE SEOR'S APPROVAL.

11. THE CONTRACTOR SHALL:
A. CHECK ALL DIMENSIONS.
B. BE RESPONSIBLE FOR COORDINATING THE WORK OF ALL TRADES.
ALL DISCREPANCIES SHALL BE CALLED TO THE ATTENTION OF THE SEOR AND SHALL BE RESOLVED BEFORE PROCEEDING WITH THE WORK.

12. ALL MATERIALS, FEATURES OR CONDITIONS NOT IDENTIFIED AS (E) WHICH MEANS "EXISTING," SHALL BE CONSIDERED AS NEW AND PART OF THE PROJECT SCOPE OF WORK.

13. THE CONTRACTOR IS FULLY AND SOLELY RESPONSIBLE FOR ALL SHORING REQUIRED IN ORDER TO SAFELY ACHIEVE THE FINAL CONSTRUCTION SHOWN ON THE DRAWINGS. THIS INCLUDES, BUT IS NOT LIMITED TO, ANY TYPES OF SHORING REQUIRED FOR SOILS EXCAVATION AND BACKFILL WORK; SUPPORT OF STRUCTURAL ELEMENTS UNTIL THEY HAVE ACHIEVED THE NECESSARY STRENGTH TO PERFORM IN THE FINAL POSITION AND MANNER SHOWN ON THE DRAWINGS; AND SUPPORT OF STRUCTURAL ELEMENTS THAT ARE MODIFIED AND THEREBY REDUCED IN STRENGTH IN ANY WAY DURING CONSTRUCTION AS REQUIRED TO ACHIEVE THE FINAL CONSTRUCTION AS SHOWN ON THE DRAWINGS. ALL SHORING CALCULATIONS AND DRAWINGS SHALL BE STAMPED BY A CALIFORNIA REGISTERED STRUCTURAL ENGINEER AND SUBMITTED FOR REVIEW PRIOR TO PERFORMING THE WORK.

14. WHERE NOT INDICATED OTHERWISE, THE LATEST EDITION OF ALL CITED DOCUMENTS SHALL GOVERN.

15. THE TERM CBC IN THESE DRAWINGS MEANS 2022 CALIFORNIA BUILDING CODE, CALIFORNIA CODE OF REGULATIONS, TITLE 24, ALL PARTS AND VOLUMES.

16. ALL CONSTRUCTION AND WORKMANSHIP, INCLUDING MATERIALS, SHALL CONFORM TO THESE DRAWINGS, PROJECT SPECIFICATIONS, AND THE CBC.

17. PROVIDE ALL MEASURES NECESSARY TO PROTECT THE STRUCTURE AND ADJACENT STRUCTURE, AND THEIR FINISHES AND UTILITIES, DURING CONSTRUCTION.

18. THE CONTRACTOR SHALL COORDINATE ALL UTILITY LOCATIONS WITH OTHER DRAWINGS AND SHALL CONDUCT A DETAILED SURVEY OF EXISTING UTILITIES TO IDENTIFY INTERFERENCES WITH THE NEW CONSTRUCTION. PROMPTLY NOTIFY THE ARCHITECT OF ANY INTERFERENCES PRIOR TO PERFORMING THE WORK.

19. CORING, TRENCHING & EXCAVATIONS
PRIOR TO CORING, TRENCHING, AND EXCAVATIONS, THE CONTRACTOR IS RESPONSIBLE FOR AND IS REQUIRED TO USE AN INDEPENDENT UTILITY LOCATING SERVICE TO LOCATION ALL UTILITIES WITHIN THE IMPACTED AREA(S). THE INDEPENDENT UTILITY LOCATING SERVICE SHALL PROVIDE CERTIFICATION THAT IT HAS LOCATED ALL UTILITIES IN THE IMPACTED AREA(S) AND THE CONTRACTOR MUST DEPICT ALL DISCOVERED UTILITIES ACCURATELY ON REDLINES/AS-BUILT PLANS FOR SUBMISSION TO THE COUNTY FOR REVIEW AND APPROVAL PRIOR TO COMMENCEMENT OF CORING, TRENCHING, OR EXCAVATIONS. IN ADDITION, FOR UTILITIES REQUIRING EXTERNAL AGENCY NOTIFICATION, COORDINATION, AND APPROVALS, THE CONTRACTOR MUST PROVIDE PROOF OF NOTIFICATION, COORDINATION, AND REVIEWS BY EXTERNAL AGENCIES.

20. ALL SPECIAL/DEPUTY INSPECTION REPORTS AND TESTS SHALL INCLUDE: JOB NAME AND JOB NUMBER, SITE LOCATION, PLAN PAGE AND DETAILS, ANY RFI, AND CODE REFERNNCES

DESIGN CRITERIA

DESIGN CONFORMS TO THE 2019 CALIFORNIA BUILDING CODE

1. LIVE LOADS:
- ROOF: 20 PSF (REDUCIBLE)

2. WIND ANALYSIS: WIND LOADS ARE BASED ON CBC WITH THE FOLLOWING FACTORS:
- EXPOSURE CATEGORY = C
- V = 95 MPH
- G = 0.85
- K_z = 0.90
- K_{zt} = 1.0
- K_d = 0.85
- K_e = 1.0
- RISK CATEGORY = II

3. SEISMIC ANALYSIS: EQUIVALENT LATERAL FORCE PROCEDURE
- SITE CLASS = D (DEFAULT)
- SEISMIC DESIGN CATEGORY = D
- RISK OCCUPANCY CATEGORY = II
- I_e = 1.00
- S_s = 1.500g
- S_1 = 0.600g
- Fa = 1.0g
- Fv = 1.7g
- S_{DS} = 1.000g
- S_{D1} = 0.680g

4. FREESTANDING CANOPY : STEEL ORDINARY CANTILEVER COLUMN
- R = 1.25
- Ω = 1.25
- Cd = 1.25
- Cs = 0.80
- Rho = 1.0
- Vu (BASE SHEAR) = 7.20 KIPS

STRUCTURAL STEEL

1. THE CONTRACTOR SHALL SUBMIT ALL STRUCTURAL STEEL AND MISCELLANEOUS STEEL SHOP DRAWINGS TO THE ENGINEER FOR REVIEW PRIOR TO FABRICATION.

2. MATERIAL TEST OR REPORTS FOR HOT-ROLLED STRUCTURAL SHAPES, PLATES, AND BARS SHALL BE MADE IN ACCORDANCE WITH ASTM A6. FOR SHEET MATERIAL, TEST SHALL BE MADE IN ACCORDANCE WITH ASTM A568. FOR TUBING AND PIPE, SUCH TEST SHALL BE MADE IN ACCORDANCE WITH REQUIREMENTS OF THE APPLICABLE ASTM STANDARDS.

3. STEEL MATERIALS SHALL CONFORM TO THE FOLLOWING, UNLESS OTHERWISE NOTED:
A. ANGLES, PLATES AND BARS: ASTM A36 (Fy=36ksi, Fu=58ksi)
B. RECTANGULAR AND SQUARE HSS: ASTM A500, GRADE B (Fy=46ksi, Fu=65ksi)
C. PIPES: ASTM A53, GRADE B (Fy=35ksi, Fu=60ksi)
D. BOLTS AT STEEL-TO-STEEL CONNECTIONS: ASTM A325 ST (SNUG-TIGHTENED), TYPE 1; 7/8"∅ TYP. U.O.N.
E. BOLTS AT OTHER APPLICATIONS: ASTM A307
F. NUTS: ASTM A563
G. WASHERS: ASTM F436
H. TWIST-OFF-TYPE TENSION-CONTROL BOLT ASSEMBLIES: ASTM F1852
I. COMPRESSIBLE-WASHER-TYPE DIRECT-TENSION INDICATORS: ASTM F959

5. HEAVY-HEX STRUCTURAL BOLT AND NUT DIMENSIONS SHALL MEET REQUIREMENTS OF ANSI/ASME B18.2.6. ALL BOLTS SHALL HAVE A 3 THREAD ENGAGEMENT MINIMUM.

6. DIAMETER OF BOLT HOLE SHALL BE 1/16" LARGER THAN THE BOLT'S DIAMETER UNLESS OTHERWISE NOTED.

7. IF DRILLING HOLES AT STEEL MEMBERS TO ACCOMMODATE THE CONCRETE ANCHORS IS REQUIRED, THE DRILLING MUST BE DONE AFTER THE ANCHORS HAVE BEEN INSTALLED. THE HOLES AT STEEL MEMBERS SHALL MATCH THE LOCATION OF INSTALLED ANCHORS.

8. PROVIDE BEVELED WASHERS ON SLOPING SURFACE OF CONNECTIONS FOR FULL BEARING.

9. MINIMUM BOLT SPACING FROM CENTER OF STANDARD AISC HOLE AS FOLLOWS, U.N.O.:
CENTER-TO-CENTER = 3 BOLT DIAMETER
CENTER-TO-EDGE = VARIES PER AISC 360-16 TABLE J3.4

10. THE NATURAL CAMBER IN BEAMS SHALL BE ORIENTED UP, UNLESS NOTED OTHERWISE. AT CANTILEVERS, THE NATURAL CAMBER SHALL BE ORIENTED SO THAT THE FREE END IS ABOVE THE CONNECTED END. THE TOP OF ALL MEMBERS SHALL BE CLEARLY IDENTIFIED. ALL BEAM CAMBERS SHOWN ON THE PLANS SHALL INCLUDE NATURAL CAMBER.

11. GALVANIZE ALL STEEL EXPOSED TO WEATHER, UNLESS OTHERWISE NOTED. REPAIR GALVANIZING AT FIELD WELDS WITH CARBOLINE CARBOMASTIC 15 REPAIR PAINT (10 MILS), TYPICAL.

12. UNDER NO CIRCUMSTANCES SHALL DRAWINGS BE SCALED OR REFERENCE ELECTRONIC BUILDING INFORMATION BE USED TO DETERMINE ELEVATIONS OR DIMENSIONS.

13. THE CONTRACTOR SHALL ESTABLISH A MASTER SET OF TOP-OF-STEEL DRAWINGS FOR ALL AREAS OF THE BUILDING OR STRUCTURE FOR APPROVAL BY THE ARCHITECT BEFORE BEGINNING FABRICATION OF STRUCTURAL STEEL. THE CONTRACTOR'S MASTER SET OF TOP-OF-STEEL DRAWINGS SHALL BE SUBMITTED AT THE BEGINNING OF THE SHOP DRAWING SUBMITTAL PROCESS. THIS SET OF DRAWINGS SHALL SHOW ALL TOP-OF-STEEL ELEVATIONS, ALL EDGE OF STEEL INFORMATION FOR FLOOR AND ROOF LEVELS, AND ALL STEEL FRAMING DIMENSIONS AT FLOOR AND WALL OPENINGS.

STRUCTURAL STEEL WELDING

1. ALL WELDING SHALL BE IN CONFORMANCE WITH THE AWS D1.1 AND AWS D1.8.

2. ALL WELDING MUST BE APPROVED BY AN AWS CERTIFIED INSPECTOR.

3. ALL WELDING OF STEEL SHALL CONFORM TO AWS D1.1 AND AWS D1.8 AND SHALL BE PERFORMED BY AWS CERTIFIED WELDERS USING E-70XX LOW HYDROGEN MOISTURE RESISTING ELECTRODES UNLESS OTHERWISE NOTED.

4. ALL WELDS USED IN MEMBERS AND CONNECTIONS IN THE SEISMIC LOAD RESISTING SYSTEM (SLRS) SHALL BE MADE WITH FILLER METALS MEETING THE REQUIREMENTS SPECIFIED IN AWS D1.8 CLAUSE 6.3. ALL WELDING ELECTRODES AND ELECTRODE-FLUX COMBINATIONS SHALL MEET DIFFUSIBLE HYDROGEN TESTING REQUIREMENTS OF TABLE 6.3 OF AWS D1.8. WELDS DESIGNATED AS DEMAND 'CRITICAL WELDS' SHALL BE MADE WITH FILLER METALS MEETING THE REQUIREMENTS SPECIFIED IN AWS D1.8 CLAUSES 6.3.5, 6.3.6, 6.3.7 AND 6.3.8.

5. ALL WELDS USED IN MEMBERS AND CONNECTIONS IN THE SLRS SHALL BE MADE WITH A FILLER METAL THAT CAN PRODUCE WELDS THAT HAVE A MINIMUM CHARPY V-NOTCH TOUGNESS OF 20 FT-LB AT 0 °F, AS DETERMINED BY THE APPROPRIATE AWS A5 CLASSIFICATION OR MANUFACTURER CERTIFICATION.

6. USE THE MINIMUM SIZE OF WELDING IN ACCORDANCE WITH AISC 360-16 SECTION J2 AT STEEL-TO-STEEL JOINTS UNLESS A LARGER WELDING SIZE IS SPECIFIED ON THE PLANS.

7. WHERE LENGTH OF WELDING IS NOT SHOWN, IT SHALL BE FULL LENGTH OF JOINT. ALL BUTT WELDS SHALL BE COMPLETE PENETRATION WELDS UNLESS OTHERWISE NOTED.

8. THE CONTRACTOR SHALL PROVIDE WELDING PROCEDURE SPECIFICATION (WPS) AND DETAILED SEQUENCE OF WELDING SKETCH FOR REVIEW PRIOR TO STARTING FABRICATION. THE SEQUENCE OF WELDING SHALL BE PLANNED TO MINIMIZE LOCKED IN STRESSES AND DISTORTION. EACH WPS SHALL BE STAMPED WITH AN AWS INSPECTOR'S STAMP INDICATING THAT INSPECTOR'S CERTIFICATION THAT THE WPS CONFORMS TO AWS D1.1 AND D1.8, AND ALL REQUIREMENTS SET FORTH IN THE DRAWINGS AND SPECIFICATIONS. EACH WPS SHALL BE FORMATTED TO FIT ON LETTER SIZED PAPER BUT SHALL BE SUBMITTED ON THE UPPER PORTION OF LEGAL SIZED PAPER ALLOWING FOR AWS INSPECTOR, CONTRACTOR REVIEW, AND DESIGNER REVIEW STAMPS TO BE PLACED ON THE BLANK BOTTOM PORTION OF EACH LEGAL SIZED SHEET.

9. COMPLETE PENETRATION GROOVE WELDS SHALL HAVE A FILLER METAL WITH CHARPY V-NOTCH TOUGHNESS OF 20 FT-LBS AVERAGE AT -20 DEGREES FAHRENHEIT. FOR DEMAND CRITICAL WELDS OF THE SEISMIC LOAD RESISTING SYSTEM SUBJECTED TO SERVICE TEMPERATURES BELOW + 50 °F, THE MINIMUM CHARPY V-NOTCH OF 40 FT-LBS SHALL BE PROVIDED AT A SERVICE TEMPERATURE NOT MORE THAN 20 °F ABOVE THE LOWEST ANTICIPATED SERVICE TEMPERATURE.

10. FACES OF FILLET WELDS NOT EXPOSED TO VIEW SHALL HAVE AS-WELDED SURFACES THAT ARE REASONABLY SMOOTH AND UNIFORM. NO FINISHING OR GRINDING SHALL BE REQUIRED EXCEPT WHERE CLEARANCES OR FIT OF OTHER ITEMS MAY SO NECESSITATE.

11. ALL COMPLETE AND PARTIAL PENETRATION WELDS WHICH ARE EXPOSED TO VIEW SHALL BE GROUND SMOOTH AND FLUSH WITH FINISH SURFACE OF STEEL. HOLES SHALL BE FILLED WITH WELD METAL AND SMOOTHED BY GRINDING OR FILING.

12. FINISH GROOVE PREPARATION THERMAL CUTS BY GRINDING.

13. WELDS SHALL BE TERMINATED AT THE END OF A JOINT IN A MANNER THAT WILL ENSURE SOUND WELDS. THIS SHALL BE DONE BY USE OF EXTENSION BARS AND RUN OFF TABS IF NECESSARY.

14. TO ASSURE THE PROPER AMPERAGE AND VOLTAGE OF THE WELDING PROCESS, A HAND HELD CALIBRATED AMP AND VOLT METER SHALL BE USED. AMPERAGE AND VOLTAGE SHALL BE MEASURED AT THE ARC WITH THIS EQUIPMENT. TRAVEL SPEED AND ELECTRODE STICK OUT SHALL BE VERIFIED TO BE IN COMPLIANCE WITH THE ELECTRODE MANUFACTURER'S RECOMMENDATIONS AND WITH THE APPROVED WELDING PROCEDURE SPECIFICATION.

CAST-IN-PLACE CONCRETE

1. PORTLAND CEMENT SHALL BE ASTM C150 TYPE V UNLESS OTHERWISE NOTED.

2. ALL CONCRETE SHALL BE NORMAL WEIGHT (145 PCF) HARD ROCK TYPE ASTM C33 UNLESS OTHERWISE NOTED AS LIGHT WEIGHT CONCRETE (115 PCF). ASTM C330.

3. CONCRETE SHALL HAVE A MINIMUM COMPRESSIVE STRENGTH (f'c) AT 28 DAYS AS FOLLOWS, UNLESS OTHERWISE NOTED:
A. FLAGPOLE-TYPE FOUNDATIONS: 4,000 PSI UNLESS OTHERWISE NOTED.
B. SLAB-ON-GRADE: 4,000 PSI UNLESS OTHERWISE NOTED.

4. CONCRETE MIXES SHALL BE DESIGNED BY A QUALIFIED TESTING LABORATORY, BEARING A REGISTERED CIVIL ENGINEER'S STAMP, AND REVIEWED AND APPROVED BY THE SEOR PRIOR TO USE.

5. MAXIMUM RATIO OF WATER TO CEMENTITIOUS MATERIALS, BY WEIGHT, SHALL BE 0.45 UNLESS OTHERWISE NOTED. USE MINIMUM 6 SACKS OF CEMENT PER CUBIC YARD OF CONCRETE.

6. ALL CONSTRUCTION JOINTS SHALL BE KEYED AND SHALL BE THOROUGHLY CLEANED. SEE CAST-IN-PLACE CONCRETE NOTE 10.

7. THE CONTRACTOR SHALL SUBMIT THE PROPOSED LOCATION OF ALL CONSTRUCTION JOINTS TO THE ENGINEER FOR REVIEW PRIOR PLACING OF CONCRETE. POUR JOINTS SHALL BE LOCATED TO MINIMIZE EFFECTS OF SHRINKAGE AS WELL AS PLACED AT POINTS OF LOW STRESS. REFER TO ACI 318, SEC. 26.5.6.

8. CONCRETE COVERAGE OF REINFORCING STEEL SHALL BE AS FOLLOWS, UNLESS OTHERWISE NOTED:
A. CONCRETE CAST AGAINST AND PERMANENTLY EXPOSED TO EARTH: 3"
B. CONCRETE EXPOSED TO EARTH OR WEATHER:
· #6 THROUGH #18 REBAR: 2"
· #5 REBAR, W31 OR D31 WIRE, AND SMALLER: 1 1/2"
C. CONCRETE NOT EXPOSED TO WEATHER OR IN CONTACT WITH GROUND:
· SLABS, WALLS AND JOISTS (#11 REBAR AND SMALLER): 1"
· BEAMS AND COLUMNS: 1-1/2"
D. SLABS-ON-GRADE: MID-DEPTH

9. ALL EXPOSED CONCRETE EDGES SHALL BE FORMED WITH A 3/4" CHAMFER UNLESS OTHERWISE NOTED.

10. ALL NEW CONCRETE PLACED AGAINST HARDENED CONCRETE SHALL BE PREPARED PER THE FOLLOWING PROCEDURE:
A. ROUGHEN HARDENED SURFACE TO AN AMPLITUDE OF 1/4" WITH BUSH HAMMER, SAND BLASTING, OR OTHER APPROVED METHOD.
B. CLEAN SURFACES OF DUST AND DEBRIS USING CLEAN COMPRESSED AIR AND WATER.
C. THE SURFACE OF ALL HORIZONTAL CONSTRUCTION JOINTS SHALL BE CLEANED AND ROUGHED BY EXPOSING CLEAN AGGREGATE SOLIDLY EMBEDDED IN MORTAR MATRIX. IN THE EVENT THAT THE CONTACT SURFACE BECOMES COATED WITH EARTH, SAWDUST, ETC., AFTER BEING CLEANED, THE ENTIRE SURFACE SO COATED SHALL BE RECLEANED.
D. REFER TO OTHER NOTES FOR DUST CONTROL DURING CONSTRUCTION.
E. BONDING AGENTS ARE NOT ACCEPTABLE OR A SUBSTITUTE FOR PROCEDURES A, B. AND C.

11. BONDING AGENT WHEN SPECIFIED SHALL BE CHEMREX CONCRESIVE LIQUID LPL, OR SIKA ARMATEC 110 EPOCEM, OR APPROVED EQUAL AND SHALL BE APPLIED FOLLOWING THE MANUFACTURER'S RECOMMENDATIONS.

12. THE NOMINAL MAXIMUM SIZE OF COARSE AGGREGATES SHALL BE 1" UNLESS OTHERWISE NOTED.

13. ALL CRACKS WIDER THAN 1/64" IN NEW CONCRETE APPEARING WITHIN 6 MONTHS OF CONCRETE PLACEMENT SHALL BE REPAIRED USING EPOXY ADHESIVE INJECTION BY THE CONTRACTOR AT NO COST TO THE OWNER.

14. CONCRETE SHALL BE MIXED, PLACED AND CURED PER ACI 318, LATEST EDITION AND PROJECT SPECIFICATION.

REINFORCING STEEL

1. ALL CONCRETE SHALL BE REINFORCED. REINFORCING STEEL SHALL BE NEW DEFORMED STEEL BARS CONFORMING TO ASTM A615, GRADE 60 UNLESS OTHERWISE NOTED.

2. REINFORCING STEEL SHALL BE ACCURATELY PLACED AND FIRMLY SUPPORTED DURING CONCRETE POUR.

3. COMPLETE REINFORCING STEEL PLACEMENT DRAWINGS SHALL BE PREPARED IN ACCORDANCE WITH ACI 315 BY THE CONTRACTOR AND REVIEWED BY THE SEOR AND SHALL BE AVAILABLE ON THE JOB SITE PRIOR TO INSPECTION AND THE PLACING OF CONCRETE.

4. ANCHOR BOLTS, DOWELS AND OTHER EMBEDDED ITEMS SHALL BE SECURELY ANCHORED AND/OR TIED IN PLACE BEFORE CONCRETE IS PLACED.

5. ALL REINFORCING STEEL TO BE WELDED SHALL CONFORM TO ASTM A706, GRADE 60. DEFORMATIONS SHALL BE IN ACCORDANCE WITH ASTM A615.

6. ALL WELDING OF REINFORCING STEEL SHALL CONFORM TO AWS D1.4 AND SHALL BE PERFORMED BY CERTIFIED WELDERS USING AWS A5.5 E80XX FOR ASTM A706 GRADE 60 (TABLE 7.1 AWS D1.4) LOW HYDROGEN MOISTURE RESISTING ELECTRODES UNLESS OTHERWISE NOTED.

7. NO HEATING SHALL BE ALLOWED FOR BENDING OF REINFORCING STEEL UNLESS APPROVED BY THE ENGINEER.

8. ALL MECHANICAL SPLICES SHALL BE APPROVED BY THE SEOR AND INSPECTED DURING CONSTRUCTION AND SHALL HAVE AN ICC-ES/IAPMO NUMBER.

9. ALL HEADED BAR SYSTEMS (TERMINATORS) SHALL BE APPROVED BY THE SEOR AND INSPECTED DURING CONSTRUCTION AND SHALL HAVE AN ICC-ES/IAPMO NUMBER.

10. ALL REINFORCING STEEL INTERRUPTED BY STRUCTURAL STEEL SHALL TERMINATE WITHIN 1" OF STEEL SURFACE WITH A 90° STANDARD HOOK UNLESS OTHERWISE NOTED.

11. ALL REINFORCING BEND SHALL BE MADE COLD. RE-BENDING OR PREVIOUSLY BENT REINFORCING IS NOT PERMITTED.

SHEET NUMBER	SHEET NAME
07-PLUMBING	TOTAL = 7 SHEETS
P-001	NOTES, LEGEND AND ABBREIATIONS
P-002	PLUMBING SCHEDULES
P-101	SITE PLAN
P-111	PLUMBING DEMOLITION FLOOR PLAN
P-211	PLUMBING PROPOSED FLOOR PLAN
P-301	PUMP HOUSE & TRASH ENCLOSURE PLUMBING FLOOR PLAN
P-501	PLUMBING DETAILS
08-ELECTRICAL	TOTAL = 20 SHEETS
E-01	GENERAL NOTES, ABBREVIATIONS, SYMBOLS AND SHEET INDEX
E-01.1	ELECTRICAL SHEET SPECIFICATIONS
E-02	ELECTRICAL SINGLE LINE DIAGRAM
E-02.1	ELECTRICAL SINGLE LINE DIAGRAM FOR THE WORKOUT PARK
E-03	LIGHTING FIXTURE SCHEDULE
E-04	COMMUNITY CENTER LIGHTING ELECTRICAL PLANS
E-04.1	COMMUNITY CENTER POWER ELECTRICAL PLANS
E-04.2	COMMUNITY CENTER PHOTMETRIC STUDY
E-05	OVERALL SITE PLAN
E-05.1	OVERALL SITE ELECTRICAL DEMO PLAN
E-05.2	ELECTRICAL SITE PLAYGROUND LIGHTING PLAN NORTH
E-05.3	ELECTRICAL SITE PLAYGROUND LIGHTING PLAN SOUTH
E-05.4	ELECTRICAL SITE LIGHTING PHOTOMETRIC STUDY
E-06	ENLARGED PUMP STATION DETAILS
E.06.1	OVERALL ELECTRICAL SITE DEMO PLAN
E-07	ELECTRICAL LIGHTING CONTROL DEVICE LAYOUT PLAN
E-07.1	ELECTRICAL LIGHTING CONTROL DETAILS
E-07.2	ELECTRICAL DETAILS
E-08	TITLE 24 COMPLIANCE INDOOR FORMS
E-08.1	TITLE 24 COMPLIANCE OUTDOOR FORMS
09-SKATE	TOTAL = 9 SHEETS
SK1.0	3D PERSPECTIVE
SK2.0	SPECIFICATIONS
SK3.0	INFORMATION PLAN
SK4.0	COLOR PLAN
SK5.0	LAYOUT PLAN
SK6.0	GRADING PLAN
SK7.0	STEEL PLAN
SK8.0	SECTIONS
SK9.0	CONSTRUCTION DETAILS
10-SPLASH PAD & PUMP HOUSE - DESIGN INTENT DRAWINGS FOR BID DATED AUGUST 18, 2023	TOTAL = 15 SHEETS
A-001.	SPRAY ZONE LAYOUT
A-002.	SITE LAYOUT
A-003.	EQUIPMENT ROOM LAYOUT
A-004.	ANCHOR PLAN
C-001	EMBED DETAILS (1)
C-002	EMBED DETAILS (2)
P-001.	PLUMBING LAYOUT (1)
P-002.	PLUMBING LAYOUT (2)
PD-001	PLUMBING DETAILS (1)
PD-002	PLUMBING DETAILS (2)
PD-003	PLUMBING DETAILS (3)
PD-004	PLUMBING DETAILS (4)
ED-001	ELECTRICAL DETAILS
FT-001	FEATURE DETAILS
SP-001	SPECIFICATIONS
11-SHADE CANOPY DRAWINGS - DESIGN INTENT DRAWINGS FOR BID DATED MAY 22, 2023	TOTAL = 3 SHEETS
1001	STRUCTURE 1
1002	STRUCTURE 2
1003	STRUCTURE 3
TOTAL SHEETS: 156	

DRAWING INDEX

SHEET NUMBER	SHEET NAME
01-GENERAL	TOTAL = 12 SHEETS
G-000	COVER
G-001	PROJECT INFORMATION
G-002	DRAWING INDEX & STRUCTURAL GENERAL NOTES
G-003	GENERAL NOTES
G-004	BUILDING CODE PLAN - FIRE LIFE SAFETY
G-005	CAL GREEN NON-RESIDENTIAL CHECKLIST 1 OF 3
G-006	CAL GREEN NON-RESIDENTIAL CHECKLIST 2 OF 3
G-007	CAL GREEN NON-RESIDENTIAL CHECKLIST 3 OF 3
G-010	ACCESSIBILITY COMPLIANCE NOTES
G-011	ACCESSIBLE SITE & PARKING DETAILS
G-012	ACCESSIBLE FIXTURES AND SIGNAGE
G-013	PHOTOS (FOR REFERENCE ONLY)
02-CIVIL	TOTAL = 18 SHEETS
C-100	TITLE SHEET
C-110	TOPOGRAPHIC SURVEY
C-200	DEMOLITION PLAN
C-300	GRADING PLAN 1
C-301	GRADING PLAN 2
C-302	GRADING PLAN 3
C-303	GRADING PLAN 4
C-304	GRADING PLAN 5
C-310	GRADING DETAILS
C-311	GRADING DETAILS
C-401	EROSION CONTROL PLAN
C-402	EROSION CONTROL PLAN
C-403	EROSION CONTROL PLAN
C-404	EROSION CONTROL PLAN
C-410	EROSION CONTROL DETAILS
C-500	TITLE SHEET
C-510	UTILITY PLAN
C-520	DETAILS
03-LANDSCAPE	TOTAL = 23 SHEETS
LT-001	LANDSCAPE TITLE SHEET
LD-101	LANDSCAPE DEMO PLAN
LPPI-101	LANDSCAPE PRESRVATION - PLANT & IRRIGATION PLAN & NOTES
LH-101	LANDSCAPE HARDSCAPE PLAN & DETAILS AESTHETICS
LC-102	LANDSCAPE CONSTRUCTION PLAN - SITE FURNITURE, DF
LC-401	LANDSCAPE CONSTRUCTION MATERIALS SCHEDULE
LC-503	CONSTRUCTION DETAILS
LC-504	FURNITURE DETAILS
LC-505	ADULT FITNESS STATIONS
LI-101	IRRIGATION PLAN PART 1
LI-102	IRRIGATION PLAN PART 2
LI-103	IRRIGATION PLAN PART 3
LI-104	IRRIGATION PLAN PART 4
LI-105	IRRIGATION PLAN PART 5
LI-502	IRRIGATION DETAILS
LI-503	IRRIGATION DETAILS
LI-504	IRRIGATION DETAILS
LP-601	IRRIGATION SCHEDULE
LP-101	PLANTING PLAN PART 1
LP-102	PLANTING PLAN PART 2
LP-103	PLANTING PLAN PART 3
LP-104	PLANTING PLAN PART 4
LP-501	PLANTING DETAILS
04-ARCHITECTURE	TOTAL = 35 SHEETS
A-001	OVERALL SITE DEMOLITION PLAN
A-002	SITE DEMOLITION PLAN
A-003	SITE DEMOLITION PLANS
A-101	OVERALL SITE PLAN
A-102	ENLARGED SITE PLAN - COMMUNITY CENTER & SOUTH PARK
A-103	ENLARGED SITE PLANS - SKATE PARK & NORTH PARK
A-104	ENLARGED COMMUNITY CENTER PATIO PLAN
A-111	(E) COMMUNITY CENTER - DEMOLITION PLAN
A-112	(E) COMMUNITY CENTER - DEMOLITION ROOF PLAN
A-113	(E) COMMUNITY CENTER - DEMOLITION RCP
A-114	(E) COMMUNITY CENTER - DEMOLITION EXT. ELEVATIONS
A-201	(E) COMMUNITY CENTER - PROPOSED FLOOR PLAN
A-202	(E) COMMUNITY CENTER - PROPOSED ROOF PLAN
A-203	(E) COMMUNITY CENTER - ROOF FRAMING PLAN
A-210	(E) COMMUNITY CENTER - PROPOSED RCP
A-220	(E) COMMUNITY CENTER - PROPOSED FINISH PLAN & SCHEDULE
A-401	(E) COMMUNITY CENTER - PROPOSED EXT. ELEVATIONS
A-402	(E) COMMUNITY CENTER - EXT. ELEVATIONS - PANELS
A-403	ENLARGED METAL PANEL PLANS
A-404	METAL PANEL DETAILS
A-410	(E) COMMUNITY CENTER - PROPOSED BLDG SECTIONS
A-501	ENLARGED RESTROOMS PLANS & INTERIOR ELEVATIONS
A-502	INTERIOR ELEVATIONS
A-508	SITE DETAILS
A-509	SITE DETAILS
A-600	PLANS, SECTIONS AND DETAILS
A-610	DETAILS - CASEWORK
A-734	DETAILS - MISCELLANEOUS
A-801	PUMP STATION - PLANS & ELEVATIONS
A-802	PUMP STATION - ENLARGED PLANS & BUILDING SECTIONS
A-803	DETAILS - METAL ROOF AT PUMP STATION
A-805	SHADE STRUCTURES - ENLARGED PLANS & ELEVATIONS
A-901	INTERIOR WALL PARTITION TYPES
A-902	DETAILS - DOOR & WINDOWS
A-910	SCHEDULE - DOOR & WINDOW AND DETAILS
05-STRUCTURAL	TOTAL = 7 SHEETS
S-001	GENERAL NOTES
S-002	GENERAL NOTES
S-003	GENERAL NOTES
S-200	PUMP HOUSE FOUNDATION & ROOF PLAN
S-500	TYPICAL CONCRETE DETAILS
S-501	CONCRETE & MASONRY DETAILS
S-502	STEEL DETAILS
06-MECHANICAL	TOTAL = 7 SHEETS
M-001	MECHANICAL GENERAL NOTES, LEGEND AND ABBEREVIATIONS
M-002	MECHANICAL SCHEDULES
M-111	MECHANICAL DEMOLITION FLOOR AND ROOF PLAN
M-201	MECHANICAL PROPOSED FLOOR AND ROOF PLAN
M-501	MECHANICAL DETAILS
M-502	MECHANICAL DETAILS
M-601	TITLE 24 DOCUMENTATION

APPROVAL

CITY APPROVED BY:
DIRECTOR OF PUBLIC WORKS DATE
CITY REVIEWED BY:
SENIOR ENGINEER DATE
SUBMITTED BY:
DATE

CLIENT
Creating a better tomorrow. Together.
CITY OF LANCASTER
44933 FERN AVENUE
LANCASTER, CA 93534

PROJECT NAME
SAMARITAN'S PURSE PARK FORMERLY KNOWN AS EL DORADO PARK RENOVATION

PWCP NO. 24-008

44501 5TH ST EAST
LANCASTER, CA 93535

ENGINEER/ARCHITECT
IDS GROUP
1 PETERS CANYON ROAD, SUITE 130
IRVINE, CA. 92606
TEL: 949-387-8500, FAX: 949-387-0800

STAMP
LICENSED ARCHITECT JOHN JOSEPH SILBER No. C 15573 REN. 7-31-25 STATE OF CALIFORNIA

ISSUE

REV.	DESCRIPTION	DATE
	30% CD SET	12/15/23
	60% CD SET	01/12/24
	90% CD SET	02/26/24
1	CLIENT REVISIONS	04/26/24
2	BID SET	09/10/24
3	BULLETIN #1	10/25/24
4	BULLETIN #1 R1	2/14/25
	COMPOSITE SET	9/24/25

PROJECT IDENTIFICATION
THIS DRAWING WAS CREATED IN REVIT V. 2020 UNLESS OTHERWISE NOTED.
THE ORIGINAL SIZE OF THIS SHEET IS 30" X 42"

THESE DRAWINGS AND SPECIFICATIONS ARE THE PROPERTY AND COPYRIGHT OF IDS GROUP AND SHALL NOT BE USED ON ANY OTHER PROJECT OR LOCATIONS EXCEPT AS DESCRIBED ON THE DRAWINGS, WITHOUT THE WRITTEN AGREEMENT WITH IDS GROUP.

IDS PROJECT NO.	22X099.03
IDS DRAWN BY	MJ
IDS CHECKED BY	MM
IDS APPROVED BY	JS

SHEET TITLE
DRAWING INDEX & STRUCTURAL GENERAL NOTES

SHEET NUMBER
G-002

IDS GROUP - FILE LOCATION: C:\Users\jane.kiguta\Documents\22X099.01 LANC - El DORADO PARK (E) COMMUNITY CENTER RENOVATION_ ARCH_RVT2022_jane.kiguta.rvt PLOT DATE: 9/24/2025 11:25:33 AM USER: Author

GENERAL NOTES

CONTRACTOR OBLIGATIONS FOR MITIGATION MONITORING AND REPORTING PROGRAM

1. THE CONTRACTOR SHALL INSTALL A VISUAL BARRIER (E.G., GREEN MESH FABRIC) ALONG THE PERIMETER OF CONSTRUCTION SITES FOR VERTICAL CONSTRUCTION PROJECTS. THIS REQUIREMENT SHALL BE SUBMITTED TO ARCHITECT AS A CONTRACTOR SUBMITTAL AND VERIFIED BY THE COMMUNITY DEVELOPMENT DEPARTMENT PRIOR TO SITE WORK.

2. DUST CONTROL. THE CONTRACTOR SHALL BE REQUIRED TO COMPLY WITH SCAQMD RULES 402 AND 403, WHICH SHALL ASSIST IN REDUCING SHORT-TERM AIR POLLUTANT EMISSIONS. SCAQMD RULE 402 REQUIRES THAT AIR POLLUTANT EMISSIONS NOT BE A NUISANCE OFF SITE. SCAQMD RULE 403 (TABLES 1, 2, AND 3 OF RULE 403) REQUIRES THAT FUGITIVE DUST BE CONTROLLED WITH THE BEST AVAILABLE CONTROL MEASURES SO THAT THE PRESENCE OF SUCH DUST DOES NOT REMAIN VISIBLE IN THE ATMOSPHERE BEYOND THE PROPERTY LINE OF THE EMISSION SOURCE. THIS REQUIREMENT SHALL RESUBMITTED TO ARCHITECT AS A CONTRACTOR SUBMITTAL AND VERIFIED BY THE COMMUNITY DEVELOPMENT DEPARTMENT PRIOR TO SITE WORK.

3. ARCHITECTURAL COATINGS SHALL BE SELECTED SO THAT THE VOC CONTENT OF THE COATINGS IS COMPLIANT WITH SCAQMD RULE 1113. THIS REQUIREMENT SHALL RESUBMITTED TO ARCHITECT AS A CONTRACTOR SUBMITTAL AND VERIFIED BY THE COMMUNITY DEVELOPMENT DEPARTMENT PRIOR TO COATING WORK.

4. CONTRACTOR TO REDUCE PROJECT CONSTRUCTION AIR QUALITY IMPACTS DURING CONSTRUCTION. THE FOLLOWING SHALL BE IMPLEMENTED BY CONTRACTOR DURING CONSTRUCTION:
   a. WATER ACTIVE SITES AT LEAST TWICE DAILY;• APPLY WATER THREE TIMES DAILY, OR NON-TOXIC SOIL STABILIZERS ACCORDING TO MANUFACTURERS' SPECIFICATIONS, TO ALL UNPAVED PARKING OR STAGING AREAS OR UNPAVED ROAD SURFACES;
   b. ALL TRUCKS HAULING DIRT, SAND, SOIL, OR OTHER LOOSE MATERIALS ARE TO BE COVERED;• PAVE ROAD AND ROAD SHOULDERS;• INSTALL WHEEL WASHERS WHERE VEHICLES ENTER AND EXIT THE CONSTRUCTION SITE ONTO PAVED ROADS OR WASH OFF TRUCKS AND ANY EQUIPMENT LEAVING THE SITE EACH TRIP;
   c. APPLY NON-TOXIC SOIL STABILIZERS ACCORDING TO MANUFACTURERS' SPECIFICATIONS TO ALL INACTIVE CONSTRUCTION AREAS (PREVIOUSLY GRADED AREAS INACTIVE FOR TEN DAYS OR MORE);• SUSPEND ALL EXCAVATING AND GRADING OPERATIONS WHEN WIND SPEEDS(AS INSTANTANEOUS GUSTS) EXCEED 25 MILES PER HOUR;
   d. SWEEP STREETS AT THE END OF THE DAY IF VISIBLE SOIL IS CARRIED ONTO ADJACENT PUBLIC PAVED ROADS;
   e. APPOINT A CONSTRUCTION RELATIONS OFFICER TO ACT AS A COMMUNITY LIAISON CONCERNING ON-SITE CONSTRUCTION ACTIVITY, INCLUDING RESOLUTION OF ISSUES RELATED TO PM10 GENERATION; AND• REQUIRE AEL VEHICLES AND EQUIPMENT TO BE PROPERLY TUNED AND MAINTAINED ACCORDING TO MANUFACTURERS' SPECIFICATIONS.

5. NOISE GENERATING: PROJECT CONSTRUCTION ACTIVITIES SHALL TAKE PLACE BETWEEN THE HOURS OF 7:00 AM AND 8:00 PM ON ANY DAY, AND ARE NOT PERMITTED ON SUNDAYS OR A CITY-RECOGNIZED HOLIDAY. THIS REQUIREMENT IS IDENTIFIED IN SECTION 15.90.050 OF THE CITY OF LANCASTER NOISE ORDINANCE.

6. CONTRACTOR TO INSTALL WINDOW ASSEMBLIES THAT ARE TESTED AND CERTIFIED TO PREVENT THE INTRUSION OF EXTERIOR NOISE SO THAT THE INTERIOR NOISE LEVEL WITH WINDOWS CLOSED, ATTRIBUTABLE TO EXTERIOR SOURCES, SHALL NOT EXCEED 45 DBA CNEL IN ANY HABITABLE ROOM. THIS REQUIREMENT SHALL BE SUBMITTED TO ARCHITECT AS A CONTRACTOR SUBMITTAL.

7. CONTRACTOR TO SUBMIT EVIDENCE TO THE ARCHITECT AND OWNER THAT THE FOLLOWING NOISE REDUCTION MEASURES AS STATED ON THE CONSTRUCTION PLANS AND SPECIFICATIONS ARE BEING IMPLEMENTED:
   a. CONSTRUCTION TRAFFIC SHALL BE LIMITED TO HAUL ROUTES ESTABLISHED BY THE CITY OF LANCASTER.
   b. STATIONARY EQUIPMENT (SUCH AS GENERATORS AND AIR COMPRESSORS) SHALL BE LOCATED AS FAR FROM RESIDENCES, INCLUDING HOTEL ROOMS, AS FEASIBLE.
   c. EQUIPMENT MAINTENANCE AND STAGING AREAS SHALL BE LOCATED AS FAR AWAY FROM RESIDENCES AS FEASIBLE.
   d. CONSTRUCTION EQUIPMENT SHALL BE FITTED WITH MANUFACTURER'S STANDARD, OR BETTER, NOISE-SHIELDING AND MUFFLING DEVICES TO REDUCE NOISE LEVELS TO THE MAXIMUM EXTENT FEASIBLE.
   e. THE PROJECT OWNER/DEVELOPER SHALL DESIGNATE A CONSTRUCTION COMPLAINT MANAGER FOR THE PROJECT. A TELEPHONE CONTACT NUMBER SHALL BE CLEARLY POSTED AT ALL ACTIVE ACCESS POINTS.

CUTTING AND PATCHING

1. THE CONTRACTOR SHALL IN THE WORK OF ALL TRADES, PERFORM ALL CUTTING, PATCHING, REPAIRING, RESTORING AND THE LIKE NECESSARY TO COMPLETE THE WORK AND TO RESTORE ANY DAMAGED OR AFFECTED SURFACES RESULTING FROM THE WORK OF THIS CONTRACT TO THEIR ORIGINAL CONDITION TO THE SATISFACTION OF THE OWNERS AND THE ARCHITECT.

2. CONTRACTOR SHALL BE RESPONSIBLE FOR ALL CUTTING, FITTING, PATCHING, AND FIRE SAFING METHODS REQUIRED TO COMPLETE THE WORK INCLUDING BUT NOT LIMITED TO THE FOLLOWING:
   a. UNCOVERED PORTIONS OF THE WORK USED TO PROVIDE FOR INSTALLATION OF UNSCHEDULED WORK.
   b. REMOVE AND REPLACE DEFECTIVE WORK.
   c. REMOVE AND REPLACE WORK NOT CONFORMING TO REQUIREMENTS OF CONTRACT DOCUMENTS.
   d. PROVIDE ROUTINE PENETRATIONS OF NON-STRUCTURAL SURFACES FOR INSTALLATION OF PIPING AND ELECTRICAL CONDUIT.
   e. REMOVE EXISTING WORK INDICATED IN THE DOCUMENTS AND AS MAY BE REQUIRED TO PERMIT THE PROPER INSTALLATION OF NEW WORK THAT FORMS PART OF HIS CONTRACT. ALL CUTTING,REPAIRING AND/OR PATCHING NECESSARY IN CONNECTION WITH SUCH REMOVALS SHALL BE DONE WITHOUT EXTRA CHARGE, WHETHER OR NOT EVERY ITEM MAY BE SPECIFICALLY DESCRIBED.

3. PROCEDURES FOR NON-STRUCTURAL CUTTING AND PATCHING:
   a. PROVIDE ADEQUATE TEMPORARY SUPPORT AS NECESSARY TO ASSURE THE STRUCTURAL VALUE INTEGRITY OF THE AFFECTED PORTION OF THE WORK.
   b. PROVIDE DEVICES AND METHODS TO PROTECT OTHER PORTIONS OF THE PROJECT FROM DAMAGE.
   c. PROVIDE PROTECTION FROM THE ELEMENTS FOR THAT PORTION OF THE PROJECT WHICH MAY BE EXPOSED BY CUTTING AND PATCHING WORK.
   d. EXECUTE CUTTING BY METHODS WHICH WILL PREVENT DAMAGE TO OTHER WORK, AND WILL PROVIDE PROPER SURFACES TO RECEIVE INSTALLATION OR REPAIRS.
   e. EXECUTE FITTING AND ADJUSTMENT OF PRODUCTS TO PROVIDE A FINISHED INSTALLATION TO COMPLY WITH SPECIFIED PRODUCTS, FUNCTIONS, TOLERANCES AND FINISHES, AND MANUFACTURER'S CRITERIA.
   f. RESTORE WORK WHICH HAS BEEN CUT OR REMOVED. INSTALL NEW PRODUCTS TO PROVIDE COMPLETE WORK IN ACCORDANCE WITH REQUIREMENTS OF CONTRACT DOCUMENTS.
   g. REFINISH ENTIRE SURFACE AS NECESSARY TO PROVIDE AN EVEN FINISH TO MATCH ADJACENT FINISHES.

DEMOLITION

1. CONTRACTOR SHALL PROVIDE A "DISCOVERY PROCESS" TO IDENTIFY POTENTIAL COMPLICATIONS WITHIN THE SCOPE OF WORK, PRIOR TO ANY DEMOLITION.
2. INTEGRITY OF EXISTING CONCRETE FLOOR (ABOVE AND BELOW) SHALL REMAIN INTACT.
3. CONTRACTOR SHALL VERIFY ALL EXISTING CONDITIONS ESPECIALLY PIPES, DUCTS, AND CONDUIT.
4. ALL DEMOLITION WORK SHALL BE IN ACCORDANCE WITH CHAPTER 33 OF THE CALIFORNIA BUILDING CODE, 2022 EDITION.
5. ALL DEMOLITION WORK SHALL BE IN ACCORDANCE WITH THE CALIFORNIA FIRE CODE, 2016 EDITION, SECTION 103.3.3 (INCLUDING ARTICLE 87).
6. THE CONTRACTOR SHALL FIELD SURVEY / AND VERIFY EXISTING CONDITIONS PRIOR TO STARTING ANY WORK.
7. DURING THE DEMOLITION, THE CONTRACTOR SHALL ALWAYS BE AWARE OF THE INTENDED FINAL RENOVATION CONDITIONS OF THE STRUCTURE AND THE REASON THE DEMOLITION WORK IS BEING DONE.
8. THE CONTRACTOR MUST ALLOW FOR ADDITIONAL DEMOLITION THAT MAY NOT BE SHOWN, BUT IS REQUIRED TO ACHIEVE THE FINISHED RESULT, AS SHOWN ON THE DRAWING.
9. DO NOT DISTURB OR DAMAGE IN ANY WAY EXISTING STRUCTURAL ELEMENTS. THE BUILDING HAS TO COMPLY WITH ALL SAFETY REGULATIONS AT ALL TIMES.
10. THE CONTRACTOR SHALL RESTORE TO ITS ORIGINAL CONDITION ANY EXISTING WORK DAMAGED DURING DEMOLITION BUT INDICATED TO REMAIN.
11. ALL REMOVED MATERIALS AND EQUIPMENT WHICH IN THE OPINION OF THE OWNER/ARCHITECT ARE SALVAGEABLE, SHALL REMAIN THE PROPERTY OF THE OWNER. DELIVER SUCH SALVAGED MATERIALS AND EQUIPMENT ON PREMISES AS DIRECTED, NEATLY PILE OR STORE THEM AND PROTECT FROM DAMAGE. DO NOT REUSE MATERIALS AND EQUIPMENT UNLESS SPECIFICALLY INDICATED ON PLANS OR SPECIFIED. REMOVE FROM PREMISES AND DISPOSE OF ALL MATERIALS CONSIDERED BY THE OWNER/ARCHITECT TO BE SCRAP. RECYCLE MATERIALS PER CURRENT JURISDICTIONAL CODE
12. ALL RUBBISH AND DEBRIS RESULTING FROM DEMOLITION AND/OR NEW WORK SHALL BE RECYCLED AND/OR DISPOSED OF OFF-SITE AND SHALL NOT BE ALLOWED TO ACCUMULATE.

CONTRACTOR OBLIGATIONS

1. CONTRACTOR FOR THE PROJECT SHALL BE RESPONSIBLE FOR OBTAINING ALL REQUIRED BUILDING PERMITS PRIOR TO COMMENCING WORK.

2. THE CONTRACTOR SHALL INSURE THAT ALL WORK IS DONE IN A PROFESSIONAL WORK-MAN-LIKE MANNER BY SKILLED MECHANICS AND SHALL REPLACE ANY NEW AND/OR EXISTING MATERIALS OR ITEMS INDICATED TO REMAIN DAMAGED BY ANY CAUSE DURING CONSTRUCTION.

3. THE CONTRACTOR AND/OR SUBCONTRACTOR SHALL, PRIOR TO THE SUBMISSION OF HIS BID OR PERFORMANCE OF WORK, NOTIFY THE OWNER OF ANY WORK CALLED OUT ON THE DRAWINGS OR IN THE SPECIFICATIONS IN HIS TRADE THAT CANNOT BE FULLY GUARANTEED OR WARRANTED FROM DEFECTIVE WORKMANSHIP OR MATERIAL DEFECTS.

4. THE CONTRACTOR SHALL NOTIFY THE ARCHITECT IF DETAILS ARE CONSIDERED UNSOUND, UNSAFE, NOT WATERPROOF, OR NOT WITHIN CUSTOMARY TRADE PRACTICE. IF WORK IS PERFORMED, IT WILL BE ASSUMED THAT THERE IS NO OBJECTIONS TO THE DETAIL. DETAILS ARE INTENDED TO SHOW END RESULT OF DESIGN, MINOR MODIFICATIONS MAY BE REQUIRED TO SUIT JOB CONDITIONS AND CURRENT TRADE PRACTICE AND SHALL BE INCLUDED AS PART OF THIS PROJECT.

5. CONTRACTOR SHALL BE RESPONSIBLE FOR ALL FINISHES AT POINT OF CONNECTIONS FOR ALL WORK (ARCHITECTURAL, STRUCTURAL, MECHANICAL AND ELECTRICAL) FINISHES WILL MATCH THOSE SPECIFIED OR EXISTING IN LINE, TEXTURE AND FINISH. SPOT PAINTING IS NOT ACCEPTABLE. NEW FINISHES SHALL BE FROM CORNER TO CORNER, FLOOR TO CEILING, ETC.

6. UNLESS OTHERWISE NOTED, ALL MATERIALS SHALL BE NEW AND OF GOOD QUALITY. WHERE EXISTING MATERIALS ARE INDICATED TO BE SALVAGED, CONTRACTOR SHALL INVENTORY, CLEAN,BOX PROTECT, AND STORE ITEMS FOR REUSE ON THE PROJECT. ITEMS NOT REUSED SHALL BE RETURNED TO OWNER.

7. COORDINATION: THE GENERAL AND EACH SUB CONTRACTOR SHALL BE RESPONSIBLE FOR VERIFICATION AND COORDINATION WITH OTHER SUB CONTRACTORS TO ASSURE COMPLIANCE WITH DRAWINGS AND SPECIFICATIONS, AND THE ACCURATE LOCATION OF ARCHITECTURAL, STRUCTURAL, MECHANICAL AND ELECTRICAL BUILDING ELEMENTS. THEIR REQUIRED OPENINGS CLEARANCES SUPPORT SYSTEMS ARE ALL INTERCONNECTED AND COORDINATED.

8. CONTRACTOR SHALL BE RESPONSIBLE FOR COORDINATING THE WORK OF ALL TRADES AND FOR BEING AWARE OF ALL CONDITIONS THAT AFFECT THEIR WORK. NOTIFY OWNER, IN WRITING, WITHIN 3 WORKING DAYS OF AWARD OF CONTRACT, OF THE PROPOSED DELIVERY SCHEDULE, OF ANY EQUIPMENT, FINISHES OR MATERIAL, FOR WHICH THAT SCHEDULE WILL PREVENT THE INSTALLATION FROM BEING COMPLETED AT THE TIME OF THE SCHEDULED PROJECT COMPLETION.

COORDINATION OF WORK:

- THE CONTRACTORS SHALL PROVIDE AND COORDINATE THE EXACT DIMENSIONS SIZES AND POSITIONS OF ALL SYSTEMS, EQUIPMENT, MOUNTING, AND ATTACHMENTS RELATING TO THE WORK.
- THE CONTRACTOR SHALL PROVIDE AND COORDINATE ALL DIMENSIONS SIZES AND POSITIONS OF OPENINGS IN SLABS AND WALLS NECESSARY TO THE INSTALLATION OF THE WORK.
- ALL EQUIPMENT, CONTROLS AND TERMINATIONS SHALL BE POSITIONED FOR SAFE, DIRECT AND EASY ACCESS.
- IT SHALL BE THE RESPONSIBILITY OF THE CONTRACTOR TO CHECK WITH THE ARCHITECTURAL DRAWINGS BEFORE PROCEEDING WITH INSTALLATION OF CIVIL, STRUCTURAL, MECHANICAL, PLUMBING, AND ELECTRICAL WORK. SHOULD THERE BE ANY DISCREPANCIES BETWEEN THE ARCHITECT'S AND THE ENGINEER'S DRAWINGS AND SPECIFICATIONS THAT WOULD CAUSE A CONFLICT, IT SHALL BE BROUGHT TO THE ARCHITECT'S ATTENTION FOR CLARIFICATION PRIOR TO INSTALLATION OF SAID WORK. ANY WORK INSTALLED IN CONFLICT WITH THE ARCHITECTURAL DRAWINGS SHALL BE CORRECTED BY THE CONTRACTOR AT HIS EXPENSE AND AT NO ADDITIONAL EXPENSE TO THE OWNER OR ARCHITECT.

9. THE CONTRACTOR SHALL VERIFY ALL DIMENSIONS AND CONDITIONS OF EXISTING SITE PRIOR TO BIDDING AND START OF CONSTRUCTION. THE CONTRACTOR SHALL REPORT TO THE ARCHITECT ALL CONDITIONS WHICH PREVENT THE PROPER EXECUTION OF ITS WORK. THE DRAWINGS SHALL NOT BE SCALED.

10. ALL SYMBOLS AND ABBREVIATIONS USED ON THE DRAWINGS ARE CONSIDERED TO BE CONSTRUCTION STANDARDS. IF THE CONTRACTOR HAS QUESTIONS REGARDING ABBREVIATIONS OR THEIR EXACT MEANING, THE ARCHITECT SHALL BE NOTIFIED IN WRITING FOR CLARIFICATION.

11. CONTRACTOR SHALL PROVIDE AND INSTALL ALL STIFFENERS, BRACING, BACK-UP PLATES, AND SUPPORTING BRACKETS REQUIRED FOR THE INSTALLATION OF ALL CASEWORK, STAIR RAILINGS, TOILET ACCESSORIES, PARTITIONS, AND OF ALL WALL MOUNTED OR SUSPENDED MECHANICAL, ELECTRICAL, OR MISC. EQUIPMENT.

12. CONTRACTOR SHALL VERIFY SIZES AND LOCATIONS OF ALL MECHANICAL AND ELECTRICAL PADS AND BASES AS WELL AS POWER OR WATER AND DRAIN INSTALLATIONS WITH EQUIPMENT MANUFACTURERS BEFORE PROCEEDING WITH WORK. CHANGES TO ACCOMMODATE FIELD CONDITIONS OR SUBSTITUTIONS SHALL BE MADE WITHOUT ADDITIONAL CHARGE TO OWNER.

FIRE PROTECTION:

1. IT SHALL BE THE RESPONSIBILITY OF THE CONTRACTOR TO INSTALL PIPING IN SUCH A MANNER AS TO CONFORM TO NEW STRUCTURE, AVOID OBSTRUCTIONS, PRESERVE HEADROOM, KEEP OPENINGS AND NECESSARY PASSAGEWAY CLEAR, AND MAKE ALL EQUIPMENT REQUIRING INSPECTION, MAINTENANCE AND REPAIR, ACCESSIBLE WITHOUT FURTHER INSTRUCTIONS OR EXTRA COST TO THE OWNER.

2. THE CONTRACTOR SHALL PROVIDE PORTABLE FIRE EXTINGUISHERS AS REQUIRED BY CODE AND AUTHORITY HAVING JURISDICTION, AT ALL PORTIONS OF THE BUILDING ON EACH FLOOR. THESE EXTINGUISHERS SHALL BE INSTALLED IN THE LOCATIONS APPROVED BY THE FIRE DEPARTMENT AND THE ARCHITECT.

3. WHERE TESTING LABORATORY DESIGN NUMBERS ARE LISTED FOR FIRE RATED CONSTRUCTION, THE COMPONENTS AND INSTALLATION DETAILS MUST CONFORM WITH THE DESIGN NUMBER SPECIFIED.

RATED ASSEMBLY PENETRATIONS

1. MECHANICAL DUCTS, ETC. PENETRATING FIRE-RATED CEILINGS AND FIRE WALLS SHALL BE CORRESPONDINGLY RATED OR DAMPERED. CABINETS, ELECTRICAL PANELS, LIGHTS, ETC. RECESSED INTO FIRE RATED WALLS OR CEILINGS SHALL BE BACKED WITH CORRESPONDING FIRE-RESISTIVE CONSTRUCTION AS REQUIRED TO MAINTAIN THE INTEGRITY OF THE FIRE PROTECTION.

2. FIRE RESISTIVE ASSEMBLIES FOR PROTECTION OF OPENINGS SHALL COMPLY WITH 2019 CBC CHAPTER 7.

3. PENETRATION OF FIRE RATED ASSEMBLIES WHICH REQUIRE OPENING PROTECTION SHALL BE FIRE STOPPED. FIRE STOPPING SHALL BE IDENTICAL TO AN APPROVED UNDERWRITERS LABORATORIES (UL) LISTED ASSEMBLY WITH AN "F" OF "T" RATING. PENETRATIONS MUST ALSO CONSIST OF APPROVED MATERIALS FOR THROUGH WALL PENETRATIONS FIRE STOP SYSTMEMS AS PRESCRIBED IN CBC STANDARD 7-5 FIRE RATING FOR FIRE STOP SYSTEMS SHALL BE EQUAL TO THE ASSEMBLY PENETRATED. (709.6, 2019 CBC)

4. SHAFT ENCLOSURES: OPENINGS EXTENDING VERTICALLY THROUGH FLOORS SHALL BE ENCLOSED IN A SHAFT OF 2-HOUR FIRE-RESISTIVE CONSTRUCTION. SHAFTS SHALL INCLUDE A GYPSUM BOARD HORIZONTAL TERMINATION AT BOTTOM, ENGINEERED BY GENERAL CONTRACTOR. PROTECTION FOR STAIRWAYS SHALL BE AS SPECIFIED IN CODE OF JURISDICTION.

GLAZING

1. ALL GLAZING SHALL COMPLY WITH C.P.S.C. 16 C.F.R. AND CBC.

2. GLASS DOORS, ADJACENT PANELS AND ALL GLAZED OPENINGS SHALL BE APPROVED FOR IMPACT HAZARD PER C.B.C. SECTION 2406. PROVIDE IDENTIFICATION OF GLAZING PER SECTION 2406.2

3. PROVIDE TEMPERED GLASS AS REQUIRED BY CBC SECTION 2406 AND BY OTHER APPLICABLE CODES.

SIGNAGE

1. FURNISH AND INSTALL SUPPORTS AND OTHER NECESSARY FINISH MATERIALS FOR A COMPLETE SIGNAGE INSTALLATION. BOTH INTERIOR & EXTERIOR

2. DISABILITY SIGNAGE / IDENTIFICATION
   a. THE INTERNATIONAL SYMBOL OF ACCESSIBILITY SHALL BE THE STANDARD USED TO IDENTIFY FACILITIES THAT ARE ACCESSIBLE TO AND USEABLE BY PHYSICALLY DISABLED PERSONS.
   b. LETTERS AND NUMBERS ON SIGNS HAVE A WIDTH TO HEIGHT RATIO OF BETWEEN 3:5 AND 1:1 AND STROKE WIDTH TO HEIGHT RATIO OF BETWEEN 1:5 AND 1:10.
   c. CHARACTERS AND SYMBOLS SHALL CONTRAST WITH THEIR BACKGROUND, EITHER LIGHT CHARACTERS ON A DARK BACKGROUND OR DARK CHARACTERS ON A LIGHT BACKGROUND.
   d. ALL BUILDING ENTRANCES THAT ARE ACCESSIBLE TO AND USABLE BY PHYSICALLY HANDICAPPED PERSONS SHALL BE IDENTIFIED WITH AT LEAST ONE STANDARD SIGN AND WITH ADDITIONAL DIRECTIONAL SIGNS AS REQUIRED TO BE VISIBLE TO PERSONS ALONG APPROACHING PEDESTRIAN WAYS.
   e. ALL SANITARY FACILITIES WILL BE PROVIDED WITH APPROPRIATE IDENTIFICATION SYMBOLS.

3. AREA AND OCCUPANCY SIGNAGE REQUIREMENTS OCCUPANT LOAD SIGN SHALL BE POSTED IN EACH MEETING ROOM, ASSEMBLY ROOM OR SIMILAR PURPOSE ROOM HAVING AN OCCUPANT LOAD OF 50 OR MORE.

4. EXIT SIGNS SHALL BE POSTED OVER EXITS DOORS SERVING 50 OR MORE AND ALL HAZARDOUS AREAS. MINIMUM LETTER HEIGHT IS 6" AND SHALL CONFORM WITH CBC AND LOCAL CODES. CBC SECTION 1003.2.8 AND UFC SECTION 12113A. SEE ELECTRICAL PLANS FOR LOCATIONS AND FURTHER INFO.

5. AN APPROVED SIGN SHALL BE LOCATED AT EACH FLOOR LEVEL LANDING IN ALL ENCLOSED STAIRWAYS. THE SIGN SHALL INDICATE FLOOR LEVEL, TERMINUS OF THE TOP AND BOTTOM OF THE STAIRWAY, AND THE IDENTIFICATION OF THE STAIRWAY.

EXITS

1. EXIT DOORS SHALL BE OF THE PIVOTED OR SIDE-HINGED SWINGING TYPE. EXIT DOORS SHALL SWING IN THE DIRECTION OF EXIT TRAVEL WHEN THE AREA SERVED HAS AN OCCUPANT LOAD OF 50 OR MORE.

2. EVERY EXIT DOOR SHALL BE OPERABLE FROM THE INSIDE WITHOUT THE USE OF A KEY OR ANY SPECIAL KNOWLEDGE OR EFFORT. NOTE ALSO THAT FLUSH BOLTS OR SURFACE BOLTS ARE PROHIBITED.

3. PANIC HARDWARE SHALL BE PROVIDED ON EXIT DOORS OF ROOMS, CORRIDORS, STAIRWAYS, HANDLING AN OCCUPANT CAPACITY OF 50 OR MORE PERSONS.

4. EXIT SIGNS SHALL BE INSTALLED AT REQUIRED EXIT DOORWAYS AND WHERE OTHERWISE NECESSARY TO CLEARLY INDICATE THE DIRECTION OF EGRESS IN COMPLIANCE WITH THE CODE OF JURISDICTION.

5. EGRESS DOORS SHALL BE SET IN MOTION WHEN SUBJECTED TO A 30 LB. FORCE. THE DOOR SHALL SWING TO THE FULLY OPEN POSITION WHEN AN OPENING FORCE NOT EXCEEDING 15 LBS IS APPLIED TO THE LATCH SIDE.

6. EACH DOOR IN A MEANS OF EGRESS FROM A GROUP 'A' OCCUPANCY SHALL NOT BE PROVIDED WITH A LATCH OR LOCK UNLESS IT IS PANIC HARDWARE OR FIRE EXIT HARDWARE (CBC 1008.1.9).

7. DOOR HANDLES, LOCK AND OTHER OPERATING DEVICES SHALL BE INSTALLED AT A MIN. 34" AND A MAX. 48" A.F.F.

8. EXIT SIGNS SHALL BE CONNECTED TO AN EMERGENCY POWER SYSTEM THAT WILL PROVIDE AN ILLUMINATION OF NOT LESS THAT 90min IN DURATION. IN CASE OF PRIMARY POWER LOSS (CBC 1011.2 - 1011.5.3)

9. THE MEANS OF EGRESS, INCLUDING THE EXIT DISCHARGE, SHALL BE ILLUMINATED AT ALL TIMES THE BUILDING SPACE SERVED BY THE MEANS OF EGRESS IS OCCUPIED.

THERMAL ENVELOPE NOTES

THERMAL INSULATION PERFORMANCE TO MEET LOCAL MINIMUM ENERGY CODES. INSULATION ASSEMBLY, AS TESTED IN ACCORDANCE WITH ASTMC 518, TO PROVIDE A CONTINUOUS THERMAL PERFORMANCE RATING AT EXTERIOR PERIMETER OF NEW WORK. PROVIDE ASSEMBLY THICKNESS TO MEET THERMAL RESISTANCE 'R' VALUE AS INDICATED BUT NO LESS THAN THE CODE. MINIMUM THERMAL RESISTANCE VALUES AS FOLLOWING:

- R-36 AT CEILING AND ATTIC SPACES
- R-19 AT EXTERIOR WALLS
- R-11 AT INTERIOR WALLS WHERE INSULATION IS USED FOR SOUND CONTROL
- R-13 AT FLOOR CRAWL SPACES

THERMAL ENVELOPE NOTES

1. DURING CONSTRUCTION OF THIS SCOPE OF WORK, CONTRACTORS MUST COMPLY AS APPLICABLE TO CCR TITLE 24 CALIFORNIA FIRE CODE CHAPTER 33 FIRE SAFETY DURING CONSTRUCTION AND DEMOLITION.

2. ENSURE EXITS PROVIDE FREE AND UNOBSTRUCTED EGRESS. PERSONNEL RECEIVE TRAINING IF ALTERNATIVE EXITS MUST BE DESIGNATED. BUILDING/AREAS UNDER CONSTRUCTION MUST MAINTAIN ESCAPE FACILITIES FOR CONSTRUCTION WORKERS AT ALL TIMES. MEANS OF EGRESS IN CONSTRUCTION AREAS ARE INSPECTED DAILY.

3. FIRE ALARM, DETECTION & SUPPRESSION SYSTEMS ARE NOT TO BE IMPAIRED. A TEMPORARY BUT EQUIVALENT SYSTEM SHALL BE PROVIDED WHEN ANY FIRE SYSTEM IS IMPAIRED. TEMPORARY SYSTEMS MUST BE INSPECTED AND TESTED MONTHLY.

4. PROVIDE ADDITIONAL FIRE-FIGHTING EQUIPMENT AND USE TRAINIED PERSONNEL. CONTRACTOR TO TRAIN STAFF ON LOCATION OF AFS SHUT OFF VALVES SERVING PROJECT AREA.

5. SMOKING SHALL BE PROHIBITED AT ALL TIMES, IN OR ADJACENT TO ALL CONSTRUCTION AREAS. NO SMOKING ON STATION.

6. DEVELOP AND ENFORCE STORAGE, HOUSEKEEPING, AND DEBRIS REMOVAL PRACTICES THAT REDUCE THE FLAMMABLE AND COMBUSTIBLE FIRE LOAD OF THE BUILDING TO THE LOWEST LEVEL NECESSARY FOR DAILY OPERATIONS COMPLY WITH CHAPTER 33 FIRE SAFETY DURING CONSTRUCTION.

7. INCREASE SURVEILLANCE OF BUILDINGS, AND EQUIPMENT WITH SPECIAL ATTENTION TO EXCAVATIONS, CONSTRUCTION AREAS, CONSTRUCTION STORAGE, AND FIELD OFFICES.

8. CONDUCT ORGANIZATION-WIDE SAFETY EDUCATION PROGRAMS TO ENSURE AWARENESS OF ANY LIFE SAFETY CODE DEFICIENCIES, CONSTRUCTION HAZARDS AND INTERIM LIFE SAFETY MEASURES.

9. PROVIDE TEMPORARY DIRECTIONAL SIGNAGE APPROVED BY THE OWNER'S FACILITY REPRESENTATIVE/ PROJECT MANAGER, REFER TO G-001

GENERAL

THESE PLANS ARE THE PROPERTY OF IDS GROUP INC., AND ARE NOT TO BE USED FOR ANY OTHER THAN THE LOCATION SHOWN HEREON.

1. NO CHANGES ARE TO BE MADE ON THESE PLANS WITHOUT THE KNOWLEDGE AND CONSENT OF THE ARCHITECT OR ENGINEER WHOSE SIGNATURE APPEARS HEREON.

2. DO NOT SCALE DRAWINGS. ALL DIMENSIONS ARE TO FACE OF CONCRETE, FACE OF CONCRETE MASONRY UNITS, CENTERLINE OF COLUMNS AND BEAMS, OR FACE OF STUDS, UNLESS OTHERWISE NOTED. FINISH FLOOR ELEVATIONS ARE TO TOP OF CONCRETE SLAB OR TOP OF INTERIOR PAVING UNLESS OTHERWISE NOTED.

3. ALL LEVELS REFERENCE POINTS ARE TAKEN FROM TOP OF SHEATHING OR TOP OF CONC. SLAB/COMBO DECKING. DIMENSIONS ON ELEVATIONS, SECTIONS AND WALL SECTIONS ARE REFERENCED TO THESE POINTS, UNLESS NOTED.

4. NO SUBSTITUTIONS WILL BE ALLOWED WITHOUT PRIOR WRITTEN APPROVAL. REQUEST FOR SUBSTITUTIONS SHALL BE IN ACCORDANCE WITH THE SPECIFICATIONS OF SHEETS G-901,902 , 903 AND ETC.
   - THESE DRAWINGS DO NOT CONTAIN THE NECESSARY COMPONENTS FOR CONSTRUCTION SAFETY.
   - ALL CONSTRUCTION SHALL BE PERFORMED IN ACCORDANCE WITH THE STATE CONSTRUCTION SAFETY ORDERS ENFORCED BY THE STATE DIVISION OF INDUSTRIAL SAFETY.

CODES

CONSTRUCTION SHALL COMPLY WITH APPLICABLE EDITION OF CALIFORNIA BUILDING CODE, ALL APPLICABLE LOCAL, STATE AND FEDERAL CODES, ORDINANCES, LAWS, REGULATIONS AND PROTECTIVE COVENANTS GOVERNING THE WORK. IN CASE OF CONFLICTS, THE MORE STRINGENT REQUIREMENT SHALL GOVERN.

PERMIT

1. THE CONSTRUCTION OR DEMOLITION OF ANY BUILDING, STRUCTURE,USING SCAFFOLDING OR FALSEWORK MORE THAN 3 STORIES OR 36'-0" IN HEIGHT, REQUIRES A PERMIT FROM THE STATE OF CALIFORNIA DIVISION OF INDUSTRIAL SAFETY PRIOR TO THE ISSUANCE OF A BUILDING PERMIT. (1PC.B.9)

2. A PERMIT FROM THE DEPARTMENT OF PUBLIC WORKS IS REQUIRED FOR A PROTECTION FENCE OR CANOPY ON OR OVER ANY STREET OR PUBLIC SPACE. PROTECTION OF PEDESTRIANS DURING CONSTRUCTION SHALL BE PROVIDED PER C.B.C. SECTION 3303.

3. ALL ROOMS ARE REQUIRED TO BE MARKED WITH APPROVED SIGNAGE.

4. OBTAIN PERMIT FROM CITY ENGINEER PRIOR TO DOING ANY SIDEWALK AND CURB WORK.

5. SEPARATE PERMITS SHALL BE OBTAINED FOR SIGNS, FENCES, TRASH ENCLOSURES, RETAINING WALLS, PLANTERS, AND POOLS.

7. THE DEFERRED SUBMITTAL ITEMS SHALL NOT BE INSTALLED UNTIL THEIR DESIGN AND SUBMITTAL DOCUMENTS HAVE BEEN APPROVED BY THE BUILDING OFFICIAL. REFER TO SHEET G-001 FOR LIST OF DEFERRED SUBMITTALS.

METAL WORK

1. ALL METAL FRAMING MEMBERS SHALL BE ARRANGED AND SPACED AS TO PERMIT INSTALLATION OF PIPE CONDUITS AND DUCTWORK WITH A MINIMUM OF CUTTING. SHAFT WALLS SHALL BE PROVIDED WITH NECESSARY FRAMES, BRACING, AND SEALANT AROUND THE OPENING.

2. CONTACT BETWEEN DISSIMILAR METAL SHALL BE PROTECTED.

GRANT FUNDING REQUIREMENTS

THIS PROJECT IS FUNDED IN PART WITH A STATE OF CALIFORNIA'S OFFICE OF GRANTS AND LOCAL SERVICES (OGALS) GRANT. THE CONTRACTOR AND ANY SUBCONTRACTORS SHALL COMPLY WITH THE REQUIREMENTS INCLUDED IN THE AGREEMENT NO. C9803058 INCLUDED IN THE APPENDIX OF THESE SPECIFICATIONS.

ALL COSTS ASSOCIATED WITH GRANT FUNDING COMPLIANCE SHALL BE INCLUDED WITH OTHER ITEMS OF WORK. NO SEPARATE PAYMENT SHALL BE MADE."

GREENHOUSE GAS EMISSIONS REDUCTION AND CARBON SEQUESTRATION.

IF YOUR PROJECT INVOLVES TREE PLANTING, FOLLOW THE INSTRUCTIONS BELO

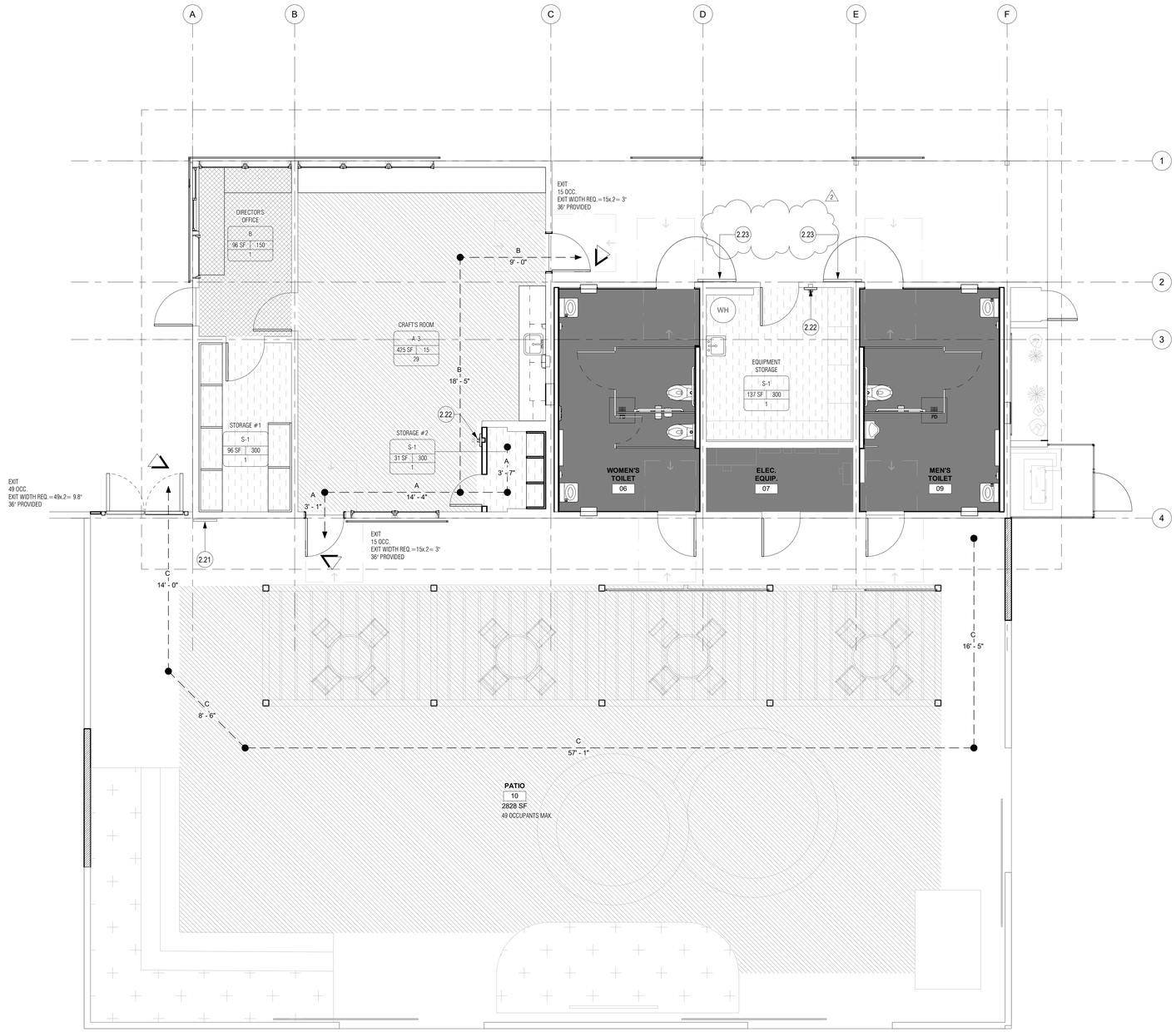

N

EGRESS PLAN | 1/4" = 1'-0" | 1

GENERAL NOTES

1. WHERE EXISTING RATED CONSTRUCTION IS SHOWN TO REMAIN, CONCEALED CONDITIONS ARE OFTEN ENCOUNTERED PRIOR TO START OF CONSTRUCTION. THE CONTRACTOR IS REQUESTED TO CONFIRM AS-BUILT FIELD CONDITIONS AS DOCUMENTED. SHOULD UPGRADE TO EXISTING RATED ASSEMBLIES BE REQUIRED, CONTRACTOR TO INFORM ARCHITECT IN WRITING PRIOR TO PROCEEDING WITH THE WORK.

2. SEE REFLECTED CEILING PLAN FOR ILLUMINATED EXIT SIGN LOCATIONS.

3. THE MEANS OF EGRESS SERVING A ROOM OR SPACE SHALL BE ILLUMINATED AT ALL TIMES THAT THE ROOM OR SPACE IS OCCUPIED. (CBC-1008.2)

4. THE MEANS OF EGRESS ILLUMINATION LEVEL SHALL BE NOT LESS THAN 1-FOOT CANDLE (11 LUX) AT THE WALKING SURFACE LEVEL.

5. THE POWER SUPPLY FOR MEANS OF EGRESS ILLUMINATION SHALL NORMALLY BE PROVIDED BY THE PREMISES' ELECTRICAL SUPPLY (CBC 1008.3).

6. THE EMERGENCY POWER SYSTEM SHALL PROVIDE POWER FOR THE DURATION OF NOT LESS THAN 90 MINUTES AND SHALL CONSIST OF STORAGE BATTERIES, UNIT EQUIPMENT OR AN ON-SITE GENERATOR. (CBC 1008.3.4)

7. PORTABLE FIRE EXTINGUISHERS SHALL BE INSTALLED IN LOCATIONS NOTED ON CFC 906.1.

KEYNOTES

NO.	DESCRIPTION
2.21	POSTED OCCUPANCY SIGN, 49 MAX
2.22	SEMI RECESSED FIRE EXTINGUISHER - SEE DETAIL 3/A-734
2.23 (2)	GC TO PROVIDE LOCK AT PUBLIC-FACING RESTROOM DOORS FOR USE DURING PRE-SCHOOL HOURS

OCC. LOAD CALCULATIONS TABLE

NUMBER	NAME	OCC. TYPE	AREA	LOAD FACTOR	OCCUPANT LOAD
01	DIRECTOR'S OFFICE	B	96 SF	150 SF	0.6
02	STORAGE #1	S-1	96 SF	300 SF	0.3
03	CRAFTS RM	A-3	436 SF	15 SF	29.0
04	KITCHEN	A-3	53 SF	15 SF	3.5
05	STORAGE #2	S-1	27 SF	300 SF	0.1
06	WOMEN'S TOILET	B	188 SF	0 SF	
07	ELEC. EQUIP.	S-1	58 SF	300 SF	0.2
08	EQUIPMENT STORAGE	S-1	134 SF	300 SF	0.4
09	MEN'S TOILET	B	187 SF	0 SF	
10	PATIO	A-3	2828 SF	15 SF	49 MAX
TOTAL OCCUPANT LOAD					85

EXISTING COMMUNITY CENTER
36 OCCUPANTS <=50 — 1 EXIT REQUIRED, 2 EXITS PROVIDED

PATIO
49 OCCUPANTS <=50 — 1 EXIT REQUIRED, 1 EXIT PROVIDED

PATH OF TRAVEL ANALYSIS

PATH NAME	DISTANCE TRAVELED
A	20' - 11"
B	27' - 5"
C	96' - 0"

PER TABLE 1006.2.1: MAX COMMON PATH OF TRAVEL: 75' FOR A OCCUPANCY
PER TABLE 1017.2: MAX EXIT ACCESS TRAVEL DISTANCE : 200 FOR A OCCUPANCY

PLUMBING FIXTURE CALCULATIONS

PLUMBING FIXTURE REQUIREMENTS
2016 CPC TABLE A
OCCUPANT LOAD FACTOR FOR FIXTURE COUNT (A-3 OCCUPANCY) @ 85 OCCUPANTS

85 / 2 = 43 MALE , 43 FEMALE

PLUMBING FIXTURE REQUIREMENT PER CPC TABLE 422.1
REQUIRED:

Occupancy	Water Closets		Urinals	Lavatories		Drinking Fountains	Other
	Male:	Female:	Male:	Male:	Female:		
Group A-3: Assembly	1 per 100	2 per 26-50	1 per 100	1 per 200	1 per 100	1 per 250	1 service sink or laundry tray

	Women		Men		Park	
	Required	Provided	Required	Provided	Required	Provided
Water Closets	2	2	1	2		
Urinals			1	1		
Lavatories	1	2	1	2		
Drinking Fountain					1	1
Service Sink					1	1

PLAN LEGEND

- NEW CONSTRUCTION
- EXISTING CONSTRUCTION TO REMAIN
- MAXIMUM PATH OF TRAVEL
- EXIT
- FIRE EXTINGUISHER
- AREA NAME → LOBBY; AREA SF → 150 SF; E-1 → OCCUPANCY TYPE; 15 → OCCUPANT FACTOR; 10 → OCCUPANT LOAD
- A-3 OCCUPANCY
- S-1 OCCUPANCY
- B-OCCUPANCY
- ACCESSORY

ANNOTATIONS AND DEFINITIONS

N - DENOTES NEW
E - DENOTES EXISTING TO REMAIN
R - DENOTES RELOCATED

APPROVAL

CITY APPROVED BY:
DIRECTOR OF PUBLIC WORKS — DATE
CITY REVIEWED BY:
SENIOR ENGINEER — DATE
SUBMITTED BY:
DATE

CLIENT
LANCASTER
Creating a better tomorrow. Together.
CITY OF LANCASTER
44933 FERN AVENUE
LANCASTER, CA 93534

PROJECT NAME
SAMARITAN'S PURSE PARK FORMERLY KNOWN AS EL DORADO PARK RENOVATION
PWCP NO. 24-008
44501 5TH ST EAST
LANCASTER, CA 93535

ENGINEER/ARCHITECT
IDS
IDS GROUP
1 PETERS CANYON ROAD, SUITE 130
IRVINE, CA 92606
TEL: 949-387-8500, FAX: 949-387-0800

STAMP
REGISTERED ARCHITECT — JOSEPH SITEK — No. C-15573 — REN. 7-31-25 — STATE OF CALIFORNIA

ISSUE

REV.	DESCRIPTION	DATE
	30% CD SET	12/15/23
	60% CD SET	01/12/24
	90% CD SET	02/26/24
1	CLIENT REVISIONS	04/26/24
2	BID SET	09/10/24
3	BULLETIN #1	10/25/24
4	BULLETIN #1 R1	2/14/25
	COMPOSITE SET	9/24/25

PROJECT IDENTIFICATION
THIS DRAWING WAS CREATED IN REVIT V. 2020 UNLESS OTHERWISE NOTED.
THE ORIGINAL SIZE OF THIS SHEET IS 30" X 42"
THESE DRAWINGS AND SPECIFICATIONS ARE THE PROPERTY AND COPYRIGHT OF IDS GROUP AND SHALL NOT BE USED ON ANY OTHER PROJECT OR LOCATIONS EXCEPT AS DESCRIBED ON THE DRAWINGS, WITHOUT THE WRITTEN AGREEMENT WITH IDS GROUP.

IDS PROJECT NO.	22X099.03
IDS DRAWN BY	MJ
IDS CHECKED BY	MM
IDS APPROVED BY	JS

SHEET TITLE
BUILDING CODE PLAN - FIRE LIFE SAFETY

SHEET NUMBER
G-004

IDS GROUP - FILE LOCATION: C:\Users\mratna.jswatertan\Documents\22X099.01 LANC - El DORADO PARK (E) COMMUNITY CENTER RENOVATION_ARCH_CNTR22_mratna.jswatertan.rvt
PLOT DATE: 10/29/2024 4:32:31 PM
USER: Author

2022 CALIFORNIA GREEN BUILDING STANDARDS CODE
NONRESIDENTIAL MANDATORY MEASURES, SHEET 1 (January 2023)

Y = YES
N/A = NOT APPLICABLE
RESPON. PARTY = RESPONSIBLE PARTY (ie: ARCHITECT, ENGINEER, OWNER, CONTRACTOR, INSPECTOR ETC.)

CHAPTER 3
GREEN BUILDING
SECTION 301 GENERAL

301.1 SCOPE. Buildings shall be designed to include the green building measures specified as mandatory in the application checklists contained in this code. Voluntary green building measures are also included in the application checklists and may be included in the design and construction of structures covered by this code, but are not required unless adopted by a city, county, or city and county as specified in Section 101.7.

301.3 NONRESIDENTIAL ADDITIONS AND ALTERATIONS. [BSC-CG] The provisions of individual sections of Chapter 5 apply to newly constructed buildings, building additions of 1,000 square feet or greater, and/or building alterations with a permit valuation of $200,000 or above (for occupancies within the authority of California Building Standards Commission). Code sections relevant to additions and alterations shall only apply to the portions of the building being added or altered within the scope of the permitted work.

A code section will be designated by a banner to indicate where the code section only applies to newly constructed buildings [N] or to additions and/or alterations [A]. When the code section applies to both, no banner will be used.

301.3.1 Nonresidential additions and alterations that cause updates to plumbing fixtures only:

Note: On and after January 1, 2014, certain commercial real property, as defined in Civil Code Section 1101.3, shall have its noncompliant plumbing fixtures replaced with appropriate water-conserving plumbing fixtures under specific circumstances. See Civil Code Section 1101.1 *et seq.* for definitions, types of commercial real property affected, effective dates, circumstances necessitating replacement of noncompliant plumbing fixtures, and duties and responsibilities for ensuring compliance.

301.3.2 Waste Diversion. The requirements of Section 5.408 shall be required for additions and alterations whenever a permit is required for work.

301.4 PUBLIC SCHOOLS AND COMMUNITY COLLEGES. (see GBSC)
301.5 HEALTH FACILITIES. (see GBSC)

SECTION 302 MIXED OCCUPANCY BUILDINGS

302.1 MIXED OCCUPANCY BUILDINGS. In mixed occupancy buildings, each portion of a building shall comply with the specific green building measures applicable to each specific occupancy.

SECTION 303 PHASED PROJECTS

303.1 PHASED PROJECTS. For shell buildings and others constructed for future tenant improvements, only those code measures relevant to the building components and systems considered to be new construction (or newly constructed) shall apply.

303.1.1 Initial Tenant improvements. The provisions of this code shall apply only to the initial tenant improvements to a project. Subsequent tenant improvements shall comply with the scoping provisions in Section 301.3 non-residential additions and alterations.

ABBREVIATION DEFINITIONS:

HCD	Department of Housing and Community Development
BSC	California Building Standards Commission
DSA-SS	Division of the State Architect, Structural Safety
OSHPD	Office of Statewide Health Planning and Development
LR	Low Rise
HR	High Rise
AA	Additions and Alterations
N	New

CHAPTER 5
NONRESIDENTIAL MANDATORY MEASURES

DIVISION 5.1 PLANNING AND DESIGN

SECTION 5.101 GENERAL
5.101.1 SCOPE
The provisions of this chapter outline planning, design and development methods that include environmentally responsible site selection, building design, building siting and development to protect, restore and enhance the environmental quality of the site and respect the integrity of adjacent properties.

SECTION 5.102 DEFINITIONS
5.102.1 DEFINITIONS
The following terms are defined in Chapter 2 *(and are included here for reference)*

CUTOFF LUMINAIRES. Luminaires whose light distribution is such that the candela per 1000 lamp lumens does not numerically exceed 25 (2.5 percent) at an angle of 90 degrees above nadir, and 100 (10 percent) at a vertical angle of 80 degrees above nadir. This applies to all lateral angles around the luminaire.

LOW-EMITTING AND FUEL EFFICIENT VEHICLES.
Eligible vehicles are limited to the following:

1. Zero emission vehicle (ZEV), enhanced advanced technology PZEV (enhanced AT ZEV) or transitional zero emission vehicles (TZEV) regulated under CCR, Title 13, Section 1962.
2. High-efficiency vehicles, regulated by U.S. EPA, bearing a fuel economy and greenhouse gas rating od 9 oe 10 as regulated under 40 CFR Section 600 Subpart D.

NEIGHBORHOOD ELECTRIC VEHICLE (NEV). A motor vehicle that meets the definition of "low-speed vehicle" either in Section 385.5 of the Vehicle Code or in 49CFR571.500 (as it existed on July 1, 2000), and is certified to zero-emission vehicle standards.

TENANT-OCCUPANTS. Building occupants who inhabit a building during its normal hours of operation as permanent occupants, such as employees, as distinguished from customers and other transient visitors.

VANPOOL VEHICLE. Eligible vehicles are limited to any motor vehicle, other than a motortruck or truck tractor, designed for carrying more than 10 but not more than 15 persons including the driver, which is maintained and used primarily for the nonprofit work-related transportation of adults for the purpose of ridesharing.

Note: Source: Vehicle Code, Division 1, Section 668

ZEV. Any vehicle certified to zero-emission standards.

SECTION 5.106 SITE DEVELOPMENT
5.106.1 STORM WATER POLLUTION PREVENTION FOR PROJECTS THAT DISTURB LESS THAN ONE ACRE OF LAND. Newly constructed projects and additions which disturb less than one acre of land, and are not part of a larger common plan of development or sale, shall prevent the pollution of storm water runoff from the construction activities through one or more of the following measures:

5.106.1.1 Local ordinance. Comply with a lawfully enacted storm water management and/or erosion control ordinance.

5.106.1.2 Best Management Practices (BMPs). Prevent the loss of soil through wind or water erosion by implementing an effective combination of erosion and sediment control and good housekeeping BMPs.

1. Soil loss BMPs that should be considered for implementation as appropriate for each project include, but are not limited to, the following:
   a. Scheduling construction activity during dry weather, when possible.
   b. Preservation of natural features, vegetation, soil, and buffers around surface waters.
   c. Drainage swales or lined ditches to control stormwater flow.
   d. Mulching or hydroseeding to stabilize disturbed soils.
   e. Erosion control to protect slopes.
   f. Protection of storm drain inlets (gravel bags or catch basin inserts).
   g. Perimeter sediment control (perimeter silt fence, fiber rolls).
   h. Sediment trap or sediment basin to retain sediment on site.
   i. Stabilized construction exits.
   j. Wind erosion control.
   k. Other soil loss BMPs acceptable to the enforcing agency.
2. Good housekeeping BMPs to manage construction equipment, materials, non-stormwater discharges and wastes that should be considered for implementation as appropriate for each project include, but are not limited to, the following:
   a. Dewatering activities.
   b. Material handling and waste management.
   c. Building materials stockpile management.
   d. Management of washout areas (concrete, paints, stucco, etc.).
   e. Control of vehicle/equipment fueling to contractor's staging area.
   f. Vehicle and equipment cleaning performed off site.
   g Spill prevention and control.
   h. Other housekeeping BMPs acceptable to the enforcing agency.

5.106.2 STORMWATER POLLUTION PREVENTION FOR PROJECTS THAT DISTURB ONE OR MORE ACRES OF LAND. Comply with all lawfully enacted stormwater discharge regulations for projects that (1) disturb one acre or more of land, or (2) disturb less than one acre of land but are part of a larger common plan of development sale.

Note: Projects that (1) disturb one acre or more of land, or (2) disturb less than one acre of land but are part of the larger common plan of development or sale must comply with the post-construction requirements detailed in the applicable National Pollutant Discharge Elimination System (NPDES) General permit for Stormwater Discharges Associated with Construction and Land Disturbance Activities issued by the State Water Resources Control Board or the Lahontan Regional Water Quality Control Board (for projects in the Lake Tahoe Hydrologic Unit).

The NPDES permits require postconstruction runoff (post-project hydrology) to match the preconstruction runoff (pre-project hydrology) with the installation of postconstruction stormwater management measures. The NPDES permits emphasize runoff reduction through on-site stormwater use, interception, evapotranspiration, and infiltration through nonstructural controls, such as Low Impact Development (LID) practices, and conversation design measures. Stormwater volume that cannot be addressed using nonstructural practices is required to be captured in structural practices and be approved by the enforcing agency.

Refer to the current applicable permits on the State Water Resources Control Board website at: www.waterboards.ca.gov/constructionstormwater. Consideration to the stormwater runoff management measures should be given during the initial design process for appropriate integration into site development.

5.106.4 BICYCLE PARKING. For buildings within the authority of California Building Standards Commission as specified in Section 103, comply with Section 5.106.4.1. For buildings within the authority of the Division of the State Architect pursuant to Section 105, comply with Section 5.106.4.2

5.106.4.1 Bicycle parking. [BSC-CG] Comply with Sections 5.106.4.1.1 and 5.106.4.1.2; or meet the applicable local ordinance, whichever is stricter.

5.106.4.1.1 Short-term bicycle parking. If the new project or an addition or alteration is anticipated to generate visitor traffic, provide permanently anchored bicycle racks within 200 feet of the visitors' entrance, readily visible to passers-by, for 5% of new visitor motorized vehicle parking spaces being added, with a minimum of one two-bike capacity rack.
Exception: Additions or alterations which add nine or less visitor vehicular parking spaces.

5.106.4.1.2 Long-term bicycle parking. For new buildings with tenant spaces that have 10 or more tenant-occupants, provide secure bicycle parking for 5 percent of the tenant-occupant vehicular parking spaces with a minimum of one bicycle parking facility.

5.106.4.1.3 For additions or alterations that add 10 or more tenant-occupant vehicular parking spaces, provide secure bicycle parking for 5 percent of the tenant vehicular parking spaces being added, with a minimum of one bicycle parking facility.

5.106.4.1.4 For new shell buildings in phased projects provide secure bicycle parking for 5 percent of the anticipated tenant-occupant vehicular parking spaces with a minimum of one bicycle parking facility.

5.106.4.1.5 Acceptable bicycle parking facility for Sections 5.106.4.1.2, 5.106.4.1.3, and 5.106.4.1.4 shall be convenient from the street and shall meet one of the following:

1. Covered, lockable enclosures with permanently anchored racks for bicycles;
2. Lockable bicycle rooms with permanently anchored racks; or
3. Lockable, permanently anchored bicycle lockers.

Note: Additional information on recommended bicycle accommodations may be obtained from Sacramento Area Bicycle Advocates.

5.106.4.2 Bicycle parking. [DSA-SS] For public schools and community colleges, comply with Sections 5.106.4.2.1 and 5.106.4.2.2

5.106.4.2.1 Student bicycle parking. Provide permanently anchored bicycle racks conveniently accessed with a minimum of four two-bike capacity racks per new building.
5.106.4.2.2 Staff bicycle parking. Provide permanent, secure bicycle parking conveniently accessed with a minimum of two staff bicycle parking spaces per new building. Acceptable bicycle parking facilities shall be convenient from the street or staff parking area and shall meet one of the following:

1. Covered, lockable enclosures with permanently anchored racks for bicycles;
2. Lockable bicycle rooms with permanently anchored racks; or
3. Lockable, permanently anchored bicycle lockers.

5.106.5.3 Electric vehicle (EV) charging. [N] Construction to provide electric vehicle infrastructure and facilitate electric vehicle charging shall comply with Section 5.106.5.3.1 and shall be provided in accordance with regulations in the California Building Code and the California Electrical Code.

Exceptions:
1. On a case-by-case basis where the local enforcing agency has determined compliance with this section is not feasible based upon one of the following conditions:
   a. Where there is no local utility power supply
   b. Where the local utility is unable to supply adequate power.
   c. Where there is evidence suitable to the local enforcement agency substantiating the local utility infrastructure design requirements, directly related to the implementation of Section 5.106.5.3, may adversely impact the construction cost of the project.
2. Parking spaces accessible only by automated mechanical car parking systems are not required to comply with this code section

5.106.5.3.1 EV capable spaces.
[N] EV capable spaces shall be provided in accordance with Table 5.106.5.3.1 and the following requirements:
1. Raceways complying with the California Electrical Code and no less that 1-inch (25 mm) diameter shall be provided and shall originate at a service panel or a subpanel(s) serving the area, and shall terminate in close proximity to the proposed location of the EV capable and into a suitable listed cabinet, box,enclosure or equivalent. A common raceway may be used to serve multiple EV charging spaces.
2. A service panel or subpanel (s) shall be provided with panel space and electrical load capacity for a dedicated 208/240 volt, 40-ampere minimum branch circuit for each EV capable space, with delivery of 30-ampere minimum to an installed EVSE at each EVCS.
3. The electrical system and any on-site distribution transformers shall have sufficient capacity to supply full rated amperage at each EV capable space.
4. The service panel or subpanel circuit directory shall identify the reserved overcurrent protective devices space(s) as "EV CAPABLE". The raceway termination location shall be permanently and visibly marked as "EV CAPABLE."

Note: A parking space served by electric vehicle supply equipment or designed as a future EV charging space shall count as at least one standard automobile parking space only for the purpose of complying with any applicable minimum parking space requirements established by an enforcement agency. See vehicle Code Section 22511.2 for further details.

TABLE 5.106.5.3.1

TOTAL NUMBER OF ACTUAL PARKING SPACES	NUMBER OF REQUIRED EV CAPABLE SPACES	NUMBER OF EVCS (EV CAPABLE SPACES PROVIDED WITH EVSE)^2
0-9	0	0
10-25	2	0
26-50	8	2
51-75	13	3
76-100	17	4
101-150	25	6
151-200	35	9
201 AND OVER	20% of total[1]	25% of EV capable spaces[1]

1. Where there is insufficient electrical supply.
2. The number of required EVCS (EV capable spaces provided with EVSE) in column 3 count towards the total number of required EV capable spaces shown in column 2.

5.106.5.3.2 Electric vehicle charging stations (EVCS)
EV capable spaces shall be provided with EVSE to create EVCS in the number indicated in Table 5.106.5.3.1. The EVCS required by Table 5.106.5.3.1 may be provided with EVSE in any combination of Level 2 and Direct Current Fast Charging (DCFC), except that at least one Level 2 EVSE shall be provided.

One EV charger with multiple connectors capable of charging multiple EVs simultaneously shall be permitted if the electrical load capacity required by Section 5.106.5.3.1 for each EV capable space is accumulatively supplied to the EV charger.

The installation of each DCFC EVSE shall be permitted to reduce the minimum number of required EV capable spaces without EVSE by five and reduce proportionally the required electrical load capacity to the service panel or subpanel.

5.106.5.3.3 Use of automatic load management systems (ALMS).
ALMS shall be permitted for EVCS. When ALMS is installed, the required electrical load capacity specified in Section
5.106.5.3.1 for each EVCS may be reduced when serviced by an EVSE controlled by an ALMS. Each EVSE controlled by an ALMS shall deliver a minimum 30 amperes to an EV when charging one vehicle and shall deliver a minimum 3.3 kW while simultaneously charging multiple EVs.

5.106.5.3.4 Accessible EVCS.
When EVSE is installed, accessible EVSC shall be provided in accordance with the *California Building Code*, Chapter 11B, Section 11B-228.3.
Note: For EVCS signs, refer to Caltrans Traffic Operations Policy Directive 13-01 (Zero Emission Vehicle Signs and Pavement Markings) or its successor(s).

5.106.5.4 Electric Vehicle (EV) charging: medium-duty and heavy-duty. [N]
Construction shall comply with section 5.106.5.4.1 to facilitate future installation of electric vehicle supply equipment (EVSE). Construction for warehouses, grocery stores and retail stores with planned off-street loading spaces shall also comply with Section 5.106.5.4.1 for future installation of medium- and heavy-duty EVSE.
Exceptions:
1. On a case-by-case basis where the local enforcing agency has determined compliance with this section is not feasible based upon one of the following conditions:
   a. Where there is no local utility power supply.
   b. Where the local utility is unable to supply adequate power.
   c. Where there is evidence suitable to the local enforcing agency substantiating that additional local utility infrastructure design requirements, directly related to the implementation of Section 5.106.5.3, may adversely impact the construction cost of the project.

When EVSE(s) is/are installed, it shall be in accordance with the *California Building Code*, the *California Electrical Code* and as follows:

5.106.5.4.1 Electric vehicle charging readiness requirements for warehouse, grocery stores and retail stores with planned off-street loading spaces.
[N] In order to avoid future demolition when adding EV charging supply and distribution equipment, spare raceways(s) or busway(s) and adequate capacity for transformers(s), service panels(s) or subpanel(s) shall be installed at the time of construction in accordance with the California Electrical Code. Construction plans and specifications shall include but are not limited to, the following:
1. The transformer, main service equipment and subpanel shall meet the minimum power requirement in Table 5.106.5.4.1 to accommodate the dedicated branch circuits for the future installation of EVSE.
2. The construction documents shall indicate on or more location(s) convenient to the planned offstreet loading space(s) reserved for medium-and heavy-duty ZEV charging cabinets and charging dispensers, and a pathway reserved for routing of conduit from the termination of the raceway(s) or busway(s) to the charging cabinet(s) and dispenser(s) as shown in Table 5.106.5.4.1
3. Raceway(s) or busway(s) originating at a main service panel or a subpanel(s) serving the area where potential future medium-and heavy-duty EVSE will be located and shall terminate in close proximity to the potential future location of the charging equipments for medium- and heavy-duty vehicles.
4. The raceway(s) or busway(s) shall be sufficient size to carry the minimum additional system load to the future location of the charging for medium- and heavy-duty ZEVs as shown in Table 5.106.5.4.1.

TABLE 5.106.5.4.1 RACEWAY CONDUIT AND PANEL POWER REQUIREMENTS FOR MEDIUM- AND HEAVY-DUTY EVSE [N]

BUILDING TYPE	BUILDING SIZE (SQ. FT.)	NUMBER OF OFF-STREET LOADING SPACES	ADDITIONAL CAPACITY REQUIRED (KVA) FOR RACEWAY & BUSWAY AND TRANSFORMER & PANEL
Grocery	10,000 to 90,000	1 or 2	200
		3 or Greater	400
	Greater than 90,000	1 or Greater	400
Retail	10,000 to 135,000	1 or 2	200
		3 or Greater	400
	Greater than 135,000	1 or Greater	400
Warehouse	20,000 to 256,000	1 or 2	200
		3 or Greater	400
	Greater than 256,000	1 or Greater	400

5.106.8 LIGHT POLLUTION REDUCTION. [N]. I Outdoor lighting systems shall be designed and installed to comply with the following:

1. The minimum requirements in the California Energy Code for Lighting Zones 0-4 as defined in Chapter 10, Section 10-114 of the California Administrative Code; and
2. Backlight (B) ratings as defined in IES TM-15-11 (shown in Table A-1 in Chapter 8);
3. Uplight and Glare ratings as defined in California Energy Code (shown in Tables 130.2-A and 130.2-B in Chapter 8) and
4. Allowable BUG ratings not exceeding those shown in Table 5.106.8, [N] or Comply with a local ordinance lawfully enacted pursuant to Section 101.7, whichever is more stringent.

Exceptions: [N]

1. Luminaires that qualify as exceptions in Sections 130.2 (b) and 140.7 of the California Energy Code.
2. Emergency lighting.
3. Building facade meeting the requirements in Table 140.7-B of the California Energy Code, Part 6.
4. Custom lighting features as allowed by the local enforcing agency, as permitted by Section 101.8 Alternate materials, designs and methods of construction.
5. Luminaires with less than 6,200 initial luminaire lumens.

TABLE 5.106.8 [N] MAXIMUM ALLOWABLE BACKLIGHT, UPLIGHT AND GLARE (BUG) RATINGS [1,2]

ALLOWABLE RATING	LIGHTING ZONE LZ0	LIGHTING ZONE LZ1	LIGHTING ZONE LZ2	LIGHTING ZONE LZ3	LIGHTING ZONE LZ4
MAXIMUM ALLOWABLE BACKLIGHT RATING [3]					
Luminaire greater than 2 mounting heights (MH) from property line	N/A	No Limit	No Limit	No Limit	No Limit
Luminaire back hemisphere is 1-2 MH from property line	N/A	B2	B3	B4	B4
Luminaire back hemisphere is 0.5-1 MH from property line	N/A	B1	B2	B3	B3
Luminaire back hemisphere is less than 0.5 MH from property line	N/A	B0	B0	B1	B2
MAXIMUM ALLOWABLE UPLIGHT RATING (U)					
For area lighting [3]	N/A	U0	U0	U0	U0
For all other outdoor lighting,including decorative luminaires	N/A	U1	U2	U3	UR
MAXIMUM ALLOWABLE GLARE RATING [3] **(G)**					
MAXIMUM ALLOWABLE GLARE RATING [3] **(G)**	N/A	G1	G2	G3	G4
MAXIMUM ALLOWABLE GLARE RATING [3] **(G)**	N/A	G0	G1	G1	G2
MAXIMUM ALLOWABLE GLARE RATING [3] **(G)**	N/A	G0	G0	G1	G1
MAXIMUM ALLOWABLE GLARE RATING [3] **(G)**	N/A	G0	G0	G0	G1

1. IESNA Lighting Zones 0 and 5 are not applicable; refer to Lighting Zones as defined in the *California Energy Code* and Chapter 10 of the *California Administrative Code*.

2. For property lines that abut public walkways, bikeways, plazas and parking lots, the property line may be considered to be 5 feet beyond the actual property line for purpose of determining compliance with this section. For property lines that abut public roadways and public transit corridors, the property line may be considered to be the centerline of the public roadway or public transit corridor for the purpose of determining compliance with this section.

3. General lighting luminaires in areas such as outdoor parking, sales or storage lots shall meet these reduced ratings. Decorative luminaries located in these areas shall meet *U*-value limits for "all other outdoor lighting"

5.106.8.1 Facing- Backlight
Luminaries within 2MH of a property line shall be oriented so that the nearest property line is behind the fixture, and shall comply with the backlight rating specified in Table 5.106.8 based on the lighting zone and distance to the nearest point of that property line.
Exception: Corners. If two property lines (or two segments of the same property line) have equidistant point to the luminaire, then the luminaire may be oriented so that the intersection of the two lines (the corner) is directly behind the luminaire. The luminaire shall still use the distance to the nearest points(s) on the property lines to determine the required backlight rating.

5.106.8.2 Facing-Glare.
For luminaires covered by 5.106.8.1, if a property line also exists within or extends into the front hemisphere within 2MH of the luminaire then the luminaire shall comply with the more stringent glare rating specified in Table 5.106.8 based on the lighting zone and distance to the nearest point on the nearest property line within the front hemisphere.

Note: [N]
1.See *also California Building Code*, Chapter 12, Section 1205.6 for college campus lighting requirements for parking facilities and walkways.
2.Refer to Chapter 8 (Compliance Forms, Worksheets and Reference Material) for IES TM-15-11 Table A-1, *California Energy Code* Tables 130.2-A and 130.2-B.
3. Refer to the *California Building Code* for requirements for additions and alterations.

5.106.10 GRADING AND PAVING. Construction plans shall indicate how site grading or a drainage system will manage all surface water flows to keep water from entering buildings. Examples of methods to manage surface water include, but are not limited to, the following:

1. Swales.
2. Water collection and disposal systems.
3. French drains.
4. Water retention gardens.
5. Other water measures which keep surface water away from buildings and aid in groundwater recharge.
Exception: Additions and alterations not altering the drainage path.

5.106.12 SHADE TREES [DSA-SS]. Shade Trees shall be planted to comply with Sections 5.106.12.1, 5.106.12.2, and 5.106.12.3. Percentages shown shall be measured at noon on the summer solstice. Landscape irrigation necessary to establish and maintain tree health shall comply with Section 5.304.6.

5.106.12.1 Surface parking areas. Shade tree plantings, minimum #10 container size or equal, shall be installed to provide shade over 50 percent of the parking area within 15 years.

Exceptions: Surface parking area covered by solar photovoltaic shade structures with roofing materials that comply with Table A5.106.11.2.2 in Appendix A5 shall be permitted in whole or in part in lieu of shade tree planting.

5.106.12.2 Landscape areas. Shade tress plantings, minimum #10 container size or equal shall be installed to provide shade of 20% of the landscape area within 15 years.

Exceptions: Playfields for organized sport activity are not included in the total area calculation.

5.106.12.3. Hardscape areas. Shade tree plantings, minimum #10 container size or equal shall be installed to provide shade over 20 percent of the hardscape area within 15 years.

Exceptions:
1. Walks, hardscape areas covered by solar photovoltaic shade structures or shade structures with roofing materials that comply with Table A5.106.11.2.2 in Appendix A5 shall be permitted in whole or in part in lieu of shade tree planting.
2. Designated and marked play areas of organized sport activity are not included in the total area calculation.

DIVISION 5.2 ENERGY EFFICIENCY

SECTION 5.201 GENERAL
5.201.1 Scope [BSC-CG]. ***California Energy Code [DSA-SS]***. For the purposes of mandatory energy efficiency standards in this code, the California Energy Commission will continue to adopt mandatory building standards.

DIVISION 5.3 WATER EFFICIENCY AND CONSERVATION

SECTION 5.301 GENERAL
5.301.1 Scope. The provisions of this chapter shall establish the means of conserving water use indoors, outdoors and in wastewater conveyance.

SECTION 5.302 DEFINITIONS
5.302.1 Definitions. The following terms are defined in Chapter 2 *(and are included here for reference)*

EVAPOTRANSPIRATION ADJUSTMENT FACTOR (ETAF) [DSA-SS]. An adjustment factor when applied to reference evapotranspiration that adjusts for plant factors and irrigation efficiency, which ae two major influences on the amount of water that needs to be applied to the landscape.

FOOTPRINT AREA [DSA-SS]. The total area of the furthest exterior wall of the structure projected to natural grade, not including exterior areas such as stairs, covered walkways, patios and decks.

METERING FAUCET. A self-closing faucet that dispenses a specific volume of water for each actuation cycle. The volume or cycle duration can be fixed or adjustable.

GRAYWATER. Pursuant to Health and Safety Code Section 17922.12, "graywater" means untreated wastewater that has not been contaminated by any toilet discharge, has not been affected by infectious, contaminated, or unhealthy bodily wastes, and does not present a threat from contamination by unhealthful processing, manufacturing, or operating wastes. "Graywater" includes, but is not limited to wastewater from bathtubs, showers, bathroom washbasins, clothes washing machines and laundry tubs, but does not include waste water from kitchen sinks or dishwashers.

MODEL WATER EFFICIENT LANDSCAPE ORDINANCE (MWELO). The California ordinance regulating landscape design, installation and maintenance practices that will ensure commercial, multifamily and other developer installed landscapes greater than 2500 square feet meet an irrigation water budget developed based on landscaped area and climatological parameters.

MODEL WATER EFFICIENT LANDSCAPE ORDINANCE (MWELO). [HCD] The California model ordinance (California Code of Regulations, Title 23, Division 2, Chapter 2.7), regulating landscape design, installation and maintenance practices. Local agencies are required to adopt the updated MWELO, or adopt a local ordinance at least as effective as the MWELO.

POTABLE WATER. Water that is drinkable and meets the U.S. Environmental Protection Agency (EPA) Drinking Water Standards. See definition in the California Plumbing Code, Part 5.

POTABLE WATER. [HCD] Water that is satisfactory for drinking, culinary, and domestic purposes, and meets the U.S. Environmental Protection Agency (EPA) Drinking Water Standards and the requirements of the Health Authority Having Jurisdiction.

RECYCLED WATER. Water which, as a result of treatment of waste, is suitable for a direct beneficial use or a controlled use that would not otherwise occur [Water Code Section 13050 (n)]. Simply put, recycled water is water treated to remove waste matter attaining a quality that is suitable to use the water again.

SUBMETER. [HCD 1] A secondary device beyond a meter that measures water consumption of an individual rental unit within a multunit residential structure or mixed-use residential and commercial structure. (See Civic Code Section 1954.202 (g) and Water code Section 517 for additional details.)

WATER BUDGET. Is the estimated total landscape irrigation water use which shall not exceed the maximum applied water allowance calculated in accordance with the Department of Water Resources Model Efficient Landscape Ordinance (MWELO).

DISCLAIMER:*THIS DOCUMENT IS PROVIDED AND INTENDED TO BE USED AS A MEANS TO INDICATE AREAS OF COMPLIANCE WITH THE CALIFORNIA GREEN BUILDING STANDARDS (CALGREEN) CODE. DUE TO THE VARIABLES BETWEEN BUILDING DEPARTMENT JURISDICTIONS, THIS CHECKLIST IS TO BE USED ON AN INDIVIDUAL PROJECT BASIS AND MAY BE MODIFIED BY THE END USER TO MEET THOSE INDIVIDUAL NEEDS. THE END USER ASSUMES ALL RESPONSIBILITY ASSOCIATED WITH THE USE OF THIS DOCUMENT, INCLUDING VERIFICATION WITH THE FULL CODE.*

REFERENCE:
https://aiacalifornia.org/calgreen-checklists/

APPROVAL

CITY APPROVED BY:
DIRECTOR OF PUBLIC WORKS DATE
CITY REVIEWED BY:
SENIOR ENGINEER DATE
SUBMITTED BY:
DATE

CLIENT
LANCASTER
Creating a better tomorrow. Together.
CITY OF LANCASTER
44933 FERN AVENUE
LANCASTER, CA 93534

PROJECT NAME
SAMARITAN'S PURSE PARK FORMERLY KNOWN AS EL DORADO PARK RENOVATION
PWCP NO. 24-008
44501 5TH ST EAST
LANCASTER, CA 93535

ENGINEER/ARCHITECT
IDS
IDS GROUP
1 PETERS CANYON ROAD, SUITE 130
IRVINE, CA 92606
TEL: 949-387-8500, FAX: 949-387-0800

STAMP
REGISTERED ARCHITECT
JOSEPH S. WILSON
No. C-15573
REN. 7-31-25
STATE OF CALIFORNIA

ISSUE

REV.	DESCRIPTION	DATE
	30% CD SET	12/15/23
	60% CD SET	01/12/24
	90% CD SET	02/26/24
1	CLIENT REVISIONS	04/26/24
2	BID SET	09/10/24
3	BULLETIN #1	10/25/24
4	BULLETIN #1 R1	2/14/25
	COMPOSITE SET	9/24/25

PROJECT IDENTIFICATION
THIS DRAWING WAS CREATED IN REVIT V. 2020 UNLESS OTHERWISE NOTED.
THE ORIGINAL SIZE OF THIS SHEET IS 30" X 42"

THESE DRAWINGS AND SPECIFICATIONS ARE THE PROPERTY AND COPYRIGHT OF IDS GROUP AND SHALL NOT BE USED ON ANY OTHER PROJECT OR LOCATIONS EXCEPT AS DESORIBED ON THE DRAWINGS, WITHOUT THE WRITTEN AGREEMENT WITH IDS GROUP.

IDS PROJECT NO.	22X099.03
IDS DRAWN BY	MJ
IDS CHECKED BY	MM
IDS APPROVED BY	JS

SHEET TITLE
CAL GREEN NON-RESIDENTIAL CHECKLIST 1 OF 3

SHEET NUMBER
G-005

2022 CALIFORNIA GREEN BUILDING STANDARDS CODE
NONRESIDENTIAL MANDATORY MEASURES, SHEET 2 (January 2023)

Y = YES
N/A = NOT APPLICABLE
RESPON. PARTY = RESPONSIBLE PARTY (ie: ARCHITECT, ENGINEER, OWNER, CONTRACTOR, INSPECTOR ETC.)

SECTION 5.303 INDOOR WATER USE

5.303.1 METERS. Separate submeters or metering devices shall be installed for the uses described in Sections 503.1.1 and 503.1.2.

5.303.1.1 Buildings in excess of 50,000 square feet. Separate submeters shall be installed as follows:

1. For each individual leased, rented or other tenant space within the building projected to consume more than 100 gal/day (380 L/day), including, but not limited to, spaces used for laundry or cleaners, restaurant or food service, medical or dental office, laboratory, or beauty salon or barber shop.
2. Where separate submeters for individual building tenants are unfeasible, for water supplied to the following subsystems:
   a. Makeup water for cooling towers where flow through is greater than 500 gpm (30 L/s).
   b. Makeup water for evaporative coolers greater than 6 gpm (0.04 L/s).
   c. Steam and hot water boilers with energy input more than 500,000 Btu/h (147 kW).

5.303.1.2 Excess consumption. A separate submeter or metering device shall be provided for any tenant within a new building or within an addition that is projected to consume more than 1,000 gal/day.

5.303.3 WATER CONSERVING PLUMBING FIXTURES AND FITTINGS. Plumbing fixtures (water closets and urinals) and fittings (faucets and showerheads) shall comply with the following:

5.303.3.1 Water Closets. The effective flush volume of all water closets shall not exceed 1.28 gallons per flush. Tank-type water closets shall be certified to the performance criteria of the U.S. EPA WaterSense Specification for Tank-Type toilets.

Note: The effective flush volume of dual flush toilets is defined as the composite, average flush volume of two reduced flushes and one full flush.

5.303.3.2 Urinals.

5.303.3.2.1 Wall-mounted Urinals. The effective flush volume of wall-mounted urinals shall not exceed 0.125 gallons per flush.

5.303.3.2.2 Floor-mounted Urinals. The effective flush volume of floor-mounted or other urinals shall not exceed 0.5 gallons per flush.

5.303.3.3 Showerheads. [BSC-CG]

5.303.3.3.1 Single showerhead. Showerheads shall have a maximum flow rate of not more than 1.8 gallons per minute at 80 psi. Showerheads shall be certified to the performance criteria of the U.S. EPA WaterSense Specification for Showerheads.

5.303.3.3.2 Multiple showerheads serving one shower. When a shower is served by more than one showerhead, the combined flow rate of all the showerheads and/or other shower outlets controlled by a single valve shall not exceed 1.8 gallons per minute at 80 psi, or the shower shall be designed to allow only one shower outlet to be in operation at a time.
Note: A hand-held shower shall be considered a showerhead.

5.303.3.4 Faucets and fountains.

5.303.3.4.1 Nonresidential Lavatory faucets. Lavatory faucets shall have a maximum flow rate of not more than 0.5 gallons per minute at 60 psi.

5.303.3.4.2 Kitchen faucets. Kitchen faucets shall have a maximum flow rate of not more than 1.8 gallons per minute at 60 psi. Kitchen faucets may temporarily increase the flow above the maximum rate, but not to exceed 2.2 gallons per minute at 60 psi, and must default to a maximum flow rate of 1.8 gallons per minute at 60 psi.

5.303.3.4.3 Wash fountains. Wash fountains shall have a maximum flow rate of not more than1.8 gallons per minute/20 [rim space (inches) at 60 psi].

5.303.3.4.4 Metering faucets. Metering faucets shall not deliver more than 0.20 gallons per cycle.

5.303.3.4.5 Metering faucets for wash fountains. Metering faucets for wash fountains shall have a maximum flow rate of not more than 0.20 gallons per minute/20 [rim space (inches) at 60 psi].

Note: Where complying faucets are unavailable, aerators or other means may be used to achieve reduction.

5.303.3.4.6 Pre-rinse spray value
When installed, shall meet the requirements in the *California Code of Regulations*, Title 20 (Appliance Efficiency Regulations), Section 1605.1 (h)(4) Table H-2, Section 1605.3 (h)(4)(A), and Section 1607 (d)(7), and shall be equipped with an integral automatic shutoff.

FOR REFERENCE ONLY: The following table and code section have been reprinted from the *California Code of Regulations*, Title 20 (Appliance Efficiency Regulations), Section 1605.1 (h)(4) and Section 1605.3 (h)(4)(A).

TABLE H-2

STANDARDS FOR COMMERCIAL PRE-RINSE SPRAY VALUES MANUFACTURED ON OR AFTER JANUARY 28, 2019

PRODUCT CLASS [spray force in ounce force (ozf)]	MAXIMUM FLOW RATE (gpm)
Product Class 1 (≤ 5.0 ozf)	1.00
Product Class 2 (> 5.0 ozf and ≤ 8.0 ozf)	1.20
Product Class 3 (> 8.0 ozf)	1.28

5.303.4 COMMERCIAL KITCHEN EQUIPMENT.

5.303.4.1 Food Waste Disposers. Disposers shall either modulate the use of water to no more than 1 gpm when the disposer is not in use (not actively grinding food waste/no-load) or shall automatically shut off after no more than 10 minutes of inactivity. Disposers shall use no more than 8 gpm of water.
Note: This code section does not affect local jurisdiction authority to prohibit or require disposer installation.

5.303.5 AREAS OF ADDITION OR ALTERATION. For those occupancies within the authority of the California Building Standards Commission as specified in Section 103, the provisions of Section 5.303.3 and 5.303.4 shall apply to new fixtures in additions or areas of alteration to the building.

5.303.6 STANDARDS FOR PLUMBING FIXTURES AND FITTINGS. Plumbing fixtures and fittings shall be installed in accordance with the *California Plumbing Code*, and shall meet the applicable standards referenced in Table 1701.1 of the *California Plumbing Code* and in Chapter 6 of this code.

SECTION 5.304 OUTDOOR WATER USE

5.304.1 OUTDOOR POTABLE WATER USE IN LANDSCAPE AREAS. Nonresidential developments shall comply with a local water efficient landscape ordinance or the current California Department of Water Resources' Model Water Efficient Landscape Ordinance (MWELO), whichever is more stringent.

Notes:
1. The Model Water Efficient Landscape Ordinance (MWELO) is located in the California Code of Regulations, Title 23, Chapter 2.7, Division 2.
2. MWELO and supporting documents, including a water budget calculator, are available at: https://www.water.ca.gov/.

5.304.6 OUTDOOR POTABLE WATER USE IN LANDSCAPE AREAS. For public schools and community colleges, landscape projects as described in Sections 5.304.6.1 and 5.304.6.2 shall comply with the California Department of Water Resources Model Water Efficient Landscape Ordinance (MWELO) commencing with Section 490 of Chapter 2.7, Division 2, Title 23, *California Code of Regulations*, except that the evapotranspiration adjustment factor (ETAF) shall be 0.65 with an additional water allowance for special landscape areas (SLA) of 0.35.

Exception: Any project with an aggregate landscape area of 2,500 square feet or less may comply with the prescriptive measures contained in Appendix D of the MWELO.

5.304.6.1 Newly constructed landscapes. New construction projects with an aggregate landscape area equal to or greater than 500 square feet.

5.304.6.2 Rehabilitated landscapes. Rehabilitated landscape projects with an aggregate landscape area equal to or greater than 1,200 square feet.

DIVISION 5.4 MATERIAL CONSERVATION AND RESOURCE EFFICIENCY

SECTION 5.401 GENERAL

5.401.1 SCOPE. The provisions of this chapter shall outline means of achieving material conservation and resource efficiency through protection of buildings from exterior moisture, construction waste diversion, employment of techniques to reduce pollution through recycling of materials, and building commissioning or testing and adjusting.

SECTION 5.402 DEFINITIONS

5.402.1 DEFINITIONS. The following terms are defined in Chapter 2 *(and are included here for reference)*

ADJUST. To regulate fluid flow rate and air patterns at the terminal equipment, such as to reduce fan speed or adjust a damper.

BALANCE. To proportion flows within the distribution system, including sub-mains, branches and terminals, according to design quantities.

BUILDING COMMISSIONING. A systematic quality assurance process that spans the entire design and construction process, including verifying and documenting that building systems and components are planned, designed, installed, tested, operated and maintained to meet the owner's project requirements.

ORGANIC WASTE. Food waste, green waste, landscape and pruning wste, nonhazardous wood waste, and food soiled paper waste that is mixed in with food waste.

TEST. A procedure to determine quantitative performance of a system or equipment

SECTION 5.407 WATER RESISTANCE AND MOISTURE MANAGEMENT

5.407.1 WEATHER PROTECTION. Provide a weather-resistant exterior wall and foundation envelope as required by California Building Code Section 1402.2 (Weather Protection), manufacturer's installation instructions or local ordinance, whichever is more stringent.

5.407.2 MOISTURE CONTROL. Employ moisture control measures by the following methods.

5.407.2.1 Sprinklers. Design and maintain landscape irrigation systems to prevent spray on structures.

5.407.2.2 Entries and openings. Design exterior entries and/or openings subject to foot traffic or wind-driven rain to prevent water intrusion into buildings as follows:

5.407.2.2.1 Exterior door protection. Primary exterior entries shall be covered to prevent water intrusion by using nonabsorbent floor and wall finishes within at least 2 feet around and perpendicular to such openings plus at least one of the following:

1. An installed awning at least 4 feet in depth.
2. The door is protected by a roof overhang at least 4 feet in depth.
3. The door is recessed at least 4 feet.
4. Other methods which provide equivalent protection.

5.407.2.2.2 Flashing. Install flashings integrated with a drainage plane.

SECTION 5.408 CONSTRUCTION WASTE REDUCTION, DISPOSAL AND RECYCLING

5.408.1 CONSTRUCTION WASTE MANAGEMENT. Recycle and/or salvage for reuse a minimum of 65% of the non-hazardous construction and demolition waste in accordance with Section 5.408.1.1, 5.408.1.2 or 5.408.1.3; or meet a local construction and demolition waste management ordinance, whichever is more stringent.

5.408.1.1 Construction waste management plan. Where a local jurisdiction does not have a construction and demolition waste management ordinance, submit a construction waste management plan that:

1. Identifies the construction and demolition waste materials to be diverted from disposal by efficient usage, recycling, reuse on the project or salvage for future use or sale.
2. Determines if construction and demolition waste materials will be sorted on-site (source-separated) or bulk mixed (single stream).
3. Identifies diversion facilities where construction and demolition waste material collected will be taken.
4. Specifies that the amount of construction and demolition waste materials diverted shall be calculated by weight or volume, but not by both.

5.408.1.2 Waste Management Company. Utilize a waste management company that can provide verifiable documentation that the percentage of construction and demolition waste material diverted from the landfill complies with this section.

Note: The owner or contractor shall make the determination if the construction and demolition waste material will be diverted by a waste management company.

Exceptions to Sections 5.408.1.1 and 5.408.1.2:

1. Excavated soil and land-clearing debris.
2. Alternate waste reduction methods developed by working with local agencies if diversion or recycle facilities capable of compliance with this item do not exist.
3. Demolition waste meeting local ordinance or calculated in consideration of local recycling facilities and markets.

5.408.1.3 Waste stream reduction alternative. The combined weight of new construction disposal that does not exceed two pounds per square foot of building area may be deemed to meet the 65% minimum requirement as approved by the enforcing agency.

5.408.1.4 Documentation. Documentation shall be provided to the enforcing agency which demonstrates compliance with Sections 5.408.1.1, through 5.408.1.3. The waste management plan shall be updated as necessary and shall be accessible during construction for examination by the enforcing agency.

Notes:

1. Sample forms found in "A Guide to the California Green Building Standards Code (Nonresidential)" located www.dgs.ca.gov/BSC/Resources/Page-Content/Building-Standards-Commission-Resources-List-Folder/CALGreen may be used to assist in documenting compliance with the waste management plan.
2. Mixed construction and demolition debris processors can be located at the California Department of Resources Recycling and Recovery (CalRecycle).

5.408.2 UNIVERSAL WASTE. [A] Additions and alterations to a building or tenant space that meet the scoping provisions in Section 301.3 for nonresidential additions and alterations, shall require verification that Universal Waste items such as fluorescent lamps and ballast and mercury containing thermostats as well as other California prohibited Universal Waste materials are disposed of properly and are diverted from landfills. A list of prohibited Universal Waste materials shall be included in the construction documents.

Note: Refer to the Universal Waste Rule link at: http://www.dtsc.ca.gov/universalwaste/

5.408.3 EXCAVATED SOIL AND LAND CLEARING DEBRIS. 100 percent of trees, stumps, rocks and associated vegetation and soils resulting primarily from land clearing shall be reused or recycled. For a phased project, such material may be stockpiled on site until the storage site is developed.

Exception: Reuse, either on or off-site, of vegetation or soil contaminated by disease or pest infestation.

Notes:

1. If contamination by disease or pest infestation is suspected, contact the County Agricultural Commissioner and follow its direction for recycling or disposal of the material.
2. For a map of know pest and/or disease quarantine zones, consult with the California Department of Food and Agriculture. (www.cdfa.ca.gov)

SECTION 5.410 BUILDING MAINTENANCE AND OPERATIONS

5.410.1 RECYCLING BY OCCUPANTS. Provide readily accessible areas that serve the entire building and are identified for the depositing, storage and collection of non-hazardous materials for recycling, including (at a minimum) paper, corrugated cardboard, glass, plastics, organic waste, and metals or meet a lawfully enacted local recycling ordinance, if more restrictive.

Exception: Rural jurisdictions that meet and apply for the exemption in Public Resources Code 42649.82 (a)(2)(A) et seq. shall also be exempt from the organic waste portion of this section.

5.410.1.1 Additions. All additions conducted within a 12-month period under single or multiple permits, resulting in an increase of 30% or more in floor area, shall provide recycling areas on site.

Exception: Additions within a tenant space resulting in less than a 30% increase in the tenant space floor area.

5.410.1.2 Sample ordinance. Space allocation for recycling areas shall comply with Chapter 18, Part 3, Division 30 of the *Public Resources Code*. Chapter 18 is known as the California Solid Waste Reuse and Recycling Access Act of 1991 (Act).

Note: A sample ordinance for use by local agencies may be found in Appendix A of the document at the CalRecycle's web site.

5.410.2 COMMISSIONING. [N] New buildings 10,000 square feet and over. For new buildings 10,000 square feet and over, building commissioning shall be included in the design and construction processes of the building project to verify that the building systems and components meet the owner's or owner representative's project requirements. Commissioning shall be performed in accordance with this section by trained personnel with experience on projects of comparable size and complexity. For I-occupancies that are not regulated by OSHPD or for I-occupancies and L-occupancies that are not regulated y the California Energy Code Section 100.0 Scope, all requirements in Sections 5.410.2 through 5.410.2.6 shall apply.

Note: For energy-related systems under the scope (Section 100) of the California Energy Code, including heating, ventilation, air conditioning (HVAC) systems and controls, indoor lighting systems and controls, as well as water heating systems and controls, refer to California Energy Code Section 120.8 for commissioning requirements

Commissioning requirements shall include:

1. Owner's or Owner representative's project requirements.
2. Basis of design.
3. Commissioning measures shown in the construction documents.
4. Commissioning plan.
5. Functional performance testing.
6. Documentation and training.
7. Commissioning report.

Exceptions:

1. Unconditioned warehouses of any size.
2. Areas less than 10,000 square feet used for offices or other conditioned accessory spaces within unconditioned warehouses.
3. Tenant improvements less than 10,000 square feet as described in Section 303.1.1.
4. Open parking garages of any size, or open parking garage areas, of any size, within a structure.

Note: For the purposes of this section, unconditioned shall mean a building, area, or room which does not provide heating and or air conditioning.

Informational Notes:

1. IAS AC 476 is an accreditation criteria for organizations providing training and/or certification of commissioning personnel. AC 476 is available to the Authority Having Jurisdiction as a reference for qualifications of commissioning personnel. AC 476 des not certify individuals to conduct functional performance tests or to adjust and balance systems.
2. Functional performance testing for heating, ventilation, air conditioning systems and lighting controls must be performed in compliance with the *California Energy Code*.

5.410.2.1 Owner's or Owner Representative's Project Requirements (OPR). [N] The expectations and requirements of the building appropriate to its phase shall be documented before the design phase of the project begins. This documentation shall include the following:
1. Environmental and sustainability goals.
2. Building sustainable goals.
3. Indoor environmental quality requirements.
4. Project program, including facility functions and hours of operation, and need for after hours operation.
5. Equipment and systems expectations.
6. Building occupant and operation and maintenance (O&M) personnel expectations.

5.410.2.2 Basis of Design (BOD). [N] A written explanation of how the design of the building systems meets the OPR shall be completed at the design phase of the building project. The Basis of Design document shall cover the following systems:

1. Renewable energy systems.
2. Landscape irrigation systems.
3. Water reuse system.

5.410.2.3 Commissioning plan. [N] Prior to permit issuance a commissioning plan shall be completed to document how the project will be commissioned. The commissioning plan shall include the following:
1. General project information.
2. Commissioning goals.
3. Systems to be commissioned. Plans to test systems and components shall include:
   a. An explanation of the original design intent.
   b. Equipment and systems to be tested, including the extent of tests.
   c. Functions to be tested.
   d. Conditions under which the test shall be performed.
   e. Measurable criteria for acceptable performance.
4. Commissioning team information.
5. Commissioning process activities, schedules and responsibilities. Plans for the completion of commissioning shall be included.

5.410.2.4 Functional performance testing. [N] Functional performance tests shall demonstrate the correct installation and operation of each component, system and system-to-system interface in accordance with the approved plans and specifications. Functional performance testing reports shall contain information addressing each of the building components tested, the testing methods utilized, and include any readings and adjustments made.

5.410.2.5 Documentation and training. [N] A Systems Manual and Systems Operations Training are required, including Occupational Safety and Health Act (OSHA) requirements in *California Code of Regulations* (CCR), Title 8, Section 5142, and other related regulations.

5.410.2.5.1 Systems manual. [N] Documentation of the operational aspects of the building shall be completed within the systems manual and delivered to the building owner or representative. The systems manual shall include the following:
1. Site information, including facility description, history and current requirements.
2. Site contact information.
3. Basic operations and maintenance, including general site operating procedures, basic troubleshooting, recommended maintenance requirements, site events log.
4. Major systems.
5. Site equipment inventory and maintenance notes.
6. A copy of verifications required by the enforcing agency or this code.
7. Other resources and documentation, if applicable.

5.410.2.5.2 Systems operations training. [N] A program for training of the appropriate maintenance staff for each equipment type and/or system shall be developed and documented in the commissioning report and shall include the following:
1. System/equipment overview (what it is, what it does and with what other systems and/or equipment it interfaces).
2. Review and demonstration of servicing/preventive maintenance.
3. Review of the information in the Systems Manual.
4. Review of the record drawings on the system/equipment.

5.410.2.6 Commissioning report. [N] A report of commissioning process activities undertaken through the design and construction phases of the building project shall be completed and provided to the owner or representative.

5.410.4 TESTING AND ADJUSTING. New buildings less than 10,000 square feet. Testing and adjusting of systems shall be required for new buildings less than 10,000 square feet or new systems to serve an addition or alteration subject to Section 303.1.

5.410.4.2 (Reserved)

Note: For energy-related systems under the scope (Section 100) of the California Energy Code, including heating, ventilation, air conditioning (HVAC) systems and controls, indoor lighting system and controls, as well as water heating systems and controls, refer to California Energy Code Section 120.8 for commissioning requirements and Sections 120.5, 120.6, 130.4, and 140.9(b)3 for additional testing requirements of specific systems.

5.410.4.2 Systems. Develop a written plan of procedures for testing and adjusting systems. Systems to be included for testing and adjusting shall include at a minimum, as applicable to the project:

1. Renewable energy systems.
2. Landscape irrigation systems.
3. Water reuse systems.

5.410.4.3 Procedures. Perform testing and adjusting procedures in accordance with manufacturer's specifications and applicable standards on each system.

5.410.4.3.1 HVAC balancing. In addition to testing and adjusting, before a new space-conditioning system serving a building or space is operated for normal use, the system shall be balanced in accordance with the procedures defined by the Testing Adjusting and Balancing Bureau National Standards; the National Environmental Balancing Bureau Procedural Standards; Associated Air Balance Council National Standards or as approved by the enforcing agency.

5.410.4.4 Reporting. After completion of testing, adjusting and balancing, provide a final report of testing signed by the individual responsible for performing these services.

5.410.4.5 Operation and maintenance (O & M) manual. Provide the building owner or representative with detailed operating and maintenance instructions and copies of guaranties/warranties for each system. O & M instructions shall be consistent with OSHA requirements in CCR, Title 8, Section 5142, and other related regulations.

5.410.4.5.1 Inspections and reports. Include a copy of all inspection verifications and reports required by the enforcing agency.

DIVISION 5.5 ENVIRONMENTAL QUALITY

SECTION 5.501 GENERAL

5.501.1 SCOPE. The provisions of this chapter shall outline means of reducing the quantity of air contaminants that are odorous, irritating, and/or harmful to the comfort and well-being of a building's installers, occupants and neighbors.

SECTION 5.502 DEFINITIONS

5.502.1 DEFINITIONS. The following terms are defined in Chapter 2 *(and are included here for reference)*

ARTERIAL HIGHWAY. A general term denoting a highway primarily for through traffic usually on a continuous route.

A-WEIGHTED SOUND LEVEL (dBA). The sound pressure level in decibels as measured on a sound level meter using the internationally standardized A-weighting filter or as computed from sound spectral data to which A-weighting adjustments have been made.

1 BTU/HOUR. British thermal units per hour, also referred to as Btu. The amount of heat required to raise one pound of water one degree Fahrenheit per hour, a common measure of heat transfer rate. A ton of refrigeration is 12,000 Btu, the amount of heat required to melt a ton (2,000 pounds) of ice at 32^{0} Fahrenheit.

COMMUNITY NOISE EQUIVALENT LEVEL (CNEL). A metric similar to the day-night average sound level (Ldn), except that a 5 decibel adjustment is added to the equivalent continuous sound exposure level for evening hours (7pm to 10pm) in addition to the 10 dB nighttime adjustment used in the Ldn.

COMPOSITE WOOD PRODUCTS. Composite wood products include hardwood plywood, particleboard and medium density fiberboard. "Composite wood products" does not include hardboard, structural plywood, structural panels, structural composite lumber, oriented strand board, glued laminated timber, timber, prefabricated wood I–joists or finger–jointed lumber, all as specified in California Code of Regulations (CCR), Title 17, Section 93120.1(a).

Note: See CCR, Title 17, Section 93120.1.

DAY-NIGHT AVERAGE SOUND LEVEL (Ldn). The A-weighted equivalent continuous sound exposure level for a 24-hour period with a 10 dB adjustment added to sound levels occurring during nighttime hours (10p.m. to 7 a.m.).

DECIBEL (db). A measure on a logarithmic scale of the magnitude of a particular quantity (such as sound pressure, sound power, sound intensity) with respect to a reference quantity.

ELECTRIC VEHICLE (EV). An automotive-type vehicle for on-road use, such as passenger automobiles, buses, trucks, vans, neighborhood electric vehicles, electric motorcycles, and the like, primarily powered by an electric motor that draws current from a rechargeable storage battery, fuel cell, photovoltaic array, or other source of electric current. Plug-in hybrid electric vehicles (PHEV) are considered electric vehicles. For purposes of the *California Electrical Code*, off-road, self-propelled electric vehicles, such as industrial trucks, hoists, lifts, transports, golf carts, airline ground support equipment, tractors, boats, and the like, are not included.

ELECTRIC VEHICLE CHARGING STATION(S) (EVCSj). One or more spaces intended for charging electric vehicles.

ELECTRIC VEHICLE SUPPLY EQUIPMENT (EVSE). The conductors, including the ungrounded, grounded, and equipment grounding conductors and the electric vehicle connectors, attachment plugs, and all other fittings, devices, power outlets, or apparatus installed specifically for the purpose of transferring energy between the premises wiring and the electric vehicle.

ENERGY EQUIVALENT (NOISE) LEVEL (Leq). The level of a steady noise which would have the same energy as the fluctuating noise level integrated over the time of period of interest.

EXPRESSWAY. An arterial highway for through traffic which may have partial control of access, but which may or may not be divided or have grade separations at intersections.

FREEWAY. A divided arterial highway with full control of access and with grade separations at intersections.

GLOBAL WARMING POTENTIAL (GWP). The radiative forcing impact of one mass-based unit of a given greenhouse gas relative to an equivalent unit of carbon dioxide over a given period of time. Carbon dioxide is the reference compound with a GWP of one.

GLOBAL WARMING POTENTIAL VALUE (GWP VALUE). A 100-year GWP value published by the Intergovernmental Panel on Climate Change (IPCC) in either its Second Assessment Report (SAR) (IPCC, 1995); or its Fourth Assessment A-3 Report (AR4) (IPCC, 2007). The SAR GWP values are found in column "SAR (100-yr)" of Table 2.14.; the AR4 GWP values are found in column "100 yr" of Table 2.14.

HIGH-GWP REFRIGERANT. A compound used as a heat transfer fluid or gas that is: (a) a chlorofluorocarbon, a hdrochlorofluorocarbon, a hydrofluorocarbon, a perfluorocarbon, or any compound or blend of compounds, with a GWP value equal to or greater than 150, or (B) any ozone depleting substance as defined in Title 40 of the Code of Federal Regulations, Part 82, sec.82.3 (as amended March 10, 2009).

LONG RADIUS ELBOW. Pipe fitting installed between two lengths of pipe or tubing to allow a change of direction, with a radius 1.5 times the pipe diameter.

LOW-GWP REFRIGERANT. A compound used as a heat transfer fluid or gas that: (A) has a GWP value less than 150, and (B) is not an ozone depleting substance as defined in Title 40 of the Code of Federal Regulations, Part 82, sec.82.3 (as amended March 10, 2009).

MERV. Filter minimum efficiency reporting value, based on ASHRAE 52.2–1999.

MAXIMUM INCREMENTAL REACTIVITY (MIR). The maximum change in weight of ozone formed by adding a compound to the "Base REactive Organic Gas (ROG) Mixture" per weight of compound added, expressed to hundreths of a gram (g O^3/g ROC).

PRODUCT-WEIGHTED MIR (PWMIR). The sum of all weighted-MIR for all ingredients in a product subject to this article. The PWMIR is the total product reactivity expressed to hundredths of a gram of ozone formed per gram of product (excluding container and packaging).

PSIG. Pounds per square inch, guage.

REACTIVE ORGANIC COMPOUND (ROC). Any compound that has the potential, once emitted, to contribute to ozone formation in the troposphere.

SCHRADER ACCESS VALVES. Access fittings with a valve core installed.

SHORT RADIUS ELBOW. Pipe fitting installed between two lengths of pipe or tubing to allow a change of direction, with a radius 1.0 times the pipe diameter.

SUPERMARKET. For the purposes of Section 5.508.2, a supermarket is any retail food facility with 8,000 square feet or more conditioned area, and that utilizes either refrigerated display cases, or walk-in coolers or freezers connected to remote compressor units or condensing units.

VOC. A volatile organic compound broadly defined as a chemical compound based on carbon chains or rings with vapor pressures greater than 0.1 millimeters of mercury at room temperature. These compounds typically contain hydrogen and may contain oxygen, nitrogen and other elements. See CCR Title 17, Section 94508(a)

Note: Where specific regulations are cited from different agencies such as SCAQMD, ARB, etc., the VOC definition included in that specific regulation is the one that prevails for the specific measure in question.

SECTION 5.504 POLLUTANT CONTROL

5.504.1 TEMPORARY VENTILATION. The permanent HVAC system shall only be used during construction if necessary to condition the building or areas of addition or alteration within the required temperature range for material and equipment installation. If the HVAC system is used during construction, use return air filters with a Minimum Efficiency Reporting Value (MERV) of 8, based on ASHRAE 52.2-1999, or an average efficiency of 30% based on ASHRAE 52.1-1992 Replace all filters immediately prior to occupancy, or, if the building is occupied during alteration, at the conclusion of construction.

5.504.3 Covering of duct openings and protection of mechanical equipment during construction. At the time of rough installation and during storage on the construction site until final startup of the heating, cooling and ventilation equipment, all duct and other related air distribution component openings shall be covered with tape, plastic, sheetmetal or other methods acceptable to the enforcing agency to reduce the amount of dust, water and debris which may enter the system.

DISCLAIMER: *THIS DOCUMENT IS PROVIDED AND INTENDED TO BE USED AS A MEANS TO INDICATE AREAS OF COMPLIANCE WITH THE CALIFORNIA GREEN BUILDING STANDARDS (CALGREEN) CODE. DUE TO THE VARIABLES BETWEEN BUILDING DEPARTMENT JURISDICTIONS, THIS CHECKLIST IS TO BE USED ON AN INDIVIDUAL PROJECT BASIS AND MAY BE MODIFIED BY THE END USER TO MEET THOSE INDIVIDUAL NEEDS. THE END USER ASSUMES ALL RESPONSIBILITY ASSOCIATED WITH THE USE OF THIS DOCUMENT, INCLUDING VERIFICATION WITH THE FULL CODE.*

REFERENCE:
https://aiacalifornia.org/calgreen-checklists/

APPROVAL

CITY APPROVED BY:
DIRECTOR OF PUBLIC WORKS DATE
CITY REVIEWED BY:
SENIOR ENGINEER DATE
SUBMITTED BY:
DATE

CLIENT
LANCASTER
Creating a better tomorrow. Together.
CITY OF LANCASTER
44933 FERN AVENUE
LANCASTER, CA 93534

PROJECT NAME
SAMARITAN'S PURSE PARK FORMERLY KNOWN AS EL DORADO PARK RENOVATION
PWCP NO. 24-008
44501 5TH ST EAST
LANCASTER, CA 93535

ENGINEER/ARCHITECT
IDS
IDS GROUP
1 PETERS CANYON ROAD, SUITE 130
IRVINE, CA 92606
TEL: 949-387-8500, FAX: 949-387-0800

STAMP
LICENSED ARCHITECT
No. 15573
REN. 7-31-25
STATE OF CALIFORNIA

ISSUE

REV.	DESCRIPTION	DATE
	30% CD SET	12/15/23
	60% CD SET	01/12/24
	90% CD SET	02/26/24
1	CLIENT REVISIONS	04/26/24
2	BID SET	09/10/24
3	BULLETIN #1	10/25/24
4	BULLETIN #1 R1	2/14/25
	COMPOSITE SET	9/24/25

PROJECT IDENTIFICATION
THIS DRAWING WAS CREATED IN REVIT V. 2020 UNLESS OTHERWISE NOTED.
THE ORIGINAL SIZE OF THIS SHEET IS 30" X 42"

THESE DRAWINGS AND SPECIFICATIONS ARE THE PROPERTY AND COPYRIGHT OF IDS GROUP AND SHALL NOT BE USED ON ANY OTHER PROJECT OR LOCATIONS EXCEPT AS DESCRIBED ON THE DRAWINGS, WITHOUT THE WRITTEN AGREEMENT WITH IDS GROUP.

IDS PROJECT NO.	22X099.03
IDS DRAWN BY	MJ
IDS CHECKED BY	MM
IDS APPROVED BY	JS

SHEET TITLE
CAL GREEN NON-RESIDENTIAL CHECKLIST 2 OF 3

SHEET NUMBER
G-006

USER: Author
PLOT DATE: 10/29/2024 4:32:31 PM
IDS GROUP - FILE LOCATION: C:\Users\matisa.javaherian\Documents\22X099.01 LANC - ED DORADO PARK (E) COMMUNITY CENTER RENOVATION_ANCR_DY19202_matisa.javaherian\V2023.1.rvt

2022 CALIFORNIA GREEN BUILDING STANDARDS CODE
NONRESIDENTIAL MANDATORY MEASURES, SHEET 3 (January 2023)

Y = YES
N/A = NOT APPLICABLE
RESPON. PARTY = RESPONSIBLE PARTY (ie: ARCHITECT, ENGINEER, OWNER, CONTRACTOR, INSPECTOR ETC.)

5.504.4 FINISH MATERIAL POLLUTANT CONTROL. Finish materials shall comply with Sections 5.504.4.1 through 5.504.4.6.

5.504.4.1 Adhesives, sealants and caulks. Adhesives, sealants, and caulks used on the project shall meet the requirements of the following standards:
1. Adhesives, adhesive bonding primers, adhesive primers, sealants, sealant primers and caulks shall comply with local or regional air pollution control or air quality management district rules where applicable, or SCAQMD Rule 1168 VOC limits, as shown in Tables 5.504.4.1 and 5.504.4.2. Such products also shall comply with the Rule 1168 prohibition on the use of certain toxic compounds (chloroform, ethylene dichloride, methylene chloride, perchloroethylene and trichloroethylene), except for aerosol products as specified in subsection 2, below.

2. Aerosol adhesives, and smaller unit sizes of adhesives, and sealant or caulking compounds (in units of product, less packaging, which do not weigh more than one pound and do not consist of more than 16 fluid ounces) shall comply with statewide VOC standards and other requirements, including prohibitions on use of certain toxic compounds, of *California Code of Regulations*, Title 17, commencing with Section 94507.

TABLE 5.504.4.1 - ADHESIVE VOC LIMIT[1,2]

Less Water and Less Exempt Compounds in Grams per Liter

ARCHITECTURAL APPLICATIONS	CURRENT VOC LIMIT
INDOOR CARPET ADHESIVES	50
CARPET PAD ADHESIVES	50
OUTDOOR CARPET ADHESIVES	150
WOOD FLOORING ADHESIVES	100
RUBBER FLOOR ADHESIVES	60
SUBFLOOR ADHESIVES	50
CERAMIC TILE ADHESIVES	65
VCT & ASPHALT TILE ADHESIVES	50
DRYWALL & PANEL ADHESIVES	50
COVE BASE ADHESIVES	50
MULTIPURPOSE CONSTRUCTION ADHESIVES	70
STRUCTURAL GLAZING ADHESIVES	100
SINGLE-PLY ROOF MEMBRANE ADHESIVES	250
OTHER ADHESIVES NOT SPECIFICALLY LISTED	50
SPECIALTY APPLICATIONS	
PVC WELDING	510
CPVC WELDING	490
ABS WELDING	325
PLASTIC CEMENT WELDING	250
ADHESIVE PRIMER FOR PLASTIC	550
CONTACT ADHESIVE	80
SPECIAL PURPOSE CONTACT ADHESIVE	250
STRUCTURAL WOOD MEMBER ADHESIVE	140
TOP & TRIM ADHESIVE	250
SUBSTRATE SPECIFIC APPLICATIONS	
METAL TO METAL	30
PLASTIC FOAMS	50
POROUS MATERIAL (EXCEPT WOOD)	50
WOOD	30
FIBERGLASS	80

1. IF AN ADHESIVE IS USED TO BOND DISSIMILAR SUBSTRATES TOGETHER, THE ADHESIVE WITH THE HIGHEST VOC CONTENT SHALL BE ALLOWED.

2. FOR ADDITIONAL INFORMATION REGARDING METHODS TO MEASURE THE VOC CONTENT SPECIFIED IN THIS TABLE, SEE SOUTH COAST AIR QUALITY MANAGEMENT DISTRICT RULE 1168, www.arb.ca.gov/DRDB/SC/CURHTML/R1168.PDF

TABLE 5.504.4.2 - SEALANT VOC LIMIT

Less Water and Less Exempt Compounds in Grams per Liter

SEALANTS	CURRENT VOC LIMIT
ARCHITECTURAL	250
MARINE DECK	760
NONMEMBRANE ROOF	300
ROADWAY	250
SINGLE-PLY ROOF MEMBRANE	450
OTHER	420
SEALANT PRIMERS	
ARCHITECTURAL	
NONPOROUS	250
POROUS	775
MODIFIED BITUMINOUS	500
MARINE DECK	760
OTHER	750

NOTE: FOR ADDITIONAL INFORMATION REGARDING METHODS TO MEASURE THE VOC CONTENT SPECIFIED IN THESE TABLES, SEE SOUTH COAST AIR QUALITY MANAGEMENT DISTRICT RULE 1168.

5.504.4.3 Paints and coatings. Architectural paints and coatings shall comply with VOC limits in Table 1 of the ARB Architectural Coatings Suggested Control Measure, as shown in Table 5.504.4.3, unless more stringent local limits apply. The VOC content limit for coatings that do not meet the definitions for the specialty coatings categories listed in Table 5.504.4.3 shall be determined by classifying the coating as a Flat, Nonflat or Nonflat-High Gloss coating, based on its gloss, as defined in Subsections 4.21, 4.36 and 4.37 of the 2007 California Air Resources Board Suggested Control Measure, and the corresponding Flat, Nonflat or Nonflat-High Gloss VOC limit in Table 5.504.4.3 shall apply.

5.504.4.3.1 Aerosol Paints and coatings. Aerosol paints and coatings shall meet the PWMIR Limits for ROC in Section 94522(a)(3) and other requirements, including prohibitions on use of certain toxic compounds and ozone depleting substances, in Sections 94522(c)(2) and (d)(2) of *California Code of Regulations*, Title 17, commencing with Section 94520; and in areas under the jurisdiction of the Bay Area Air Quality Management District additionally comply with the percent VOC by weight of product limits of Regulation 8 Rule 49.

TABLE 5.504.4.3 - CONT.

GRAMS OF VOC PER LITER OF COATING, LESS WATER & LESS EXEMPT COMPOUNDS

COATING CATEGORY	CURRENT VOC LIMIT
SPECIALTY COATINGS	
ALUMINUM ROOF COATINGS	400
BASEMENT SPECIALTY COATINGS	400
BITUMINOUS ROOF COATINGS	50
BITUMINOUS ROOF PRIMERS	350
BOND BREAKERS	350
CONCRETE CURING COMPOUNDS	350
CONCRETE/MASONRY SEALERS	100
DRIVEWAY SEALERS	50
DRY FOG COATINGS	150
FAUX FINISHING COATINGS	350
FIRE RESISTIVE COATINGS	350
FLOOR COATINGS	100
FORM-RELEASE COMPOUNDS	250
GRAPHIC ARTS COATINGS (SIGN PAINTS)	500
HIGH-TEMPERATURE COATINGS	420
INDUSTRIAL MAINTENANCE COATINGS	250
LOW SOLIDS COATINGS[1]	120
MAGNESITE CEMENT COATINGS	450
MASTIC TEXTURE COATINGS	100
METALLIC PIGMENTED COATINGS	500
MULTICOLOR COATINGS	250
PRETREATMENT WASH PRIMERS	420
PRIMERS, SEALERS, & UNDERCOATERS	100
REACTIVE PENETRATING SEALERS	350
RECYCLED COATINGS	250
ROOF COATINGS	50
RUST PREVENTATIVE COATINGS	250
SHELLACS:	
CLEAR	730
OPAQUE	550
SPECIALTY PRIMERS, SEALERS & UNDERCOATERS	100
STAINS	250
STONE CONSOLIDANTS	450
SWIMMING POOL COATINGS	340
TRAFFIC MARKING COATINGS	100
TUB & TILE REFINISH COATINGS	420
WATERPROOFING MEMBRANES	250
WOOD COATINGS	275
WOOD PRESERVATIVES	350
ZINC-RICH PRIMERS	340

1. GRAMS OF VOC PER LITER OF COATING, INCLUDING WATER & EXEMPT COMPOUNDS

2. THE SPECIFIED LIMITS REMAIN IN EFFECT UNLESS REVISED LIMITS ARE LISTED IN SUBSEQUENT COLUMNS IN THE TABLE.

3. VALUES IN THIS TABLE ARE DERIVED FROM THOSE SPECIFIED BY THE CALIFORNIA AIR RESOURCES BOARD, ARCHITECTURAL COATINGSUGGESTED CONTROL MEASURE, FEB. 1, 2008. MORE INFORMATION IS AVAILABLE FROM THE AIR RESOURCES BOARD.

5.504.4.3.2 Verification. Verification of compliance with this section shall be provided at the request of the enforcing agency. Documentation may include, but is not limited to, the following:
1. Manufacturer's product specification
2. Field verification of on-site product containers

5.504.4.4 Carpet Systems.
All carpet installed in the building interior shall meet the requirements of the California Department of Public Health, "Standard Method for the Testing and Evaluation of Volatile Organic Chemical Emissions from Indoor Sources Using Environmental Chambers." Version 1.2, January 2017 (Emission testing method for California Specifications 01350).

See California Department of Public Health's website for certification programs and testing labs.
https://www.cdph.ca.gov/Programs/CCDPHP/DEODC/EHLB/IAQ/Pages/VOC.aspx#material

5.504.4.4.1 Carpet cushion. All carpet cushion installed in the building interior shall meet the requirements of the California Department of Public Health,"Standard Method for the Testing and Evaluation of Volatile Organic Chemical Emissions from Indoor Sources Using Environmental Chambers,"Version 1.2, January 2017 (Emission testing method for California Specifications 01350).

See California Department of Public Health's website for certification programs and testing labs.
https://www.cdph.ca.gov/Programs/CCDPHP/DEODC/EHLB/IAQ/Pages/VOC.aspx#material

5.504.4.4.2 Carpet adhesive. All carpet adhesive shall meet the requirements of Table 5.504.4.1.

5.504.4.5 Composite wood products. Hardwood plywood, particleboard and medium density fiberboard composite wood products used on the interior or exterior of the buildings shall meet the requirements for formaldehyde as specified in ARB's Air Toxics Control Measure (ATCM) for Composite Wood (17 CCR 93120 et seq.). Those materials not exempted under the ATCM must meet the specified emission limits, as shown in Table 5.504.4.5.

5.504.4.5.3 Documentation. Verification of compliance with this section shall be provided as requested by the enforcing agency. Documentation shall include at least one of the following:
1. Product certifications and specifications.
2. Chain of custody certifications.
3. Product labeled and invoiced as meeting the Composite Wood Products regulation (see CCR, Title 17, Section 93120, et seq.).
4. Exterior grade products marked as meeting the PS-1 or PS-2 standards of the Engineered Wood Association, the Australian AS/NZS 2269 or European 636 3S standards.
5. Other methods acceptable to the enforcing agency.

TABLE 5.504.4.5 - FORMALDEHYDE LIMITS[1]

MAXIMUM FORMALDEHYDE EMISSIONS IN PARTS PER MILLION

PRODUCT	CURRENT LIMIT
HARDWOOD PLYWOOD VENEER CORE	0.05
HARDWOOD PLYWOOD COMPOSITE CORE	0.05
PARTICLE BOARD	0.09
MEDIUM DENSITY FIBERBOARD	0.11
THIN MEDIUM DENSITY FIBERBOARD[2]	0.13

1. VALUES IN THIS TABLE ARE DERIVED FROM THOSE SPECIFIED BY THE CALIFORNIA AIR RESOURCES BOARD, AIR TOXICS CONTROL MEASURE FOR COMPOSITE WOOD AS TESTED IN ACCORDANCE WITH ASTM E 1333. FOR ADDITIONAL INFORMATION, SEE CALIFORNIA CODE OF REGULATIONS, TITLE 17, SECTIONS 93120 THROUGH 93120.12.

2. THIN MEDIUM DENSITY FIBERBOARD HAS A MAXIMUM THICKNESS OF 5/16 INCHES (8 MM).

5.504.4.6 Resilient flooring systems. Where resilient flooring is installed, at least 80 percent of floor area receiving resilient flooring shall meet the requirements of the California Department of Public Health,"Standard Method for the Testing and Evaluation of Volatile Organic Chemical Emissions from Indoor Sources Using Environmental Chambers," Version 1.2, January 2017 (Emission testing method for California Specifications 01350)

See California Department of Public Health's website for certification programs and testing labs.
https://www.cdph.ca.gov/Programs/CCDPHP/DEODC/EHLB/IAQ/Pages/VOC.aspx#material

5.504.4.6.1 Verification of compliance. Documentation shall be provided verifying that resilient flooring materials meet the pollutant emission limits.

5.504.4.7 Thermal insulation
Comply with the requirements of the California Department of Public Health, "Standard Method of the Testing and Evaluation of Volatile Organic Chemical Emissions from Indoor Sources Using Environmental Chambers, "Version 1.2, January 1.2, January 2017 (Emission testing method for California Specification 01350).
See California Department of Public Health's website for certification programs and testing labs.
https://www.cdph.ca.gov/Programs/CCDPHP/DEODC/EHLB/IAQ/Pages/VOC.aspx#material

5.504.4.7.1 Verification of compliance.
Documentation shall be provided verifying that thermal insulation materials meet the pollutant emission limits.

5.504.4.8 Acoustical ceiling and wall panels.
Comply with the requirements of the California Department of Public Health, "Standard Method for the Testing and Evaluation of Volatile Organic Chemical Emissions from Indoor Sources Using Environmental Chambers, " Version 1.2, January 2017 (Emission testing method for California Specification 01350).
See California Department of Public Health's website for certification programs and testing labs.

5.504.4.8.1 Verification of compliance. Documentation shall be provided verifying that acoustical finish materials meet the pollutant emission limits.

5.504.5.3 Filters. In mechanically ventilated buildings, provide regularly occupied areas of the building with air filtration media for outside and return air that provides at least a Minimum Efficiency Reporting Value (MERV) of 13. MERV 13 filters shall be installed prior to occupancy, and recommendations for maintenance with filters of the same value shall be included in the operation and maintenance manual.

Exceptions: Existing mechanical equipment.

5.504.5.3.1 Labeling. Installed filters shall be clearly labeled by the manufacturer indicating the MERV rating.

5.504.7 ENVIRONMENTAL TOBACCO SMOKE (ETS) CONTROL. Where outdoor areas are provided for smoking, prohibit smoking within 25 feet of building entries, outdoor air intakes and operable windows and within the building as already prohibited by other laws or regulations; or as enforced by ordinances, regulations or policies of any city, county, city and county, California Community College, campus of the California State University, or campus of the University of California, whichever are more stringent. When ordinances, regulations or policies are not in place, post signage to inform building occupants of the prohibitions.

SECTION 5.505 INDOOR MOISTURE CONTROL

5.505.1 INDOOR MOISTURE CONTROL. Buildings shall meet or exceed the provisions of California Building Code, CCR, Title 24, Part 2, Sections 1202 (Ventilation) and Chapter 14 (Exterior Walls). For additional measures, see Section 5.407.2 of this code.

SECTION 5.506 INDOOR AIR QUALITY

5.506.1 OUTSIDE AIR DELIVERY. For mechanically or naturally ventilated spaces in buildings, meet the minimum requirements of Section 120.1 (Requirements For Ventilation) of the *California Energy Code*, or the applicable local code, whichever is more stringent, and Division 1, Chapter 4 of CCR, Title 8.

5.506.2 CARBON DIOXIDE (CO_2) MONITORING. For buildings or additions equipped with demand control ventilation, CO_2 sensors and ventilation controls shall be specified and installed in accordance with the requirements of the California Energy Code, Section 120(c)(4).

5.506.3 Carbon dioxide (CO2) monitoring in classrooms. (DSA-SS) Each public K-12 school classroom, as listed in Table 120.1-A of the *California Energy Code*, shall be equipped with a carbon dioxide monitor or sensor that meets the following requirements:
1. The monitor or sensor shall be permanently affixed in a tamper-proof manner in each classroom between 3 and 6 feet (914 mm and 1829 mm) above the floor and at least 5 feet (1524 mm) away from door and operable windows.
2. When the monitor or sensor is not integral to an Energy Management Control System (EMCS), the monitor or sensor shall display the carbon dioxide readings on the device. When the sensor is integral to an EMCS, the carbon dioxide readings shall be available to and regularly monitored by facility personnel.
3. A monitor shall provide notification though a visual indicator on the monitor when the carbon dioxide levels in the classroom have exceeded 1,100ppm. A sensor integral to an EMCS shall provide notification to facility personnel through a visual and/or audible indicator when the carbon dioxide levels in the classroom have exceeded 1,100ppm.
4. The monitor or sensor shall measure carbon dioxide levels at minimum 15- minute intervals and shall maintain a record of previous carbon dioxide measurements of not less than 30 days duration.
5. The monitor or sensor used to measure carbon dioxide levels shall have the capacity to measure carbon dioxide levels with a range of 400ppm to 2000ppm or greater.
6. The monitor or sensor shall be certified by the manufacturer to be accurate within 75ppm at 1,000ppm carbon dioxide concentration and shall be certified by the manufacturer to require calibration no more frequently than once every 5 years.

SECTION 5.507 ENVIRONMENTAL COMFORT

5.507.4 ACOUSTICAL CONTROL. Employ building assemblies and components with Sound Transmission Class (STC) values determined in accordance with ASTM E 90 and ASTM E 413, or Outdoor-Indoor Sound Transmission Class (OITC) determined in accordance with ASTM E 1332, using either the prescriptive or performance method in Section 5.507.4.1 or 5.507.4.2.

Exception: Buildings with few or no occupants or where occupants are not likely to be affected by exterior noise, as determined by the enforcement authority, such as factories, stadiums, storage, enclosed parking structures and utility buildings.

Exception: [DSA-SS] For public schools and community colleges, the requirements of this section and all subsections apply only to new construction.

5.507.4.1 Exterior noise transmission, prescriptive method. Wall and roof-ceiling assemblies exposed to the noise source making up the building or addition envelope or altered envelope shall meet a composite STC rating of at least 50 or a composite OITC rating of no less than 40, with exterior windows of a minimum STC of 40 or OITC of 30 in the following locations:

1. Within the 65 CNEL noise contour of an airport.

Exceptions:

1. L_{dn} or CNEL for military airports shall be determined by the facility Air Installation Compatible Land Use Zone (AICUZ) plan.
2. L_{dn} or CNEL for other airports and heliports for which a land use plan has not been developed shall be determined by the local general plan noise element.

2. Within the 65 CNEL or L_{dn} noise contour of a freeway or expressway, railroad, industrial source or fixed-guideway source as determined by the Noise Element of the General Plan.

5.507.4.1.1. Noise exposure where noise contours are not readily available. Buildings exposed to a noise level of 65 dB L_{eq} - 1-hr during any hour of operation shall have building, addition or alteration exterior wall and roof-ceiling assemblies exposed to the noise source meeting a composite STC rating of at least 45 (or OITC 35), with exterior windows of a minimum STC of 40 (or OITC 30).

5.507.4.2 Performance Method. For buildings located as defined in Section 5.507.4.1 or 5.507.4.1.1, wall and roof-ceiling assemblies exposed to the noise source making up the building or addition envelope or altered envelope shall be constructed to provide an interior noise environment attributable to exterior sources that does not exceed an hourly equivalent noise level (Leq-1Hr) of 50 dBA in occupied areas during any hour of operation.

5.507.4.2.1 Site Features. Exterior features such as sound walls or earth berms may be utilized as appropriate to the building, addition or alteration project to mitigate sound migration to the interior.

5.507.4.2.2 Documentation of Compliance. An acoustical analysis documenting complying interior sound levels shall be prepared by personnel approved by the architect or engineer of record.

5.507.4.3 Interior sound transmission. Wall and floor-ceiling assemblies separating tenant spaces and tenant spaces and public places shall have an STC of at least 40.

Note: Examples of assemblies and their various STC ratings may be found at the California Office of Noise Control: www.toolbase.org/PDF/CaseStudies/stc_icc_ratings.pdf.

SECTION 5.508 OUTDOOR AIR QUALITY

5.508.1 Ozone depletion and greenhouse gas reductions. Installations of HVAC, refrigeration and fire suppression equipment shall comply with Sections 5.508.1.1 and 5.508.1.2.

5.508.1.1 Chlorofluorocarbons (CFCs). Install HVAC, refrigeration and fire suppression equipment that do not contain CFCs.

5.508.1.2 Halons. Install HVAC, refrigeration and fire suppression equipment that do not contain Halons.

5.508.2 Supermarket refrigerant leak reduction. New commercial refrigeration systems shall comply with the provisions of this section when installed in retail food stores 8,000 square feet or more conditioned area, and that utilize either refrigerated display cases, or walk-in coolers or freezers connected to remote compressor units or condensing units. The leak reduction measures apply to refrigeration systems containing high-global-warming potential (high-GWP) refrigerants with a GWP of 150 or greater. New refrigeration systems include both new facilities and the replacement of existing refrigeration systems in existing facilities.

Exception: Refrigeration systems containing low-global warming potential (low-GWP) refrigerant with a GWP value less than 150 are not subject to this section. Low-GWP refrigerants are nonozone-depleting refrigerants that include ammonia, carbon dioxide (CO_2), and potentially other refrigerants.

5.508.2.1 Refrigerant piping. Piping compliant with the California Mechanical Code shall be installed to be accessible for leak protection and repairs. Piping runs using threaded pipe, copper tubing with an outside diameter (OD) less than 1/4 inch, flared tubing connections and short radius elbows shall not be used in refrigerant systems except as noted below.

5.508.2.1.1 Threaded pipe. Threaded connections are permitted at the compressor rack.

5.508.2.1.2 Copper pipe. Copper tubing with an OD less than 1/4 inch may be used in systems with a refrigerant charge of 5 pounds or less.

5.508.2.1.2.1 Anchorage. One-fouth-inch OD tubing shall be securely clamped to a rigid base to keep vibration levels below 8 mils.

5.508.2.1.3 Flared tubing connections. Double-flared tubing connections may be used for pressure controls, valve pilot lines and oil.

Exception: Single-flared tubing connections may be used with a multiring seal coated with industrial sealant suitable for use with refrigerants and tightened in accordance with manufacturer's recommendations.

5.508.2.1.4 Elbows. Short radius elbows are only permitted where space limitations prohibit use of long radius elbows.

5.508.2.2 Valves. Valves Valves and fittings shall comply with the *California Mechanical Code* and as follows.

5.508.2.2.1 Pressure relief valves. For vessels containing high-GWP refrigerant, a rupture disc shall be installed between the outlet of the vessel and the inlet of the pressure relief valve.

5.508.2.2.1.1 Pressure detection. A pressure gauge, pressure transducer or other device shall be installed in the space between the rupture disc and the relief valve inlet to indicate a disc rupture or discharge of the relief valve.

5.508.2.2.2 Access valves. Only Schrader access valves with a brass or steel body are permitted for use.

5.508.2.2.2.1 Valve caps. For systems with a refrigerant charge of 5 pounds or more, valve caps shall be brass or steel and not plastic.

5.508.2.2.2.2 Seal caps. If designed for it, the cap shall have a neoprene O-ring in place.

5.508.2.2.2.2.1 Chain tethers. Chain tethers to fit ovr the stem are required for valves designed to have seal caps.

Exception: Valves with seal caps that are not removed from the valve during stem operation.

5.508.2.3 Refrigerated service cases. Refrigerated service cases holding food products containing vinegar and salt shall have evaporator coils of corrosion-resistant material, such as stainless steel; or be coated to prevent corrosion from these substances.

5.508.2.3.1 Coil coating. Consideration shall be given to the heat transfer efficiency of coil coating to maximize energy efficiency.

5.508.2.4 Refrigerant receivers. Refrigerant receivers with capacities greater than 200 pounds shall be fitted with a device tha indicates the level of refrigerant in the receiver.

5.508.2.5 Pressure testing. The system shall be pressure tested during installation prior to evacuation and charging.

5.508.2.5.1 Minimum pressure. The system shall be charged with regulated dry nitrogen and appropriate tracer gas to bring system pressure up to 300 psig minimum.

5.508.2.5.2 Leaks. Check the system for leaks, repair any leaks, and retest for pressure using the same gauge.

5.508.2.5.3 Allowable pressure change. The system shall stand, unaltered, for 24 hours with no more than a +/- one pound pressure change from 300 psig, measured with the same gauge.

5.508.2.6 Evacuation. The system shall be evacuated after pressure testing and prior to charging.

5.508.2.6.1 First vacuum. Pull a system vacuum down to at least 1000 microns (+/- 50 microns), and hold for 30 minutes.

5.508.2.6.2 Second vacuum. Pull a second system vacuum to a minimum of 500 microns and hold for 30 minutes.

5.508.2.6.3 Third vacuum. Pull a third vacuum down to a minimum of 300 microns, and hold for 24 hours with a maximum drift of 100 microns over a 24-hour period.

CHAPTER 7
INSTALLER & SPECIAL INSPECTOR QUALIFICATIONS

702 QUALIFICATIONS

702.1 INSTALLER TRAINING. HVAC system installers shall be trained and certified in the proper installation of HVAC systems including ducts and equipment by a nationally or regionally recognized training or certification program. Uncertified persons may perform HVAC installations when under the direct supervision and responsibility of a person trained and certified to install HVAC systems or contractor licensed to install HVAC systems. Examples of acceptable HVAC training and certification programs include but are not limited to the following:

1. State certified apprenticeship programs.
2. Public utility training programs.
3. Training programs sponsored by trade, labor or statewide energy consulting or verification organizations.
4. Programs sponsored by manufacturing organizations.
5. Other programs acceptable to the enforcing agency.

702.2 SPECIAL INSPECTION [HCD]. When required by the enforcing agency, the owner or the responsible entity acting as the owner's agent shall employ one or more special inspectors to provide inspection or other duties necessary to substantiate compliance with this code. Special inspectors shall demonstrate competence to the satisfaction of the enforcing agency for the particular type of inspection or task to be performed. In addition to other certifications or qualifications acceptable to the enforcing agency, the following certifications or education may be considered by the enforcing agency when evaluating the qualifications of a special inspector:

1. Certification by a national or regional green building program or standard publisher.
2. Certification by a statewide energy consulting or verification organization, such as HERS raters, building performance contractors, and home energy auditors.
3. Successful completion of a third party apprentice training program in the appropriate trade.
4. Other programs acceptable to the enforcing agency.

Notes:

1. Special inspectors shall be independent entities with no financial interest in the materials or the project they are inspecting for compliance with this code.
2. HERS raters are special inspectors certified by the California Energy Commission (CEC) to rate homes in California according to the Home Energy Rating System (HERS).

[BSC-CG] When required by the enforcing agency, the owner or the responsible entity acting as the owner's agent shall employ one or more special inspectors to provide inspection or other duties necessary to substantiate compliance with this code. Special inspectors shall demonstrate competence to the satisfaction of the enforcing agency for the particular type of inspection or task to be performed. In addition, the special inspector shall have a certification from a recognized state, national or international association, as determined by the local agency. The area of certification shall be closely related to the primary job function, as determined by the local agency.

Note: Special inspectors shall be independent entities with no financial interest in the materials or the project they are inspecting for compliance with this code.

703 VERIFICATIONS

703.1 DOCUMENTATION. Documentation used to show compliance with this code shall include but is not limited to, construction documents, plans, specifications, builder or installer certification, inspection reports, or other methods acceptable to the enforcing agency which demonstrate substantial conformance. When specific documentation or special inspection is necessary to verify compliance, that method of compliance will be specified in the appropriate section or identified applicable checklist.

REFERENCE:
https://aiacalifornia.org/calgreen-checklists/

DISCLAIMER: *THIS DOCUMENT IS PROVIDED AND INTENDED TO BE USED AS A MEANS TO INDICATE AREAS OF COMPLIANCE WITH THE CALIFORNIA GREEN BUILDING STANDARDS (CALGREEN) CODE. DUE TO THE VARIABLES BETWEEN BUILDING DEPARTMENT JURISDICTIONS, THIS CHECKLIST IS TO BE USED ON AN INDIVIDUAL PROJECT BASIS AND MAY BE MODIFIED BY THE END USER TO MEET THOSE INDIVIDUAL NEEDS. THE END USER ASSUMES ALL RESPONSIBILITY ASSOCIATED WITH THE USE OF THIS DOCUMENT, INCLUDING VERIFICATION WITH THE FULL CODE.*

IDS GROUP - FILE LOCATION: C:\Users\mattea.jayatherian\Documents\22X099.01 LANC - EI DORADO PARK (E) COMMUNITY CENTER RENOVATION_ARCH_CNT22X22_matteajayatherian4WDEF.rvt
PLOT DATE: 10/29/2024 4:32:32 PM
USER: Author

APPROVAL

CITY APPROVED BY:
DIRECTOR OF PUBLIC WORKS DATE
CITY REVIEWED BY:
SENIOR ENGINEER DATE
SUBMITTED BY:
DATE

CLIENT
LANCASTER
Creating a better tomorrow. Together.
CITY OF LANCASTER
44933 FERN AVENUE
LANCASTER, CA 93534

PROJECT NAME
SAMARITAN'S PURSE PARK FORMERLY KNOWN AS EL DORADO PARK RENOVATION
PWCP NO. 24-008
44501 5TH ST EAST
LANCASTER, CA 93535

ENGINEER/ARCHITECT
IDS
IDS GROUP
1 PETERS CANYON ROAD, SUITE 130
IRVINE, CA 92606
TEL: 949-387-8500, FAX: 949-387-0800

STAMP
REGISTERED ARCHITECT JOSEPH SIMPSON VILLAGE No. C-35573 REN. 7-31-25 STATE OF CALIFORNIA

ISSUE

REV.	DESCRIPTION	DATE
	30% CD SET	12/15/23
	60% CD SET	01/12/24
	90% CD SET	02/26/24
1	CLIENT REVISIONS	04/26/24
2	BID SET	09/10/24
3	BULLETIN #1	10/25/24
4	BULLETIN #1 R1	2/14/25
	COMPOSITE SET	9/24/25

PROJECT IDENTIFICATION
THIS DRAWING WAS CREATED IN REVIT V. 2020 UNLESS OTHERWISE NOTED.
THE ORIGINAL SIZE OF THIS SHEET IS 30" X 42"

THESE DRAWINGS AND SPECIFICATIONS ARE THE PROPERTY AND COPYRIGHT OF IDS GROUP AND SHALL NOT BE USED ON ANY OTHER PROJECT OR LOCATIONS EXCEPT AS DESCRIBED ON THE DRAWINGS, WITHOUT THE WRITTEN AGREEMENT WITH IDS GROUP.

IDS PROJECT NO.	22X099.03
IDS DRAWN BY	MJ
IDS CHECKED BY	MM
IDS APPROVED BY	JS

SHEET TITLE
CAL GREEN NON-RESIDENTIAL CHECKLIST 3 OF 3

SHEET NUMBER
G-007

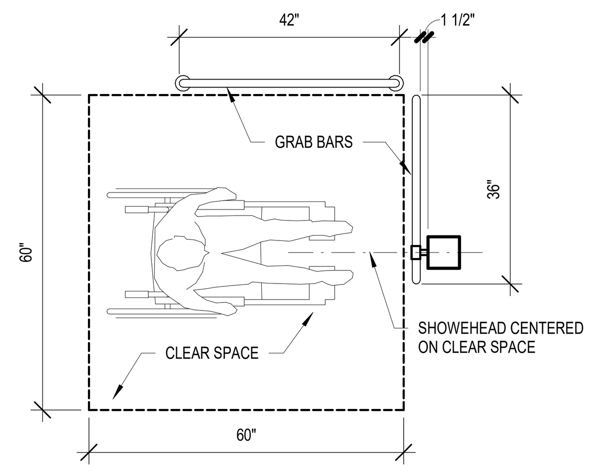

ACCESSIBLE OUTDOOR SHOWERS | 1/2" = 1'-0" | A4

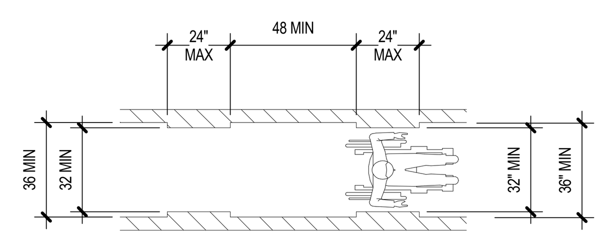

CBC 2022 FIGURE 11B-403.5.1
ABAAS FIGURE 403.5.1
CLEAR WIDTH FOR AN ACCESSIBLE ROUTE

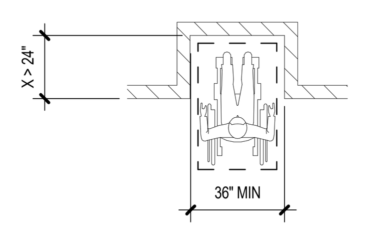

CBC 2022 FIGURE 11B-305.7.1
ABAAS FIGURE 305.7.1
MANUEVERING CLEARANCE IN AN ALCOVE, FORWARD APPROACH

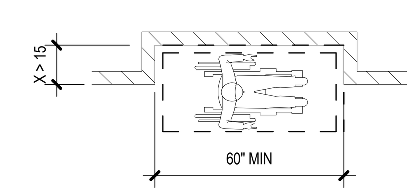

CBC 2022 FIGURE 11B-305.7.2
ABAAS FIGURE 305.7.2
MANUEVERING CLEARANCE IN AN ALCOVE, PARALLEL APPROACH

A B

CBC 2022 FIGURE 11B-305.5
ABAAS FIGURE 305.5
POSITION OF CLEAR FLOOR OR GROUND SPACE

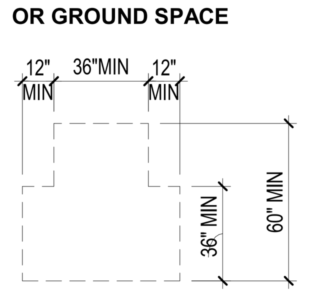

CBC 2022 FIGURE 11B-304.3.2
ABAAS FIGURE 304.3.2
T-SHAPED TURNING SPACE
T-SHAPED SPACE FOR 180 DEGREE TURNS

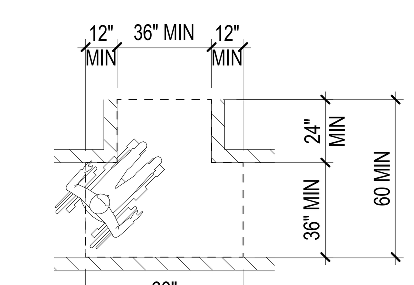

CBC 2022 FIGURE 11B-304.2
ABAAS FIGURE 304.3.2
T-SHAPED TURNING SPACE

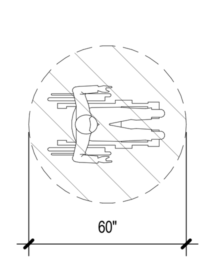

60" DIAMETER SPACE FOR 180 DEGREE TURNS

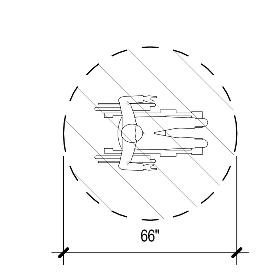

66" DIAMETER SPACE

ABAAS 304.3.1 CIRCULAR SPACE.
THE TURNING SPACE SHALL BE A SPACE OF
60 INCHES DIAMETER MINIMUM

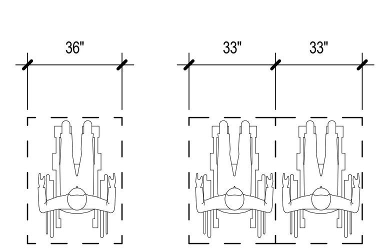

CBC 2022 FIGURE 11B-802.1.2
ABAAS FIGURE 802.1.2
WIDTH OF WHEELCHAIR SPACES

ACCESSIBLE ROUTES | 1/4" = 1'-0" | A1

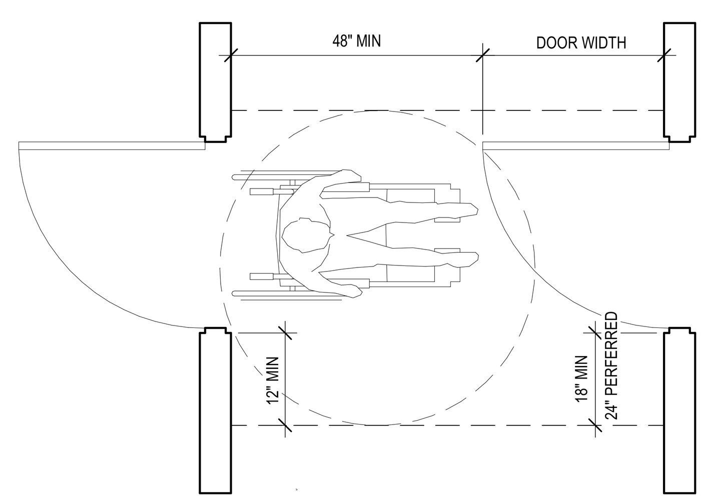

A

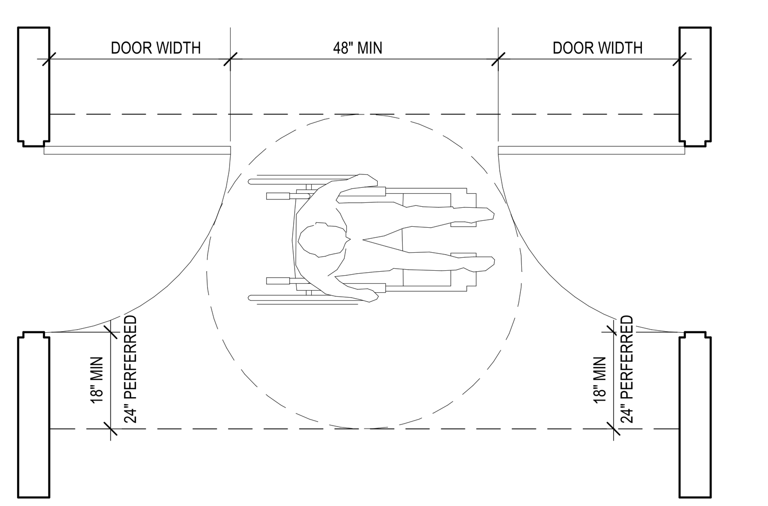

B

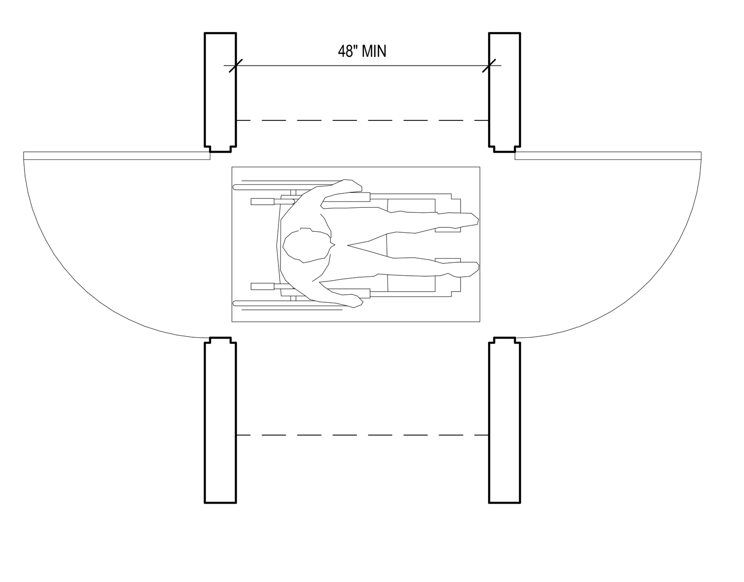

C

ACCESSIBLE DOORS IN A SERIES | 1/2" = 1'-0" | A2

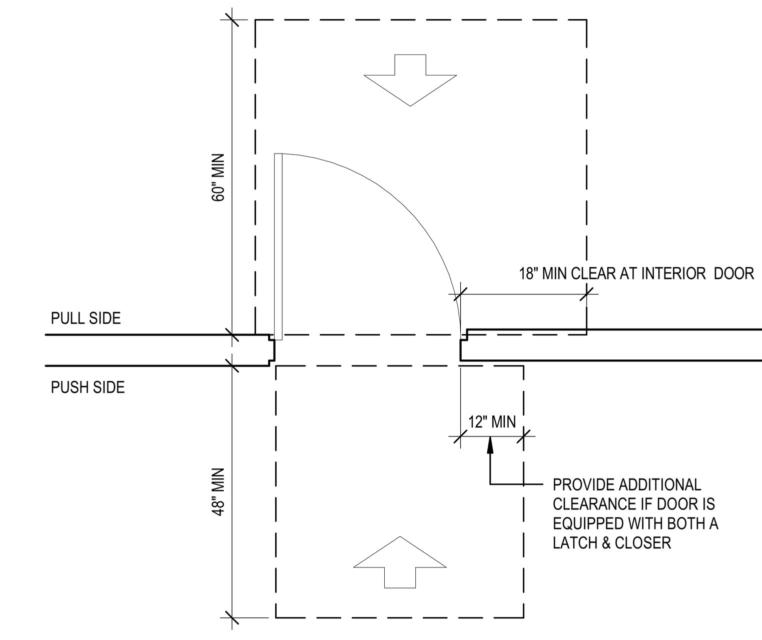

A. FRONT APPROACH

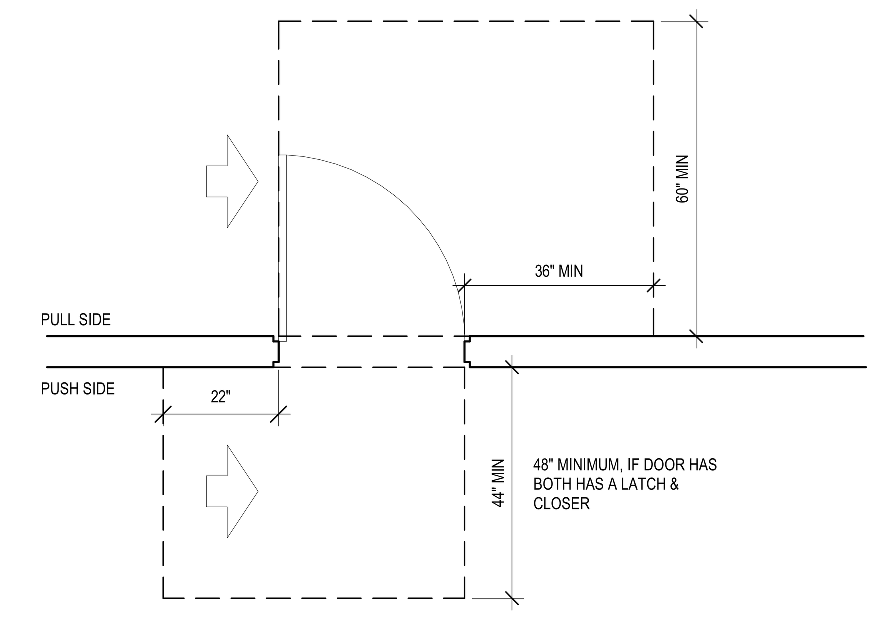

B. HINGE APPROACH

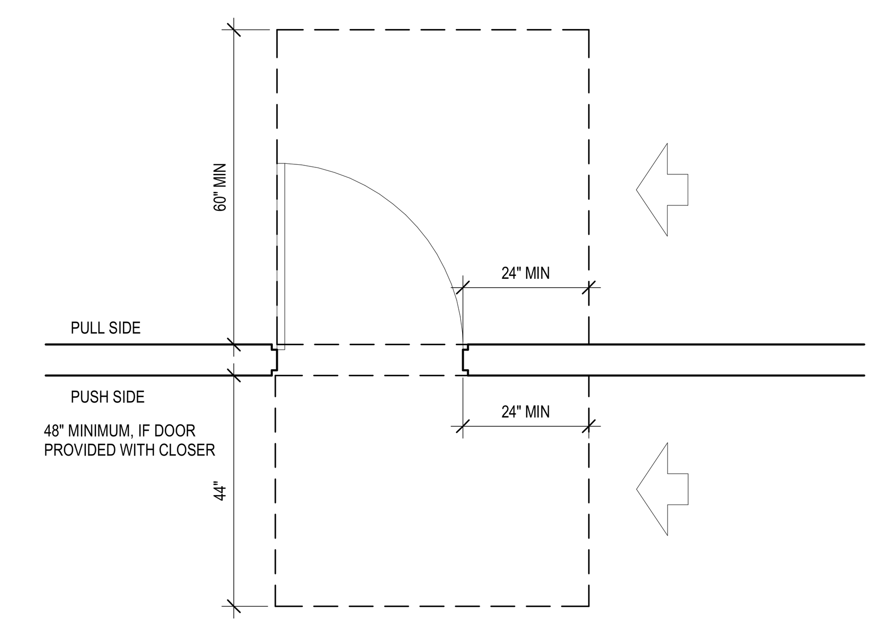

C. LATCH SIDE APPROACH

CBC 2022 FIGURE 11B-404.2.4.2
ABAAS FIGURE 404.2.4.2
MANEUVERING CLEARANCES AT DOORWAYS WITHOUT DOORS, SLIDING DOORS, GATES AND FOLDING DOORS

MANEURVERING CLEARANCES | 1/2" = 1'-0" | B3

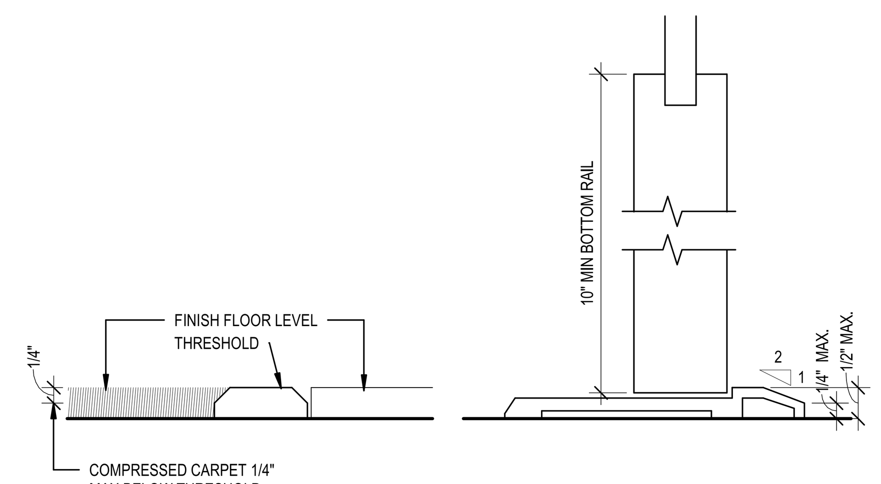

NOTE: NEW BUILDING INTERIOR AND EXTERIOR THRESHOLDS WILL BE REQUIRED TO BE NO HIGHER THAN 1/2" ABOVE THE ADJACENT FLOOR LEVELS. EACH EXPOSED EDGE OF THRESHOLDS IS REQUIRED TO BE BEVELED OR SLOPED AT AN ANGLE NOT TO EXCEED 45 DEGREES SO THAT NO VERTICAL CHANGE OF ELEVATION EXCEEDS 1/4"

ACCESSIBLE THRESHOLD | 6" = 1'-0" | A3

ACCESSIBILITY NOTES

DOORS AND ENTRANCES:

1. MANUALLY OPERATED EDGE OR SURFACE MOUNTED FLUSH BOLTS AND SURFACE BOLTS OR ANY OTHER TYPE OF DEVICE THAT MAY BE USED TO CLOSE OR RESTRAIN THE DOOR OTHER THAN BY OPERATION OF THE LOCKING DEVICE SHALL NOT BE USED. WHERE EXIT DOORS ARE USED IN PAIRS AND APPROVED AUTOMATIC FLUSH BOLTS ARE USED, THE DOOR LEAF HAVING THE AUTOMATIC FLUSH BOLTS SHALL HAVE NO DOOR KNOB OR SURFACE-MOUNTED HARDWARE. THE UNLATCHING OF ANY LEAF SHALL BE OPERABLE WITH ONE HAND AND SHALL NOT REQUIRE TIGHT GRASPING, PINCHING, OR TWISTING OF THE WRIST. THE FORCE REQUIRED TO ACTIVATE OPERABLE PARTS SHALL BE 5 LBS MAX.

2. BARS, GRILLES, GRATES OR SIMILAR DEVICES PLACED OVER EXIT DOORS SHALL BE OPENABLE FROM INSIDE WITHOUT THE USE OF A KEY, TOOL, OR ANY SPECIAL KNOWLEDGE OR EFFORT. SUCH BARS, GRILLES, GRATES, OR SIMILAR DEVICES SHALL BE EQUIPPED WITH AN APPROVED RELEASE DEVICE FOR USE BY THE FIRE DEPARTMENT ONLY ON THE EXTERIOR SIDE FOR PURPOSE BY THE FIRE DEPARTMENT EMERGENCY ACCESS, WHEN REQUIRED BY THE AUTHORITY HAVING JURISDICTION.

3. THE CLEAR WIDTH OF MEANS OF EGRESS COMPONENTS IN AREA SERVING BED OR LITTER PATIENTS SHALL BE SUCH TO ALLOW READY PASSAGE OF BEDS, GURNEYS AND SIMILAR EQUIPMENTS, BUT SHALL NOT BE LESS THAN 44 INCHES. ENTRANCE DOORS TO PATIENTS' BEDROOMS FROM CORRIDORS SHALL NOT SWING INTO THE REQUIRED WIDTH OF CORRIDORS.

4. FOR HINGED DOOR, THE OPENING WIDTH SHALL BE MEASURED WITH THE DOOR POSITIONED AT AN ANGLE OF 90 DEGREES FROM ITS CLOSED POSITION. NONETHELESS, EXIT DOOR SHALL SWING TO THE FULLY OPEN POSITION.

5. WHERE A PAIR OF DOORS IS UTILIZED, AT LEAST ONE OF THE DOORS SHALL PROVIDE A CLEAR, UNOBSTRUCTED OPENING WIDTH OF 36" MIN. CLEAR WITH THE LEAF POSITIONED AT AN ANGLE OF 90 DEGREES FROM ITS CLOSED POSITION.

6. THE WIDTH OF THE LEVEL AREA ON THE PULL SIDE OF THE DOOR SHALL EXTEND 24" PAST THE STRIKE EDGE OF THE DOOR FOR EXTERIOR DOORS AND 18" PAST THE STRIKE EDGE FOR INTERIOR DOORS.

7. PROVIDE CLEAR SPACE OF 12" PAST STRIKE EDGE OF THE DOOR ON THE PUSH SIDE OF THE DOOR. IF THE DOOR IS EQUIPPED WITH BOTH A LATCH AND A CLOSER ON THE PUSH SIDE OF THE DOOR.

8. LATCHING AND LOCKING DOORS THAT ARE HAND ACTIVATED AND WHICH ARE IN A PATH OF TRAVEL, SHALL BE OPERABLE WITH A SINGLE EFFORT BY LEVER TYPE HARDWARE, PANIC BARS, PUSH-PULL ACTIVATING BARS, OR OTHER HARDWARE DESIGNED TO PROVIDE PASSAGE WITHOUT REQUIRING MORE THAN ONE HAND AND THE ABILITY TO GRASP, PINCH, OR TWIST THE OPENING HARDWARE. THE FORCE REQUIRED TO ACTIVATE OPERABLE PARTS SHALL BE 5 LBS MAX. LOCKED EXIT DOORS SHALL OPERATE AS ABOVE IN EGRESS DIRECTION. **SECTION 11B-404**

9. THE FLOOR OR LANDING SHALL BE NOT MORE THAN 1/2 INCH LOWER THAN THE THRESHOLD OF THE DOORWAY. CHANGE IN LEVEL BETWEEN 1/4 INCH AND 1/2 INCH SHALL BE BEVELED WITH A SLOPE NO GREATER THAN 1:2. **SECTION 11B-303**

10. THE BOTTOM 10 INCHES OF ALL DOORS EXCEPT AUTOMATIC AND SLIDING SHALL HAVE A SMOOTH UNINTERRUPTED SURFACE TO ALLOW THE DOOR TO BE OPENED BY A WHEELCHAIR FOOTREST WITHOUT CREATING A TRAP OR HAZARDOUS CONDITION. A 10INCH HIGH SMOOTH PANEL SHALL BE INSTALLED ON PUSH SIDE OF THE DOOR, WHICH WILL ALLOW THE DOOR TO BE OPENED BY A WHEELCHAIR FOOTREST WITHOUT CREATING A TRAP OR HAZARDOUS CONDITION. **SECTION 11B-404.2.10**

11. MAXIMUM EFFORT TO OPERATE DOORS SHALL NOT EXCEED 5 LBS FOR EXTERIOR DOORS AND 5 LBS FOR INTERIOR DOORS, SUCH PULL OR PUSH EFFORT BEING APPLIED AT RIGHT ANGLES TO HINGED DOORS AND AT THE CENTER PLANE OF SLIDING OR FOLDING DOORS. COMPENSATING DEVICES OR AUTOMATIC DOOR OPERATORS MAY BE UTILIZED TO MEET THE ABOVE STANDARDS. WHEN FIRE DOORS ARE REQUIRED, THE MAXIMUM EFFORT TO OPERATE THE DOOR MAY BE INCREASED TO THE MAXIMUM ALLOWABLE BY THE APPROPRIATE ADMINISTRATIVE AUTHORITY, NOT TO EXCEED 15 POUNDS. DOOR CLOSERS SHALL BE ADJUSTED SO THAT FROM AN OPEN POSITION OF 90 DEGREES, THE TIME REQUIRED TO MOVE THE DOOR TO A POSITION OF 12 DEGREES FROM THE LATCH IS 5 SECONDS MIN. CBC **SECTION 11B-404.2.9 & 11B-404.2.8.1**

SPACE ALLOWANCE & REACH RANGES:

1. IF THE CLEAR FLOOR SPACE ONLY ALLOWS FORWARD APPROACH TO AN OBJECT, THE MAXIMUM HIGH FORWARD REACH SHALL BE 48", SEE **FIGURE 11B-308.2.1**. THE MINIMUM LOW FORWARD REACH IS 15". IF THE HIGH FORWARD REACH IS OVER AN OBSTRUCTION, REACH AND CLEARANCES SHALL BE AS SHOWN IN **FIGURE 11B-308.2.2**.

2. IF THE CLEAR FLOOR SPACE ALLOWS PARALLEL APPROACH BY A PERSON IN A WHEELCHAIR, THE MAXIMUM HIGH SIDE REACH ALLOWED SHALL BE 48" AND THE LOW SIDE REACH SHALL BE NO LESS THAN 15" ABOVE THE FLOOR AS SHOWN IN **FIGURE 11B-308.3.1**. IF THE SIDE REACH IS OVER AN OBSTRUCTION, THE REACH AND CLEARANCES SHALL BE AS SHOWN IN **FIGURE 11B-308.3.2**.

CONTROLS & OPERATING MECHANISMS:

1. CONTROLS AND OPERATING MECHANISMS REQUIRED TO BE ACCESSIBLE SHALL COMPLY WITH THE REQUIREMENTS OF **SECTION 11B-309**

2. CLEAR FLOOR SPACE COMPLYING WITH SECTION **11B-305** THAT ALLOWS A FORWARD OR PARALLEL APPROACH BY A PERSON USING A WHEELCHAIR SHALL BE PROVIDED AT CONTROLS, DISPENSERS, RECEPTACLES, AND OTHER OPERABLE EQUIPMENT.

3. THE HIGHEST AND LOWEST OPERABLE PART OF ALL CONTROLS, DISPENSERS, RECEPTACLES, AND OTHER OPERABLE EQUIPMENT SHALL BE PLACED WITHIN 48" OF THE FLOOR BUT NOT LOWER THAN 15" IF FORWARD APPROACHED AND WITHIN 48" BUT NOT LOWER THAN 15" IF SIDE APPROACHED. ELECTRICAL AND COMMUNICATION SYSTEM RECEPTACLES ON WALLS SHALL BE MOUNTED NO LESS THAN 15" ABOVE THE FLOOR TO THE BOTTOM OF THE OUTLET BOX.

4. CONTROLS AND OPERATING MECHANISMS SHALL BE OPERABLE WITH THE ONE HAND AND SHALL NOT REQUIRE TIGHT GRASPING, PINCHING, OR TWISTING OF THE WRIST. THE FORCE REQUIRED TO ACTIVATE CONTROLS SHALL BE NO GREATER THAN 5 POUNDS OF FORCE PER **SECTION 11B-309.4.**

5. THE BOTTOM OF THE OUTLET BOX OF RECEPTACLE OUTLETS SHALL BE NOT LESS THAN 15 INCHES ABOVE THE FLOOR OR WORKING PLATFORM.

6. THE TOP OF THE OUTLET BOX OF SWITCHES INTENDED TO BE USED BY THE OCCUPANT OF THE ROOM OR AREA TO CONTROL LIGHTING AND RECEPTACLE OUTLETS, APPLIANCES, OR COOLING, HEATING AND VENTILATING EQUIPMENT SHALL NOT BE MORE THAN 4- FEET ABOVE THE FLOOR OR WORKING PLATFORM.

7. PER **SECTION 907.4.2.2**, THE HEIGHT OF THE MANUAL FIRE ALARM BOXES SHALL BE 42"-48" TO THE HIGHEST POINT OF ACTIVATING HANDLE.

GROUND AND FLOOR SURFACES:

1. GENERAL. GROUND AND FLOOR SURFACES ALONG ACCESSIBLE ROUTES AND IN ACCESSIBLE ROOMS AND SPACES, INCLUDING FLOOR, WALKS, RAMPS, STAIRS, AND CURB RAMPS, SHALL BE STABLE, FIRM AND SLIP RESISTANT, AND SHALL COMPLY WITH **SECTION 11B-302**.

CHANGES IN LEVEL GREATER THAN 1/2" HIGH SHALL BE ACCOMPLISHED BY MEANS OF A RAMP NO STEEPER THAN 1 VERTICAL TO 2 HORIZONTAL.

2. CARPET. IF CARPET OR CARPET TILE IS USED ON A GROUND OR FLOOR SURFACE, THAN IT SHALL BE SECURELY ATTACHED; HAVE A FIRM CUSHION, PAD OR BACKING OR NO CUSHION OR PAD; AND HAVE A LEVEL LOOP, TEXTURED LOOP, LEVEL-CUT PILE, OR LEVEL-CUT / UNCUT PILE TEXTURE. THE MAXIMUM PILE HEIGHT SHALL BE ½ INCH. EXPOSED EDGES OF CARPET SHALL BE FASTENED TO FLOOR SURFACES AND HAVE TRIM ALONG THE ENTIRE LENGTH OF THE EXPOSED EDGE. CARPET EDGE TRIM SHALL COMPLY WITH **SECTION 11B-302.2.**

3. OPENINGS IN FLOOR OR GROUND SURACE SHALL NOT ALLOW PASSAGE OF A SPHERE MORE THAN 1/2" IN DIAMETER. ELONGATED OPENINGS SHALL BE PLACED SO THAT THE LONG DIMENSION IS PERPENDICULAR TO THE DOMINANT DIRECTION OF TRAVEL.

4. IF A WALK CROSSES OR ADJOINS A VEHICULAR WAY, AND THE WALKING SURFACES ARE NOT SEPARATED BY CURBS, RAILINGS, OR OTHER ELEMENTS BETWEEN THE PEDESTRIAN AREAS AND VEHICULAR AREAS , THE BOUNDARY BETWEEN THE AREAS SHALL BE DEFINED BY A COUNTINOUS DETECTABLE WARNING COMPLYING WITH **11B-705.**

5. THE RUNNING SLOPE SHALL NOT EXCEED 1:20 AND CROSS SLOPE SHALL NOT EXCEED 1:48. FOR WALKING SURFACES THAT ARE PART OF AN ACCESSIBLE ROUTE.

CORRIDORS & AISLES, PROTRUDING OBJECTS, AND VERTICAL CLEARANCES:

1. WALKS, HALLS, CORRIDORS, PASSAGEWAYS, AISLES, OR OTHER CIRCULATION SPACES SHALL HAVE 96" MINIMUM CLEAR HEAD ROOM. ANY OBSTRUCTION THAT PROJECTS FROM A CEILING SHALL BE A MINIMUM OF 80" ABOVE THE WALKING SURFACE AS MEASURED FROM THE BOTTOM OF THE OBSTRUCTION.

2. OBJECTS WITH LEADING EDGES MORE THAN 27 INCHES AND NOT MORE THAN 80 INCHES ABOVE THE FINISH FLOOR OR GROUND SHALL PROTRUDE 4 INCHES MAXIMUM HORIZONTALLY INTO THE CIRCULATION PATH.

3. FREESTANDING OBJECTS ON POSTS OR PYLONS SHALL OVERHANG CIRCULATION PATHS 12 INCHES MAXIMUM WHEN LOCATED 27 INCHES MINIMUM AND 80 INCHES MAXIMUM ABOVE THE FINISH FLOOR OR GROUND. WHERE A SIGN OR OTHER OBSTRUCTION IS MOUNTED BETWEEN POSTS OR PYLONS AND THE CLEAR DISTANCE BETWEEN THE POSTS OR PYLONS IS GREATER THAN 12 INCHES, THE LOWEST EDGE OF SUCH SIGN OR OBSTRUCTION SHALL BE 27 INCHES MAXIMUM OR 80 INCHES MINIMUM ABOVE THE FINISH FLOOR OR GROUND.

4. VERTICAL CLEARANCE SHALL BE 80 INCHES HIGH MINIMUM. GUARDRAILS OR OTHER BARRIERS SHALL BE PROVIDED WHERE THE VERTICAL CLEARANCE IS LESS THAN 80 INCHES
HIGH. THE LEADING EDGE OF SUCH GUARDRAIL OR BARRIER SHALL BE LOCATED 27 INCHES MAXIMUM ABOVE THE FINISH FLOOR OR GROUND.

5. DOOR CLOSERS AND DOOR STOPS SHALL BE PERMITTED TO BE 78 INCHES MINIMUM ABOVE THE FINISH FLOOR OR GROUND.

TOILET ROOM FIXTURES AND ACCESSORIES:

1. THE HEIGHT OF ACCESSIBLE WATER CLOSETS SHALL BE A MINIMUM OF 17 INCHES AND A MAXIMUM OF 19 INCHES MEASURED TO THE TOP OF THE TOILET SEAT.

2. PROVIDE 17" TO 18 INCHES FROM THE CENTERLINE OF THE WATER CLOSETS TO THE ADJACENT WALLS.

3. CLEARANCE AROUND THE WATER CLOSET SHALL BE 60" MINIMUM MEASURED PERPENDICULAR FROM THE SIDE WALL AND 56" MINIMUM MEASURED PERPINDICULAR FROM THE REAR WALL FOR WALL HUNG WATER CLOSETS AND 59" DEEP MINIMUM FOR FLOOR MOUNTED WATER CLOSETS..

4. A MINIMUM 60" WIDE AND 48" DEEP MANEUVERING SPACE SHALL BE PROVIDED IN FRONT OF THE WATER CLOSET.

5. FLUSH CONTROLS SHALL BE HAND OPERATED OR AUTOMATIC. HAND OPERATED CONTROLS SHALL BE LOCATED 44" MAXIMUM ABOVE THE FLOOR AND SHALL BE LOCATED ON THE OPEN SIDE OF THE WATER CLOSET COMPARTMENT. OPERABLE PARTS SHALL BE OPERABLE WITH ONE HAND AND SHALL NOT REQUIRE TIGHT GRASPING, PINCHING, OR TWISTING OF THE WRIST. THE FORCE REQUIRED TO ACTIVATE OPERABLE PARTS SHALL BE 5 LBS MAXIMUM.

6. URINALS SHALL BE STALL-TYPE OR WALL HUNG. WHERE ONE OR MORE WALL-HUNG URINALS ARE PROVIDED, AT LEAST ONE WITH AN ELONGATED RIM PROJECTING A MINIMUM OF 13 1/2" INCHES FROM THE WALL AND A MAXIMUM OF 17 INCHES ABOVE THE FLOOR SHALL BE PROVIDED. FLUSH CONTROLS SHALL BE HAND OPERATED OR AUTOMATIC. HAND OPERATED FLUSH CONTROLS SHALL COMPLY WITH SECTION 11B-309 EXCEPT THAT THE FLUSH CONTROL SHALL BE MOUNTED AT A MAXIMUM HEIGHT OF 44" (1118mm) ABOVE THE FINISH FLOOR. TOE CLEARANCE SHALL EXTEND 25" MAXIMUM UNDER AN ELEMENT.

7. LAVATORIES, WHEN LOCATED ADJACENT TO A SIDE WALL OR PARTITION, SHALL BE A MINIMUM OF 18 INCHES TO THE CENTERLINE OF THE FIXTURE. ALL LAVATORIES THAT ARE DESIGNATED TO BE ACCESSIBLE SHALL BE A MINIMUM 17 INCHES IN HORIZONTAL DEPTH AND MOUNTED WITH THE RIM OR COUNTER EDGE NO HIGHER THAN 34 INCHES ABOVE THE FINISHED FLOOR AND WITH VERTICAL CLEARANCE MEASURED FROM THE BOTTOM OF THE APRON OR THE OUTSIDE BOTTOM EDGE OF THE LAVATORY OF 29 INCHES REDUCING TO 27 INCHES AT A POINT LOCATED 8 INCHES BACK FROM THE FRONT EDGE. IN ADDITION, A MINIMUM 9 INCH HIGH TOE CLEARANCE MUST BE PROVIDED EXTENDING BACK TOWARD THE WALL TO A DISTANCE NO MORE THAN 6 INCHES FROM THE BACK WALL. THE TOE CLEARANCE SPACE MUST BE FREE OF EQUIPMENT OR OBSTRUCTIONS.

8. A CLEAR FLOOR SPACE 30 INCHES BY 48 INCHES COMPLYING WITH **SECTION 11B-305** SHALL BE PROVIDED IN FRONT OF A LAVATORY TO ALLOW FORWARD APPROACH. SUCH CLEAR FLOOR SPACE SHALL ADJOIN OR OVERLAP AN ACCESSIBLE ROUTE AND SHALL EXTEND A MAXIMUM OF 19 INCHES INTO KNEE AND TOE SPACE UNDERNEATH THE LAVATORY.

9. HOT WATER AND DRAIN PIPES ACCESSIBLE UNDER LAVATORIES SHALL BE INSULATED OR OTHERWISE COVERED. THERE SHALL BE NO SHARP OR ABRASIVE SURFACES UNDER LAVATORIES.

10. FAUCET CONTROLS AND OPERATING MECHANISMS SHALL BE OPERABLE WITH ONE HAND IN ACCORDANCE WITH THIS CHAPTER AND SHALL NOT REQUIRE TIGHT GRASPING, PINCHING OR TWISTING OF THE WRIST. THE FORCE REQUIRED TO ACTIVATE CONTROLS SHALL BE NO GREATER THAN 5 LBF. LEVER-OPERATED, PUSH-TYPE AND ELECTRONICALLY CONTROLLED MECHANISMS (PREFERABLE) ARE EXAMPLES OF ACCEPTABLE DESIGNS. SELF-CLOSING VALVES ARE ALLOWED IF THE FAUCET REMAINS OPEN FOR AT LEAST 10 SECONDS.

11. MIRRORS SHALL BE MOUNTED WITH THE BOTTOM EDGE OF THE REFLECTING SURFACE NO HIGHER THAN 40 INCHES FROM THE FLOOR.

12. WHERE TOWEL, SANITARY NAPKINS, WASTE RECEPTACLES, DISPENSERS, OTHER EQUIPMENT AND CONTROLS ARE PROVIDED, AT LEAST ONE OF EACH TYPE SHALL BE LOCATED ON AN ACCESSIBLE ROUTE, WITH ALL OPERABLE PARTS, INCLUDING COIN SLOTS, WITHIN 40 INCHES FROM THE FINISHED FLOOR AND SHALL COMPLY WITH **SECTION 11B-309**, CONTROLS AND OPERATING MECHANISMS.

13. TOILET TISSUE DISPENSERS SHALL BE LOCATED ON THE WALL 7" TO 9" IN THE FRONT EDGE OF THE TOILET BOWL MEASURED TO THE CENTERLINE OF THE DISPENSER, MOUNTED 1 1/2" MINIMUM BELOW THE GRAB BAR, AT A MINIMUM HEIGHT OF 19" MINIMUM TO THE OUTLET OF THE DISPENSER. DISPENSERS THAT CONTROL DELIVERY OR THAT DO NOT PERMIT CONTINUOUS PAPER FLOW SHALL NOT BE USED.

14. GRAB BARS, TUB AND SHOWER SEATS, FASTENERS AND MOUNTING DEVICES SHALL BE DESIGNED FOR A 250-LB. POINT LOAD.

15. WHERE COAT HOOKS ARE PROVIDED IN TOILET ROOMS OR TOILET COMPARTMENTS AT LEAST ONE IN EACH AREA SHALL BE MOUNTED WITHIN 48" FROM THE FLOOR OR GROUND SURFACE.

16. AT LEAST ONE BABY CHANGE, WHEN PROVIDED, SHALL BE MOUNTED SO THAT THE COUNTER SURFACE, WHEN OPEN, IS NOT MORE THAN 34" ABOVE THE FINISH FLOOR AND THE HANDLE, WHEN CLOSED, IS NO HIGHER THAN 48" ABOVE THE FINISH FLOOR. THE COUNTER SURFACE SHALL PROVIDE 27" HIGH KNEE CLEARANCE WHEN FULLY OPEN.
BABY CHANGING TABLES SHALL NOT OBSTRUCT THE REQUIRED WIDTH OF AN ACCESSIBLE ROUTE, OR BE LOCATED IN A TOILET COMPARTMENT.

17. RESTROOM DISPENSERS AND ACCESSORIES SHALL BE MOUNTED SO THEY DO NOT PROTRUDE INTO THE ACCESSIBLE ROUTES GREATER THAN 4".

GRAB BAR:

1. GRAB BARS FOR WATER CLOSETS NOT LOCATED WITHIN A COMPARTMENT SHALL COMPLY WITH **SECTION 11B-604.5** AND SHALL BE PROVIDED ON THE SIDE WALL CLOSEST TO THE WATER CLOSET AND ON THE REAR WALL. GRAB BARS FOR WATER CLOSETS LOCATED WITHIN AN ACCESSIBLE COMPARTMENT SHALL COMPLY WITH **SECTION 11B-604.8.1.5** AND SHALL BE PROVIDED ON THE SIDE WALL CLOSEST TO THE WATER CLOSET AND ON THE REAR WALL. GRAB BARS FOR WATER CLOSETS LOCATED WITHIN AMBULATORY ACCESSIBLE COMPARTMENTS SHALL COMPLY WITH **SECTION 11B-604.8.2.3** AND SHALL BE PROVIDED ON BOTH SIDES OF THE COMPARTMENT.

2. THE DIAMETER OR WIDTH OF THE GRIPPING SURFACES OF A GRAB BAR SHALL BE 1-1/4" TO 2" OR THE SHAPE SHALL PROVIDE AN EQUIVALENT GRIPPING SURFACE. GRAB BARS SHALL NOT PROJECT MORE THAN 3" INTO ANY REQUIRED CLEAR SPACES.

3. IF THE GRAB BARS ARE MOUNTED ADJACENT TO A WALL, THE SPACE BETWEEN THE WALL AND THE GRAB BARS SHALL BE 1-1/2 INCHES. NO OBJECT TO BE LOCATED WITH IN 1-1/2" BELOW OR 12" ABOVE GRAB BARS.

4. A GRAB BAR AND ANY WALL OR OTHER SURFACE ADJACENT TO IT, SHALL BE FREE OF ANY SHARP OR ABRASIVE ELEMENTS.

5. EDGES SHALL HAVE A MINIMUM RADIUS OF 1/8 INCH.

6. THE STRUCTURAL STRENGTH OF GRAB BARS, TUB AND SHOWER SEATS, FASTENERS, AND MOUNTING DEVICES SHALL MEET THE FOLLOWING SPECIFICATIONS.

6A. BENDING STRESS IN A GRAB BAR OR SEAT INDUCED BY THE MAXIMUM BENDING MOMENT FROM THE APPLICATION OF A 250-LB POINT LOAD SHALL BE LESS THAN THE ALLOWABLE STRESS FOR THE MATERIAL OF THE GRAB BAR OR SEAT.

6B. SHEAR STRESS INDUCED IN A GRAB BAR OR SEAT BY THE APPLICATION OF A 250-LB POINT LOAD SHALL BE LESS THAN THE ALLOWABLE SHEAR STRESS FOR THE MATERIAL OF THE GRAB BAR OR SEAT, AND ITS MOUNTING BRACKET OR OTHER SUPPORT IS CONSIDERED TO BE FULLY RESTRAINED, THEN DIRECT AND TORSIONAL SHEAR STRESSES SHALL NOT EXCEED THE ALLOWABLE SHEAR STRESS.

6C. SHEAR FORCE INDUCED IN FASTENER OR MOUNTING DEVICE FROM THE APPLICATION OF A 250-LB POINT LOAD SHALL BE LESS THAN THE ALLOWABLE LATERAL LOAD OF EITHER THE FASTENER OR MOUNTING DEVICE OR THE SUPPORTING STRUCTURE, WHICHEVER HAS THE SMALLER ALLOWABLE LOAD.

6D. TENSILE FORCE INDUCED IN A FASTENER BY A DIRECT TENSION FORCE OF A 250-LB POINT LOAD, PLUS THE MAXIMUM MOMENT FROM THE APPLICATION OF A 250-LB POINT LOAD, SHALL BE LESS THAN THE ALLOWABLE WITHDRAWAL LOAD BETWEEN THE FASTENER AND SUPPORTING STRUCTURE.

6E. GRAB BARS SHALL NOT ROTATE WITHIN THEIR FITTINGS.

SIGNS & IDENTIFICATION:

1. CHARACTERS SHALL BE SELECTED FORM FONTS WHERE THE WIDTH OF THE UPPERCASE LETTER "O" IS 60% MINIMUM AND 110% MAXIMUM OF THE HEIGHT OF THE UPPERCASE LETTER "T".

2. CHARACTERS AND NUMBERS ON SIGNS SHALL CONTRAST WITH THEIR BACKGROUND, EITHER LIGHT CHARACTERS ON A DARK BACKGROUND OR DARK CHARACTERS ON A LIGHT BACKGROUND.

3. CHARACTERS AND NUMBER ON SIGNS SHALL BE SIZED ACCORDING TO THE VIEWING DISTANCE FROM WHICH THEY ARE TO BE READ. THE MINIMUM HEIGHT IS MEASURED USING AN UPPER CASE I. LOWER CASE CHARACTERS ARE PERMITTED. FOR SIGNS SUSPENDED OR PROJECTED ABOVE THE FINISHED FLOOR IN COMPLIANCE WITH **SECTION 11B-703.5.5-6.**

4. CONTRACTED GRADE 2 BRAILLE SHALL BE USED WHEREVER BRAILLE SYMBOLS ARE SPECIFICALLY REQUIRED IN OTHER PORTIONS OF THESE REGULATION. DOTS SHALL BE 1/10" ON CENTERS IN EACH CELL WITH 2/10" SPACE BETWEEN CELLS. DOTS SHALL BE RAISED A MINIMUM OF 1/40" ABOVE THE BACKGROUND. THE INDICATION OF UPPERCASE LETTERS SHALL ONLY BE USED BEFORE THE FIRST WORD OF SENTENCES, PROPER NOUNS AND NAMES, INDIVIDUAL LETTER OF THE ALPHABET, INITIALS, AND ACRONYMS.

4A. ALL BUILDING ENTRANCES THAT ARE ACCESSIBLE TO AND USABLE BY PERSONS WITH DISABILITIES AND AT EVERY MAJOR JUNCTION ALONG OR LEADING TO AN ACCESSIBLE ROUTE OF TRAVEL SHALL BE IDENTIFIED WITH A SIGN DISPLAYING THE INTERNATIONAL SYMBOL OF ACCESSIBILITY AND WITH ADDITIONAL DIRECTIONAL SIGNS, AS REQUIRED, TO BE VISIBLE TO PERSONS ALONG APPROACHING PEDESTRIAN WAYS.

ACCESSIBLE MEANS OF EGRESS AND COMMUNICATION ELEMENTS

1. TACTILE SIGNS CONTAINING BRAILLE SHALL BE PROVIDED PER SECTION 11B-703.

2. TACTILE EXIT SIGNS SHALL BE REQUIRED AT THE FOLLOWING LOCATIONS:

3. EACH GRADE-LEVEL EXTERIOR EXIT DOOR SHALL BE IDENTIFIED BY A TACTILE EXIT WITH THE WORD, "EXIT."

4. NOT USED

5. EACH EXIT DOOR THAT LEADS DIRECTLY TO A GRADE-LEVEL EXTERIOR EXIT BY MEANS OF AN EXIT ENCLOSURE OR AN EXIT PASSAGEWAY SHALL BE IDENTIFIED BY A TACTILE EXIT SIGN WITH THE WORDS, "EXIT ROUTE."

6. EACH EXIT ACCESS DOOR FROM AN INTERIOR ROOM OR AREA TO A CORRIDOR OR HALLWAY THAT IS REQUIRED TO HAVE A VISUAL EXIT SIGN SHALL BE IDENTIFIED BY A TACTILE EXIT SIGN WITH THE WORDS, "EXIT ROUTE."

7. EACH EXIT DOOR THROUGH A HORIZONTAL EXIT SHALL BE IDENTIFIED BY A SIGN WITH THE WORDS, "TO EXIT."

8. PERMANENT ROOM SIGNAGE: (2013 CBC) - WHEN RAISED CHARACTERS ARE REQUIRED OR WHEN PICTORIAL SYMBOLS (PICTOGRAMS) ARE USED ON SUCH SIGNS, THEY SHALL CONFORM TO THE FOLLOWING REQUIREMENTS:

9. CHARACTER TYPE: CHARACTERS ON SIGNS SHALL BE RAISED 1/32 INCH MINIMUM AND SHALL BE SANS SERIF UPPERCASE CHARACTERS ACCOMPANIED BY GRADE 2 BRAILLE COMPLYING WITH **SECTION 11B-703.2.**

10. CHARACTER HEIGHT: RAISED CHARACTERS SHALL BE A MINIMUM OF 5/8 INCH AND A MAXIMUM OF 2 INCHES HIGH.

11. PICTORIAL SYMBOL SIGNS (PICTOGRAMS): PICTORIAL SYMBOLS SIGNS (PICTOGRAMS) SHALL BE ACCOMPANIED BY THE VERBAL DESCRIPTION PLACED DIRECTLY BELOW THE PICTOGRAM. THE OUTSIDE DIMENSION OF THE PICTOGRAM FIELD SHALL BE A MINIMUM OF 6 INCHES IN HEIGHT.

12. CHARACTER POSITION: CHARACTERS AND BRAILLE SHALL BE IN A HORIZONTAL FORMAT. BRAILLE SHALL BE PLACED A MINIMUM OF 3/8 INCH AND A MAXIMUM OF 1/2 INCH DIRECTLY BELOW THE TACTILE CHARACTERS AND 3/8" MINIMUM FROM RAISED BORDERS AND DECORATIVE ELEMENTS; FLUSH LEFT OR CENTERED. WHEN TACTILE TEXT IS MULTILINED, ALL BRAILLE SHALL BE PLACED TOGETHER BELOW ALL LINES OF TACTILE TEXT.

13. MOUNTING LOCATION AND HEIGHTS. WHERE PERMANENT IDENTIFICATION IS PROVIDED FOR ROOMS AND SPACES, RAISED LETTERS SHALL BE ACCOMPANIED BY BRAILLE IN CONFORMANCE WITH **SECTION 11B-703.4.** SIGNS SHALL BE INSTALLED ON THE WALL ADJACENT TO THE LATCH OUTSIDE THE DOOR. WHERE THERE IS NO WALL SPACE ON THE LATCH SIDE, INCLUDING AT DOUBLE LEAF FLOORS, SIGNS SHALL BE PLACED ON NEAREST ADJACENT WALL, PREFERABLY ON THE RIGHT. MOUNTING HEIGHT SHALL BE LOCATED MINIMUM 48 INCHES ABOVE THE FINISH FLOOR OR GROUND SURFACE MEASURED FROM THE BASELINE OF THE LOWEST BRAILLE CELLS AND 60 INCHES MAXIMUM ABOVE THE FINISH FLOOR OR GROUND SURFACE, MEASURED TO THE BASELINE OF THE HIGHEST LINE OF RAISED CHARACTERS.

14. SIGNS CONTAINING TACTILE CHARACTERS SHALL BE LOCATED SO THAT A CLEAR FLOOR SPACE OF 18 INCHES MINIMUM BY 18 INCHES MINIMUM, CENTERED ON THE TACTILE CHARACTER, IS PROVIDED BEYOND THE ARCH OR ANY DOOR SWING BETWEEN THE CLOSED POSITION AND 45 DEGREE OPEN POSITION.

WORK SURFACES

1. HEIGHT OF WORK SURFACES: THE TOPS OF TABLES AND COUNTERS SHALL BE 28 INCHES TO 34 INCHES FROM THE FLOOR OR GROUND.

APPROVAL

CITY APPROVED BY:

DIRECTOR OF PUBLIC WORKS — DATE

CITY REVIEWED BY:

SENIOR ENGINEER — DATE

SUBMITTED BY:

DATE

CLIENT

LANCASTER
Creating a better tomorrow. Together.

CITY OF LANCASTER

44933 FERN AVENUE
LANCASTER, CA 93534

PROJECT NAME

SAMARITAN'S PURSE PARK FORMERLY KNOWN AS EL DORADO PARK RENOVATION

PWCP NO. 24-008

44501 5TH ST EAST
LANCASTER, CA 93535

ENGINEER/ARCHITECT

IDS

IDS GROUP

1 PETERS CANYON ROAD, SUITE 130
IRVINE, CA. 92606
TEL: 949-387-8500, FAX: 949-387-0800

STAMP

LICENSED ARCHITECT
JOHN JOSEPH SILBER
No. C 15573
REN. 7-31-25
STATE OF CALIFORNIA

ISSUE

REV.	DESCRIPTION	DATE
	30% CD SET	12/15/23
	60% CD SET	01/12/24
	90% CD SET	02/26/24
1	CLIENT REVISIONS	04/26/24
2	BID SET	09/10/24
3	BULLETIN #1	10/25/24
4	BULLETIN #1 R1	2/14/25
	COMPOSITE SET	9/24/25

PROJECT IDENTIFICATION

THIS DRAWING WAS CREATED IN REVIT V. 2020 UNLESS OTHERWISE NOTED.

THE ORIGINAL SIZE OF THIS SHEET IS 30" X 42"

THESE DRAWINGS AND SPECIFICATIONS ARE THE PROPERTY AND COPYRIGHT OF IDS GROUP AND SHALL NOT BE USED ON ANY OTHER PROJECT OR LOCATIONS EXCEPT AS DESCRIBED ON THE DRAWINGS, WITHOUT THE WRITTEN AGREEMENT WITH IDS GROUP.

IDS PROJECT NO.	22X099.03
IDS DRAWN BY	MJ
IDS CHECKED BY	MM
IDS APPROVED BY	JS

SHEET TITLE

ACCESSIBILITY COMPLIANCE NOTES

SHEET NUMBER

G-010

IDS GROUP - FILE LOCATION: C:\Users\mahsa.javaherian\Documents\22X099.01 LANC - El DORADO PARK (E) COMMUNITY CENTER RENOVATION_ARCH_RVT2022_mahsa.javaherianUWDS7.rvt PLOT DATE: 10/29/2024 4:32:33 PM USER: Author

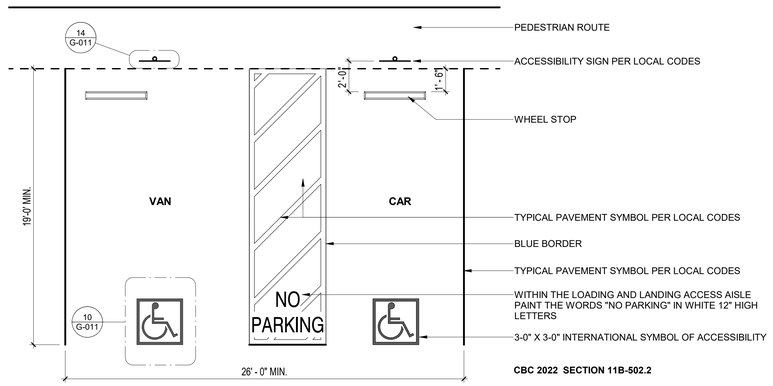

CBC 2022 SECTION 11B-502.2

ACCESSIBLE PARKING SPACES | 1/4" = 1'-0" | 11

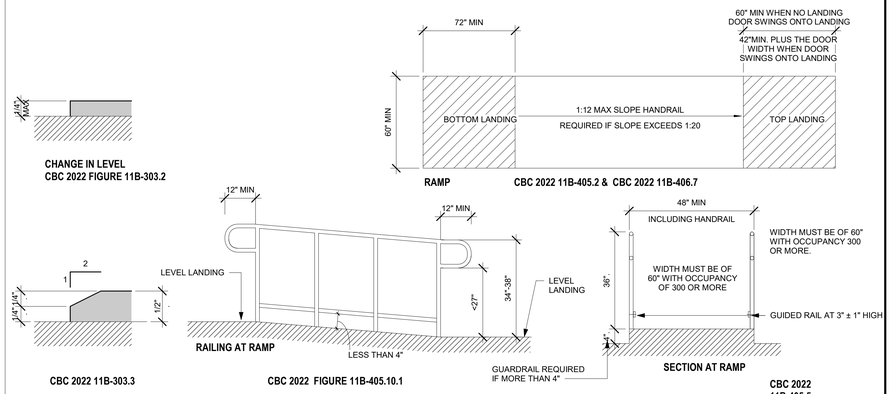

RAMP/PROJECTIONS OF HANDRAILS TYP. | 1/4" = 1'-0" | 3

H.C. SIGNAGE

ACCESSIBLE PARKING SIGN | 1 1/2" = 1'-0" | 14

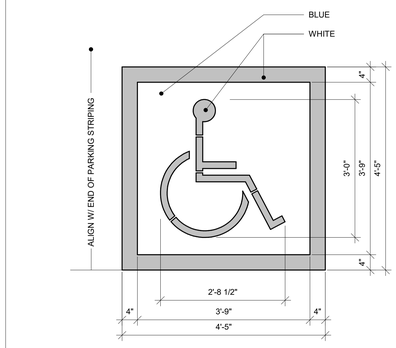

CALTRANS STANDARD , A24 C CBC 2022 SECTION 11B-502.6.4.1

ACCESSIBLE SYMBOL | 3/4" = 1'-0" | 10

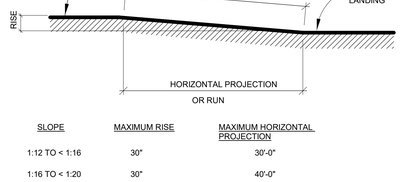

SLOPE	MAXIMUM RISE	MAXIMUM HORIZONTAL PROJECTION
1:12 TO < 1:16	30"	30'-0"
1:16 TO < 1:20	30"	40'-0"

CBC 2022 1114A.4.1 EXTERIOR RAMPS AND LANDINGS ON ACCESSIBLE ROUTES

SINGLE RUN RAMP | 1/4" = 1'-0" | 6

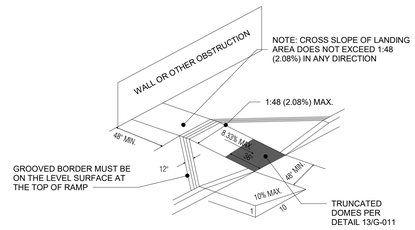

NOTE: TRUNCATED DOME DETECTABLE WARNING SURFACE IS REQUIRED ON SHADED PORTION OF RAMP.

CBC 2022 11B-406.5.3

CURB DETAIL | 1 1/2" = 1'-0" | 2

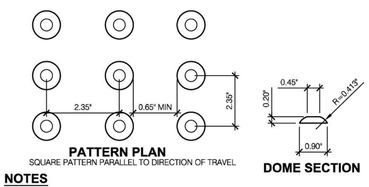

PATTERN PLAN

SQUARE PATTERN PARALLEL TO DIRECTION OF TRAVEL

DOME SECTION

NOTES

A. MATERIAL USED SHALL BE OF YELLOW, CONFORMING TO FS33538 OF FEDERAL STANDARD 595C AND SHALL BE AN INTEGRAL PART OF THE WALKING SURFACE.

B. WARNING SURFACE TO BE FIRM AND SLIP RESISTANT, MAY INCLUDE, BUT NOT LIMITED TO THE FOLLOWING SURFACES: NATURAL STONE OR STONE COMPOSITE, CERAMIC TILE, DURABLE PRECAST CONCRETE SCALES, RIGID OR FLEXIBLE COMPOSITES.

C. FASTEN ALL SURFACE MOUNTED APPLICATIONS IN STRICT ACCORDANCE WITH MANUFACTURER SPECIFICATIONS.

D. REFER TO CALIFORNIA BUILDING CODE SECTION 705 FOR SPECIFICATIONS AND INSTALLATION DETAILS. VERTICAL TRANSITIONS DUE TO INSTALLATION TO COMPLY WITH ALL APPLICABLE CALIFORNIA BUILDING CODE SPECIFICATIONS.

CBC 2022 SECTION 11B-705.1

TRUNCATED DOME DETAIL | 1/4" = 1'-0" | 13

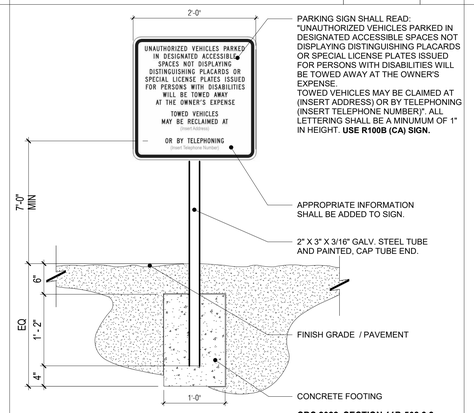

CBC 2022 SECTION 11B-502.8.2

PARKING SIGN DETAIL | 1" = 1'-0" | 9

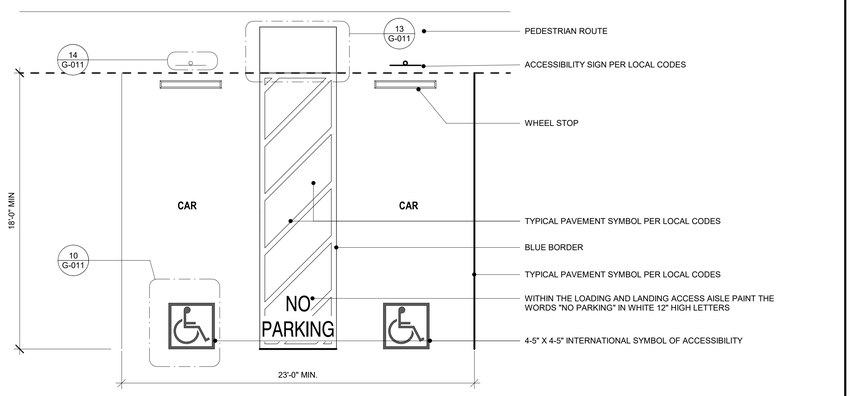

CBC 2022 SECTION 11B-502.3

ACCESSIBLE PARKING SPACES | 1/4" = 1'-0" | 1

APPROVAL

CITY APPROVED BY:

DIRECTOR OF PUBLIC WORKS DATE

CITY REVIEWED BY:

SENIOR ENGINEER DATE

SUBMITTED BY:

DATE

CLIENT

LANCASTER

Creating a better tomorrow. Together.

CITY OF LANCASTER

44933 FERN AVENUE
LANCASTER, CA 93534

PROJECT NAME

SAMARITAN'S PURSE PARK FORMERLY KNOWN AS EL DORADO PARK RENOVATION

PWCP NO. 24-008

44501 5TH ST EAST
LANCASTER, CA 93535

ENGINEER/ARCHITECT

IDS

IDS GROUP

1 PETERS CANYON ROAD, SUITE 130
IRVINE, CA. 92606
TEL: 949-387-8500, FAX: 949-387-0800

STAMP

REGISTERED ARCHITECT
MICHAEL JOSEPH SHERIDAN
No. 5573
REN. 7-31-25
STATE OF CALIFORNIA

ISSUE

REV.	DESCRIPTION	DATE
	30% CD SET	12/15/23
	60% CD SET	01/12/24
	90% CD SET	02/26/24
1	CLIENT REVISIONS	04/26/24
2	BID SET	09/10/24
3	BULLETIN #1	10/25/24
4	BULLETIN #1 R1	2/14/25
	COMPOSITE SET	9/24/25

PROJECT IDENTIFICATION

THIS DRAWING WAS CREATED IN REVIT V. 2020 UNLESS OTHERWISE NOTED.

THE ORIGINAL SIZE OF THIS SHEET IS 30" X 42"

THESE DRAWINGS AND SPECIFICATIONS ARE THE PROPERTY AND COPYRIGHT OF IDS GROUP AND SHALL NOT BE USED ON ANY OTHER PROJECT OR LOCATIONS EXCEPT AS DESCRIBED ON THE DRAWINGS, WITHOUT THE WRITTEN AGREEMENT WITH IDS GROUP.

IDS PROJECT NO.	22X099.03
IDS DRAWN BY	MJ
IDS CHECKED BY	MM
IDS APPROVED BY	JS

SHEET TITLE

ACCESSIBLE SITE & PARKING DETAILS

SHEET NUMBER

G-011

IDS GROUP - FILE LOCATION: C:\Users\mahsa.javaherian\Documents\22X099.01 LANC - EI DORADO PARK (E) COMMUNITY CENTER RENOVATION_ ASDC_EN170202_mahsa.javaherian.rvt
PLOT DATE: 10/29/2024 4:32:34 PM
USER: MF

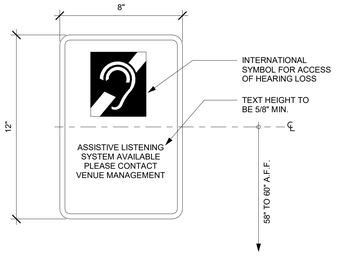

NOTE:

- EACH ASSEMBLY AREA REQUIRED BY SECTION 11B-219 TO PROVIDE ASSISTIVE LISTENING SYSTEMS SHALL PROVIDE SIGNS INFORMING PATRONS OF THE AVAILABILITY OF THE ASSISTIVE LISTENING SYSTEM. THE SIGN SHALL INCLUDE WORDING THAT STATES "ASSISTIVE LISTENING SYSTEM AVAILABLE" AND SHALL BE POSTED IN A PROMINENT PLACE AT OR NEAR THE ASSEMBLY AREA ENTRANCE. ASSISTIVE LISTENING SIGNS SHALL COMPLY WITH SECTION 11B-703.5 AND SHALL INCLUDE THE INTERNATIONAL SYMBOL OF ACCESS FOR HEARING LOSS COMPLYING WITH SECTION 11B-703.7.2.4.

- PORTABLE DEVICES SHALL BE STORED AND MADE AVAILABLE UPON REQUEST

ASSISTIVE LISTENING SIGN | 3" = 1'-0" | 18

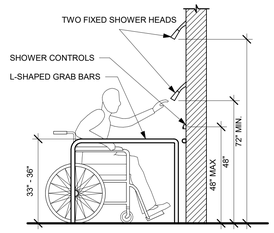

OUTDOOR SHOWER SHOWERHEAD HEIGHT | 1/2" = 1'-0" | 12

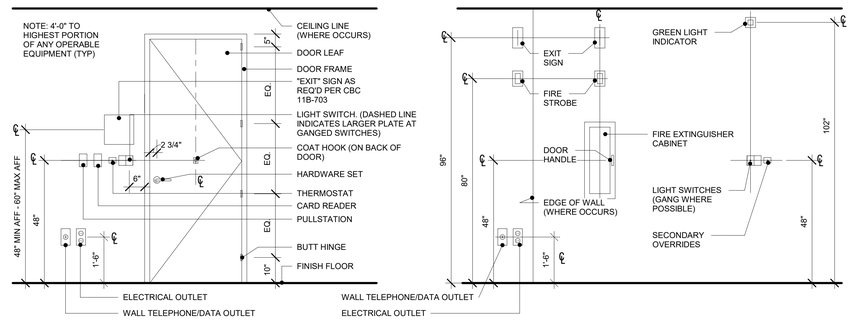

NOTE:
TOP OF SWITCH TO BE AT 48" A.F.F. MAXIMUM. CENTER ALL OTHER DEVICES ON CENTERLINE OF LIGHT SWITCHES. TOP OF SWITCH TO BE AT 40" A.F.F. MAXIMUM WHERE SWITCH IS LOCATED ABOVE A COUNTER. INSTALL ELECTRICAL AND TELEPHONE WALL OUTLETS AND SWITCH PLATES TO NEAREST STUD LOCATION AS SCALED ON PLAN, UNLESS DIMENSIONED OTHERWISE.

DEVICE MOUNTING HEIGHTS | 1/2" = 1'-0" | 8

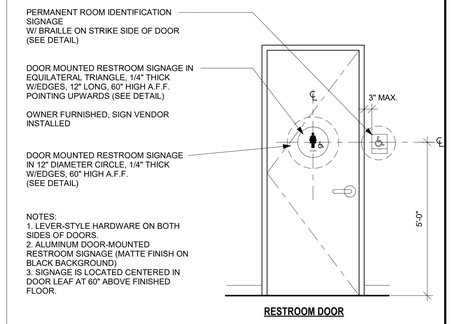

NOTES:
1. LEVER-STYLE HARDWARE ON BOTH SIDES OF DOORS.
2. ALUMINUM DOOR-MOUNTED RESTROOM SIGNAGE (MATTE FINISH ON BLACK BACKGROUND)
3. SIGNAGE IS LOCATED CENTERED IN DOOR LEAF AT 60" ABOVE FINISHED FLOOR.

RESTROOM DOOR

ACCESSIBLE RESTROOM SIGNAGE | 1/2" = 1'-0" | 4

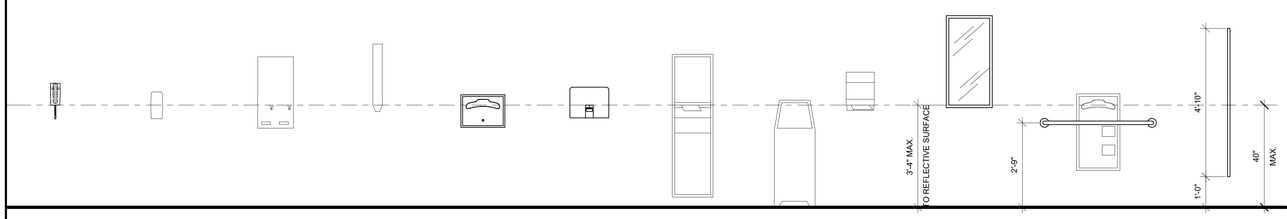

TELEPHONE | SOAP DISPENSER | SANITARY NAPKINS | CUPS | SEATCOVER DISPENSER | HAND DRYER | TOWELS & TRASH | WASTE | TOWELS | MIRROR | GRAB BAR WITH COMBINATION UNIT | TYPICAL PARTITION

ACCESSORIES - WHERE TOWEL OR SANITARY NAPKIN DISPENSERS, WASTE RECEPTACLES, OR OTHER ACCESSORIES ARE PROVIDED IN TOILET FACILITIES, AT LEAST ONE OF EACH TYPE SHALL BE LOCATED ON AN ACCESSIBLE ROUTE. ALL OPERABLE PARTS, INCLUDING COIN SLOTS, SHALL BE 40 INCHES (1016 MM) MAXIMUM ABOVE THE FINISH FLOOR.**CBC 2022 FIGURE 11B-603.5**

CBC 2022 FIGURE 11B-603.3

CBC 2022 FIGURE 11B-604.5.1
CBC 2022 FIGURE 11B-604.7

CBC 2022 FIGURE 11B-604.8.14

ACCESSIBLE WALL MOUNTED ACCESSORIES | 1/2" = 1'-0" | 11

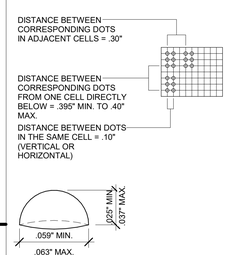

BRAILLE DOT DIAMETER = .059" MIN. TO .063" MAX. ROUNDED OR DOMED DOT (ACCEPTABLE) SQUARE DOT (NOT ACCEPTABLE)

NOTE: REFER TO SECTION 10 14.00 OF SPECIFICATIONS FOR THE LISTING OF SIGN TYPE W/ TACTILE BRAILLE.

1. TACTILE SIGNAGE SHALL COMPLY W/ CBC 11B-703 & ADAAG 703.

2. CHARACTER TYPE: CHARACTERS ON SIGNS SHALL BE RAISED 1/32 INCH (0.794mm) MIN. AND SHALL BE SANS SERIF UPPERCASE CHARACTERS ACCOMPANIED BY GRADE 2 BRAILLE (SEE NOTE 6 BELOW).

3. CHARACTER SIZE: RAISED CHARACTERS SHALL BE A MIN. OF 5/8" (15.9mm) AND A MAX. OF 2 INCHES (51mm) HIGH.

4. FINISH AND CONTRAST: CONTRAST BETWEEN CHARACTERS, SYMBOLS AND THEIR BACKGROUND MUST BE 70% MIN. AND HAVE A NON-GLARE FINISH.

5. PROPORTION: CHARACTERS SHALL BE SELECTED FROM FONTS WHERE THE WIDTH OF THE UPPERCASE LETTER "O" IS 60% MIN. AND 110% MAX. OF THE HEIGHT OF THE UPPERCASE LETTER "I".

6. BRAILLE: CALIFORNIA CONTRACTED GRADE 2 BRAILLE SHALL BE USED WHEREVER BRAILLE IS REQUIRED IN OTHER PORTIONS OF THESE STANDARDS. DOTS SHALL BE 1/10 INCH (2.54mm) ON CENTER IN EACH CELL WITH 3/10 INCH (7.6 mm) SPACE BETWEEN CORRESPONDING DOTS IN ADJACENT CELLS (MEASURED FROM THE FIRST COLUMN OF DOTS IN THE FIRST CELL TO THE FIRST COLUMN OF DOTS IN THE SECOND CELL). DOTS SHALL BE RAISED A MIN. OF 1/40 INCH (0.635mm) ABOVE THE BACKGROUND. THE INDICATION OF UPPERCASE LETTERS SHALL ONLY BE USED BEFORE THE FIRST WORD OF SENTENCES, PROPER NOUNS AND NAMES, INDIVIDUAL LETTERS OF THE ALPHABET, INITIALS, AND ACRONYMS.

ACCESSIBLE TACTILE SIGNAGE/BRAILLE | NTS | 7

TYP. RESTROOM SIGNAGE

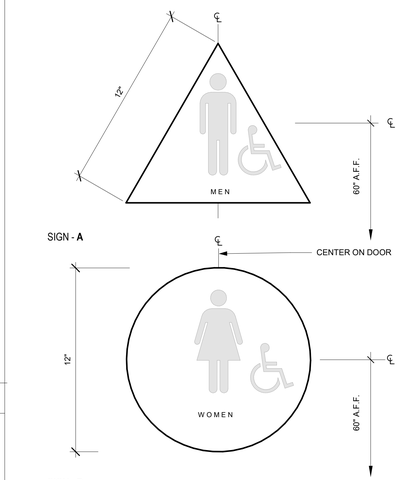

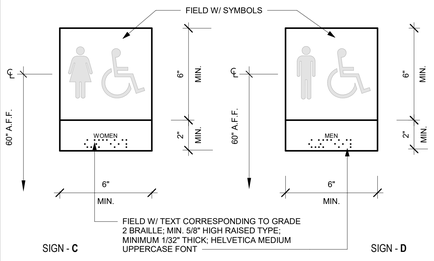

NOTE: PICTORIAL SYMBOL SIGNS SHALL BE ACCOMPANIED BY THE EQUIVALENT WRITTEN DESCRIPTION PLACED DIRECTLY BELOW THE PICTOGRAM. THE BORDER DIMENSION OF ANY PICTOGRAM SHALL BE A MINIMUM OF 6" IN HEIGHT. TOILET ROOM SIGNS SHALL BE 1/4" THICK MATERIAL AND SHALL BE A CONTRASTING COLOR TO THE DOOR AND BACKGROUND.

ACCESSIBILE RESTROOM SIGN | 3" = 1'-0" | 2

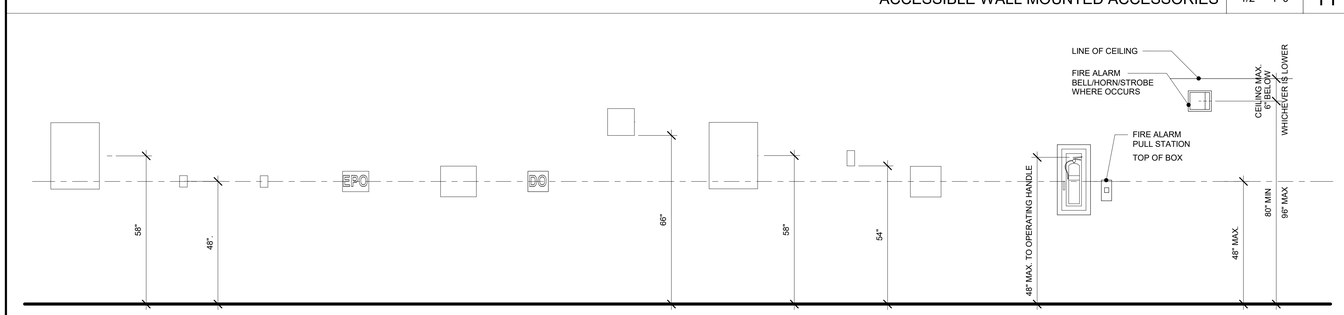

VALVE BOX | THERMOSTAT | TEMPERATURE SWITCH | EMERGENCY POWER OFF | RTP PALLET | DOOR OPENER | MEDICAL GAS ALARM | MED-GAS ALARM PANEL | NURSE CALL LIGHT | SHARP CONTAINER | FIRE EXTINGUISHER CABINET | FIRE ALARM PULL STATION | FIRE ALARMS

CBC 2022 11B-906.9.1

CBC 2022 11B-308.2 & 11B-308.2

ACCESSIBLE MOUNTING HEIGHTS | 1/2" = 1'-0" | 10

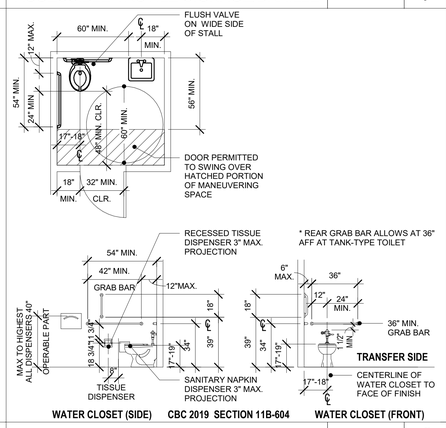

ACCESSIBLE TOILET FACILITIES | 1/4" = 1'-0" | 6

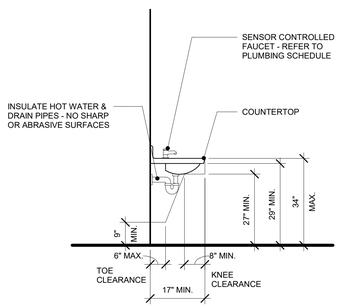

CBC 2022 SECTION 11B-306.2

ACCESSIBLE LAVATORY/SINK | 1/2" = 1'-0" | 17

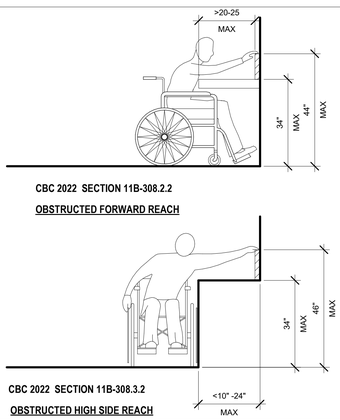

CBC 2022 SECTION 11B-308.2.2

OBSTRUCTED FORWARD REACH

CBC 2022 SECTION 11B-308.3.2

OBSTRUCTED HIGH SIDE REACH

OBSTRUCTED REACH | 1/2" = 1'-0" | 13

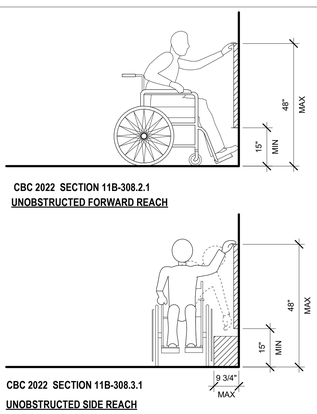

CBC 2022 SECTION 11B-308.2.1

UNOBSTRUCTED FORWARD REACH

CBC 2022 SECTION 11B-308.3.1

UNOBSTRUCTED SIDE REACH

UNOBSTRUCTED REACH | 1/2" = 1'-0" | 9

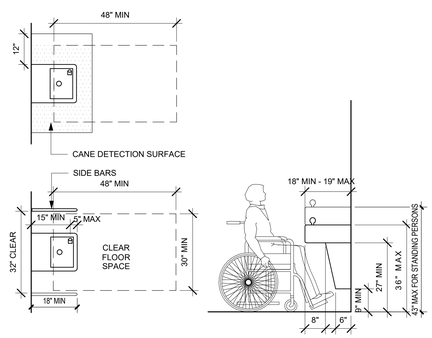

A. PLAN

B. SIDE ELEVATION

ACCESSIBLE DRINKING FOUNTAIN | 1/2" = 1'-0" | 5

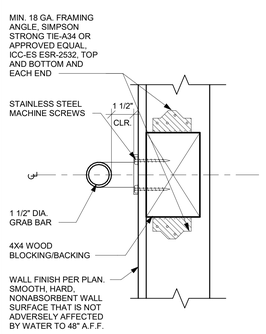

GRAB BAR BACKING | 3" = 1'-0" | 3

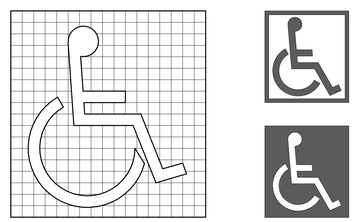

PROPORTIONS | **DISPLAY CONDITIONS**

CBC 2022 FIGURE 11B-703.7.2.1

INTERNATIONAL ACCESSIBILITY SYMBOL | N.T.S. | 1

APPROVAL

CITY APPROVED BY:

DIRECTOR OF PUBLIC WORKS — DATE
CITY REVIEWED BY:
SENIOR ENGINEER — DATE
SUBMITTED BY:
DATE

CLIENT

LANCASTER
Creating a better tomorrow. Together.

CITY OF LANCASTER

44933 FERN AVENUE
LANCASTER, CA 93534

PROJECT NAME

SAMARITAN'S PURSE PARK FORMERLY KNOWN AS EL DORADO PARK RENOVATION

PWCP NO. 24-008

44501 5TH ST EAST
LANCASTER, CA 93535

ENGINEER/ARCHITECT

IDS

IDS GROUP

1 PETERS CANYON ROAD, SUITE 130
IRVINE, CA. 92606
TEL: 949-387-8500, FAX: 949-387-0800

STAMP

REGISTERED ARCHITECT — JOSEPH SIEGMUND — No. C-15573 — REN. 7-31-25 — STATE OF CALIFORNIA

ISSUE

REV.	DESCRIPTION	DATE
	30% CD SET	12/15/23
	60% CD SET	01/12/24
	90% CD SET	02/26/24
1	CLIENT REVISIONS	04/26/24
2	BID SET	09/10/24
3	BULLETIN #1	10/25/24
4	BULLETIN #1 R1	2/14/25
	COMPOSITE SET	9/24/25

PROJECT IDENTIFICATION

THIS DRAWING WAS CREATED IN REVIT V. 2020 UNLESS OTHERWISE NOTED.

THE ORIGINAL SIZE OF THIS SHEET IS 30" X 42"

THESE DRAWINGS AND SPECIFICATIONS ARE THE PROPERTY AND COPYRIGHT OF IDS GROUP AND SHALL NOT BE USED ON ANY OTHER PROJECT OR LOCATIONS EXCEPT AS DESCRIBED ON THE DRAWINGS, WITHOUT THE WRITTEN AGREEMENT WITH IDS GROUP.

IDS PROJECT NO.	22X099.03
IDS DRAWN BY	MJ
IDS CHECKED BY	MM
IDS APPROVED BY	JS

SHEET TITLE

ACCESSIBLE FIXTURES AND SIGNAGE

SHEET NUMBER

G-012

WEST FACADE | 12" = 1'-0" | 16

SOUTH FACADE | 12" = 1'-0" | 12

EQUIPMENT STORAGE #1 | 12" = 1'-0" | 8

CRAFT'S RM #2 | 12" = 1'-0" | 4

PATIO #3 | 12" = 1'-0" | 15

ELEC. EQUIP. #2 | 12" = 1'-0" | 11

OVERHEAD WIRE MESH PARTITION TO BE REMOVED

TOILET #2 | 12" = 1'-0" | 7

CRAFT'S RM #1 | 12" = 1'-0" | 3

OVEHANG @ ENTRANCE | 12" = 1'-0" | 18

PATIO #2 | 12" = 1'-0" | 14

ELEC. EQUIP. #1 | 12" = 1'-0" | 10

TOILET #1 | 12" = 1'-0" | 6

STORAGE | 12" = 1'-0" | 2

ROLL UP DOOR GRILLE | 12" = 1'-0" | 17

PATIO #1 | 12" = 1'-0" | 13

EQUIPMENT STORAGE #2 | 12" = 1'-0" | 9

CRAFT'S RM #3 | 12" = 1'-0" | 5

DIRECTOR'S OFFICE | 12" = 1'-0" | 1

APPROVAL

CITY APPROVED BY:

DIRECTOR OF PUBLIC WORKS DATE

CITY REVIEWED BY:

SENIOR ENGINEER DATE

SUBMITTED BY:

DATE

CLIENT

LANCASTER

Creating a better tomorrow. Together.

CITY OF LANCASTER

44933 FERN AVENUE
LANCASTER, CA 93534

PROJECT NAME

SAMARITAN'S PURSE PARK FORMERLY KNOWN AS EL DORADO PARK RENOVATION

PWCP NO. 24-008

44501 5TH ST EAST
LANCASTER, CA 93535

ENGINEER/ARCHITECT

IDS

IDS GROUP

1 PETERS CANYON ROAD, SUITE 130
IRVINE, CA. 92606
TEL: 949-387-8500, FAX: 949-387-0800

STAMP

REGISTERED ARCHITECT JOSEPH SLEGERS No. C-15573 REN. 7-31-25 STATE OF CALIFORNIA

ISSUE

REV.	DESCRIPTION	DATE
	30% CD SET	12/15/23
	60% CD SET	01/12/24
	90% CD SET	02/26/24
1	CLIENT REVISIONS	04/26/24
2	BID SET	09/10/24
3	BULLETIN #1	10/25/24
4	BULLETIN #1 R1	2/14/25
	COMPOSITE SET	9/24/25

PROJECT IDENTIFICATION

THIS DRAWING WAS CREATED IN REVIT V. 2020 UNLESS OTHERWISE NOTED.

THE ORIGINAL SIZE OF THIS SHEET IS 30" X 42"

THESE DRAWINGS AND SPECIFICATIONS ARE THE PROPERTY AND COPYRIGHT OF IDS GROUP AND SHALL NOT BE USED ON ANY OTHER PROJECT OR LOCATIONS EXCEPT AS DESCRIBED ON THE DRAWINGS, WITHOUT THE WRITTEN AGREEMENT WITH IDS GROUP.

IDS PROJECT NO.	22X099.03
IDS DRAWN BY	MJ
IDS CHECKED BY	MM
IDS APPROVED BY	JS

SHEET TITLE

PHOTOS (FOR REFERENCE ONLY)

SHEET NUMBER

G-013

IDS GROUP - FILE LOCATION: C:\Users\mathea.jayaherian\Documents\22X099.01 LANC - El DORADO PARK (E) COMMUNITY CENTER RENOVATION_ARCH_CENTRAL_mathea.jayaherian.rvt
PLOT DATE: 10/29/2024 4:32:45 PM
USER: Author

CITY OF LANCASTER

PUBLIC WORKS CONSTRUCTION PROJECT NO. 24-008

SAMARITAN'S PURSE PARK RENOVATIONS
44501 5TH ST E LANCASTER CA

GRADING GENERAL NOTES

1. ALL WORK SHALL CONFORM TO THE CURRENT CALIFORNIA BUILDING CODE, STANDARD SPECIFICATIONS FOR PUBLIC WORKS CONSTRUCTION AND "ALL STANDARD PLANS" AND "SPECIAL PROVISIONS" REFERENCED.
2. ALL WORK IN THE PUBLIC RIGHT-OF-WAY SHALL BE PER THE CURRENT CITY OF LANCASTER STANDARDS, POLICIES, CODES, AND PERMIT REQUIREMENTS, AND SHALL BE DONE UNDER THE INSPECTION OF, AND TO THE SATISFACTION OF THE SENIOR DIRECTOR - DEVELOPMENT SERVICES OR HIS REPRESENTATIVE. APPLICATION FOR INSPECTION BY THE CITY OF LANCASTER SHALL BE MADE BY THE CONTRACTOR AT LEAST TWENTY-FOUR (24) HOURS BEFORE THE SERVICES THEREOF WILL BE REQUIRED. PHONE (661) 723-6157.
3. WORK IN PUBLIC STREETS, ONCE BEGUN, SHALL BE PROSECUTED TO COMPLETION WITHOUT DELAY SO AS TO PROVIDE MINIMUM INCONVENIENCE TO ADJACENT PROPERTY OWNERS AND TO THE TRAVELING PUBLIC. FAILURE TO COMPLY WITH THIS REQUIREMENT IS A VIOLATION OF THE CITY OF LANCASTER HIGHWAY PERMIT ORDINANCE.
4. GRADING PERMIT SHALL BE OBTAINED FROM THE CITY OF LANCASTER CAPITAL ENGINEERING DIVISION PRIOR TO START OF WORK. PRECONSTRUCTION MEETING ONSITE IS ALSO REQUIRED PRIOR TO START OF WORK.
5. THE ENGINEER SHALL EXERCISE SUFFICIENT SUPERVISORY CONTROL DURING GRADING AND CONSTRUCTION TO ENSURE COMPLIANCE WITH THE APPROVED PLANS.
6. PRIOR TO REMOVAL OF VEGETATION AND GRADING OF THE SITE, ALL MITIGATION MONITORING AS IDENTIFIED AND ITEMIZED IN THE PLANNING COMMISSION CONDITIONS OF APPROVAL SHALL BE ADDRESSED TO THE SATISFACTION OF THE SENIOR MANAGER-COMMUNITY DEVELOPMENT AND THE SENIOR DIRECTOR-DEVELOPMENT SERVICES. FIELD MONITORING SHALL BE ESTABLISHED AND PERFORMED AS REQUIRED. ANY TIME LIMITATIONS PRESCRIBED SHALL BE STRICTLY ENFORCED.
7. ALL WORK SHALL BE DONE IN ACCORDANCE WITH THE EXCAVATION AND BUILDING CODE OF THE CITY OF LANCASTER AND ANY SPECIAL REQUIREMENTS OF THE PERMIT. ANY VIOLATION WILL RESULT IN THE STOPPING OF ALL WORK UNTIL THE VIOLATION IS CORRECTED.
8. CUT SLOPES SHALL BE NO STEEPER THAN 2 HORIZONTAL TO 1 VERTICAL, OR AS DETERMINED BY THE SOILS ENGINEER.
9. FILL SLOPES SHALL BE NO STEEPER THAN 2 HORIZONTAL TO 1 VERTICAL, OR AS DETERMINED BY THE SOILS ENGINEER.
10. FILLS SHALL BE COMPACTED THROUGHOUT TO AT LEAST 90% OF THE MAXIMUM DRY DENSITY AS DETERMINED BY A.S.T.M. SOIL COMPACTION TEST D1557.
11. THE SOILS ENGINEER SHALL CERTIFY THAT THE REQUIRED INSPECTIONS AND TESTS HAVE BEEN PERFORMED AND THAT SUCH TESTS COMPLY WITH THE CODE.
12. FILL AREAS SHALL BE CLEARED OF ALL VEGETATION AND DEBRIS, SCARIFIED, AND INSPECTED BY THE GRADING INSPECTOR AND SOILS ENGINEER PRIOR TO THE PLACING OF FILL.
13. APPROVED PROTECTIVE MEASURES AND TEMPORARY DRAINAGE PROVISIONS MUST BE USED TO PROTECT ADJOINING PROPERTIES DURING THE GRADING PROJECT.
14. DUST SHALL BE CONTROLLED AS SPECIFIED IN THE DUST CONTROL METHOD LETTER, AVAQMD APPROVED PLANS, GENERAL NOTE 33 AND/OR BY WATERING TO THE SATISFACTION OF THE CITY INSPECTOR.
15. AFTER ALL WORK, INCLUDING THE INSTALLATION OF DRAINAGE STRUCTURES AND PROTECTIVE DEVICES, HAS BEEN COMPLETED AND REQUIRED REPORTS HAVE BEEN SUBMITTED, THE PERMITTEE SHALL REQUEST A ROUGH GRADING INSPECTION FROM THE CITY INSPECTOR.
16. ALL PUBLIC STREETS SHALL BE MAINTAINED FREE OF DUST AND MUD CAUSED BY GRADING OPERATIONS.
17. COMPLY WITH ALL REQUIREMENTS OF THE SOILS REPORT. DATED: APRIL 17, 2023 BY ASSOCIATED SOILS ENGINEER, INC.

    THESE PLANS HAVE BEEN REVIEWED AND APPEAR TO BE IN GENERAL CONFORMITY WITH THE RECOMMENDATIONS OF OUR REPORT DATED APRIL 17, 2023, PROJECT NO. 7111.23 WE MAKE NO REPRESENTATIONS AS TO DIMENSIONS, MEASUREMENTS, CALCULATIONS, OR ANY PORTION OF THE DESIGN.

    DATE: _____ R.C.E. NUMBER: _____

    _____ _____
    SOILS ENGINEER'S NAME: SIGNATURE:
18. ALL CESSPOOLS, SEPTIC TANKS, ETC., TO BE ABANDONED SHALL BE FILLED OR REMOVED IN ACCORDANCE WITH THE CITY OF LANCASTER STANDARDS AND CERTIFIED BY THE SOILS ENGINEER.
19. ANY EXISTING WELLS NOT TO BE USED SHALL BE DESTROYED IN ACCORDANCE WITH WATERWELL STANDARDS: STATE OF CALIFORNIA (SECTIONS 22 AND 23, BULLETIN 74-81, DECEMBER 1981 EDITION).
20. THIS PLAN CONFORMS WITH THE CONDITIONALLY APPROVED BY THE CITY OF LANCASTER PLANNING COMMISSION FOR _____ ON _____
21. THE ENGINEER MUST SET GRADE STAKES FOR ALL DRAINAGE DEVICES AND OBTAIN INSPECTION BEFORE PLACING CONCRETE.
22. THE SOILS ENGINEER MUST APPROVE ALL GRADING INCLUDING THE STABILITY OF ANY SLOPES CREATED, EXISTING, OR REMAINING.
23. NOT LESS THAN ONE FIELD DENSITY TEST WILL BE MADE FOR EACH 2 FOOT VERTICAL LIFT OF FILL NOR LESS THAN ONE SUCH FOR EACH 1,000 CUBIC YARDS OF MATERIAL PLACED.
24. FINISH GRADING WILL BE COMPLETED AND APPROVED, AND SLOPE PLANTING INCLUDING PERMANENT EROSION CONTROL AND IRRIGATION SYSTEMS INSTALLED, BEFORE OCCUPANCY OF BUILDINGS.
25. ESTIMATED CUT = 950 CUBIC YARDS.

    ESTIMATED FILL = 1150 CUBIC YARDS.
26. PROPOSED STARTING DATE: _____ COMPLETION DATE: _____
27. FIELD DENSITY WILL BE DETERMINED BY THE SAND-CONE METHOD A.S.T.M. D1556, UNLESS PRIOR APPROVAL HAS BEEN OBTAINED FROM THE BUILDING OFFICIAL. IN FINE-GRAINED, COHESIVE SOILS, FIELD DENSITY MAY BE DETERMINED BY THE NUCLEAR DENSITY METHOD, A.S.T.M. D2922 & D3017, PROVIDED NOT LESS THAN 10% OF THE REQUIRED DENSITY TESTS, UNIFORMLY DISTRIBUTED, ARE BY THE SAND-CONE METHOD. THE METHOD OF DETERMINING FIELD DENSITY SHALL BE SHOWN IN THE COMPACTION REPORT. OTHER METHODS MAY BE USED IF RECOMMENDED BY THE SOILS ENGINEER AND APPROVED IN ADVANCE BY THE BUILDING OFFICIAL.
28. NO ROCK OR SIMILAR MATERIAL GREATER THAN 6" IN DIAMETER WILL BE PLACED IN THE FILL UNLESS RECOMMENDATIONS FOR SUCH PLACEMENT HAVE BEEN SUBMITTED BY THE SOILS ENGINEER IN ADVANCE AND APPROVED BY THE BUILDING OFFICIAL.
29. DENSITY TESTS WILL BE MADE OF POINTS APPROXIMATELY 1 FOOT BELOW THE FILL SLOPE SURFACE ON THE BASIS OF ONE TEST FOR EACH 1,000 SQUARE FEET OF SLOPE SURFACE AND NOT LESS THAN ONE TEST FOR EACH 10 FOOT VERTICAL OF SLOPE HEIGHT.
30. ALL PADS AT ROUGH GRADING WILL HAVE A MINIMUM SLOPE OF 1% TOWARDS THE STREET OR DESIGNED DRAINAGE OUTLET.
31. CONTOURS SHOWN IN PARENTHESIS REPRESENT ORIGINAL GROUND.
32. THE UNDERSIGNED CIVIL ENGINEER CERTIFIES THIS GRADING WORK WILL BE OBSERVED AND INSPECTED IN ACCORDANCE WITH APPENDIX CHAPTER 33 OF THE CITY BUILDING CODE.

    DATE: 02/12/2025 R.C.E. NUMBER: C 60955

    ENGINEER'S NAME: ADRIAN ANDERSON SIGNATURE:
33. MONUMENTATION
    a. ALL EXISTING SURVEY MONUMENTS WITHIN THE CONSTRUCTION AREA SHALL BE LOCATED AND REFERENCED BY OR UNDER THE DIRECTION OF A LICENSED LAND SURVEYOR PRIOR TO THE APPROVAL OF GRADING PLANS. A CORNER RECORD OF THE EXISTING MONUMENTS AND REFERENCES SET TO PERPETUATE THE MONUMENTS SHALL BE FILED WITH THE COUNTY SURVEYOR PRIOR TO THE ISSUANCE OF A PERMIT TO START CONSTRUCTION.

    ALL MONUMENTS AND REFERENCE TIES DESTROYED BY CONSTRUCTION SHALL BE RESET IN THE SURFACE OF THE NEW CONSTRUCTION. ALL SECTION CORNERS, QUARTER SECTION CORNERS, AND CENTER OF SECTION CORNERS SHALL BE MONUMENTED IN ACCORDANCE WITH STANDARD PLAN PW-3. A NEW CORNER RECORD SHOWING THE AFTER CONSTRUCTION MONUMENTS SHALL THEN BE FILED WITH THE COUNTY SURVEYOR PRIOR TO THE ACCEPTANCE OF IMPROVEMENTS.

    b. ALL NEW SURVEY MONUMENTS SHOWN AS TO BE SET ON A FINAL TRACT MAP OR PARCEL MAP SHALL BE SET PER THE RECORDED TRACT OR PARCEL MAP AND FIELD BOOK SURVEY TIE NOTES SHALL BE FILED WITH THE CITY ENGINEER PRIOR TO ACCEPTANCE OF THE STREET IMPROVEMENTS.

    c. I HEREBY CERTIFY THAT I HAVE IDENTIFIED ALL EXISTING SURVEY MONUMENTS WITHIN THE CONSTRUCTION AREA. ALL SAID MONUMENTS WHICH CURRENTLY EXIST IN THE FIELD ARE SHOWN ON THESE PLANS AND ARE DESCRIBED AS FOLLOWS:

    PLS TAG #5924 IN S CB 1FT E/O BCR @ SE COR AVE I & 5TH ST E 39.4FT S/O & 65.6FT E/O C/L INT.

    DATE: _____ L.S. NUMBER: PLS 9453

    SURVEYOR'S NAME: CHRISTOPHER RIEHLE SIGNATURE: _____
34. DUST CONTROL SHALL BE ACCOMPLISHED BY ONE OF THE FOLLOWING METHODS, UNLESS OTHERWISE SPECIFIED BY THE BUILDING OFFICIAL, UNTIL PERMANENT GROUND COVERING (BUILDING, ROADS, LANDSCAPING) IS PROVIDED. ON-SITE SPRINKLERS ARE REQUIRED FOR SITES OF 5 ACRES OR MORE AND TRUCK WATERING MAY BE USED FOR SITES LESS THAN 5 ACRES.
35. SEPARATE PLANS FOR TEMPORARY DRAINAGE AND EROSION CONTROL MEASURES ARE REQUIRED.
36. WHEN MATERIAL IS BEING IMPORTED FROM AN APPROVED CITY BORROW SITE, THE AFTER TOPOGRAPHICAL SURVEY OF THE EXCAVATED PORTION OF THE BASIN SHALL BE SUBMITTED ALONG WITH THE ROUGH GRADING CERTIFICATE(S).
37. HAULING PERMIT IS REQUIRED IF HAULING MORE THAN 100 CUBIC YARDS OF DIRT. STOCKPILE PERMIT IS REQUIRED IF STOCKPILING MORE THAN 100 CUBIC YARDS OF DIRT.
38. PERIMETER WALL SHALL BE APPLIED WITH GRAFFITI BARRIER FILM TO THE SATISFACTION OF THE SENIOR DIRECTOR - DEVELOPMENT SERVICES PRIOR TO ACCEPTANCE OF IMPROVEMENTS. THE CONTRACTOR IS RESPONSIBLE TO MAINTAIN AND KEEP THE PERIMETER WALL FREE OF GRAFFITI DURING CONSTRUCTION AND PRIOR TO ACCEPTANCE OF IMPROVEMENTS.
39. ALL REVISIONS TO GRADING PLANS, OR MATERIAL SUBSTITUTION REQUESTS, PROPOSED DURING CONSTRUCTION SHALL BE SUBMITTED IN WRITING TO THE CAPITAL ENGINEERING DIVISION AND SHALL FOLLOW THE PROCEDURES FOR APPROVAL OUTLINED IN THE MOST CURRENT CITY OF LANCASTER ENGINEERING DESIGN GUIDELINES.
40. WHEN IMPROVEMENT PLANS HAVE BEEN SUBMITTED TO THE CITY FOR CHECKING AND THE CHECKING PROCESS HAS BEEN INTERRUPTED FOR A PERIOD OF ONE YEAR OR MORE, THE PLANS SHALL BE DEEMED ABANDONED. APPROVED IMPROVEMENT PLANS SHALL BE DEEMED ABANDONED IF CONSTRUCTION HAS NOT COMMENCED WITHIN TWO YEARS OF THE LATEST APPROVAL DATE. IF CONSTRUCTION IS INTERRUPTED FOR A PERIOD OF ONE YEAR OR MORE, THE PLANS SHALL BE DEEMED ABANDONED. ABANDONED PLANS SHALL BE RE-SUBMITTED FOR REVIEW AND ALL FEES SHALL BE PAID IN ACCORDANCE WITH THE CITY'S ABANDONED PLANS POLICY PRIOR TO ANY PERMITS BEING ISSUED.
41. ALL WORK SHALL COMPLY WITH THE CITY OF LANCASTER HOLIDAY MORATORIUM POLICY. NO EXCAVATION OR WORK SHALL OCCUR WITHIN THE PUBLIC RIGHT-OF-WAY ON PRIMARY ARTERIALS, SECONDARY ARTERIALS, AND COLLECTOR STREETS BETWEEN NOVEMBER 15TH TO JANUARY 2ND, EXCEPT WORK PERTAINING TO PUBLIC SAFETY OR WITH THE WRITTEN PERMISSION OF THE CITY MANAGER. WORK COMMENCED PRIOR TO THE RESTRICTION PERIOD MUST BE IN SUCH A CONDITION THAT IT WILL BE RESURFACED PRIOR TO NOVEMBER 15TH.
42. ALL ACCESSIBILITY REQUIREMENTS TO BE REVIEWED/APPROVED BY BUILDING & SAFETY ON ARCHITECTURAL PLANS AND REQUIRE SEPARATE PERMITS.

THE FOLLOWING NOTES ARE TO BE INCLUDED ONLY ON NON-TRACT GRADING PLANS:

43. ALL OFF-SITE IMPROVEMENTS WITHIN PUBLIC RIGHT OF WAY WILL REQUIRE SEPARATE ENCROACHMENT PERMITS.
44. ALL ON-SITE WET UTILITIES (SEWER, WATER, STORM DRAIN) TO BE REVIEWED/APPROVED BY BUILDING & SAFETY DIVISION AND REQUIRE SEPARATE PERMITS.
45. ALL OTHER UTILITIES (GAS, ELECTRIC, CABLE, ETC.) TO BE REVIEWED/APPROVED BY UTILITY COMPANIES/BUILDING & SAFETY AND REQUIRE SEPARATE PERMITS.

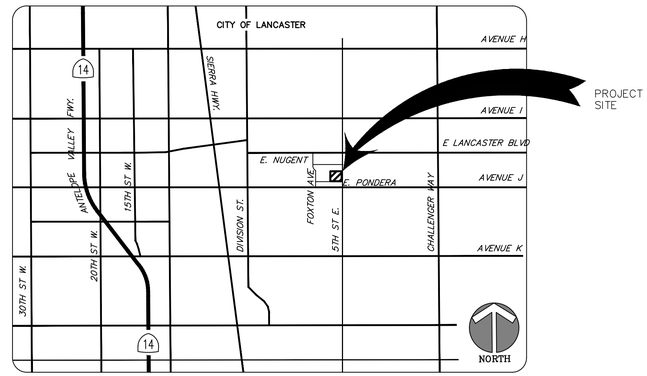

VICINITY MAP
N.T.S.

DATE OF FIELD SURVEY:

JANUARY 30-FEBRUARY 7, 2023

BASIS OF BEARINGS:

THE BASIS OF BEARINGS FOR THIS SURVEY IS BASED ON THE BEARING BETWEEN CGPS STATION "F0XG" AND "RSTP" BEING NORTH 15°39'27" EAST PER POSITIONS/COORDINATES AS PUBLISHED BY THE CALIFORNIA SPATIAL REFERENCE CENTER (PER CSRC_EPOCH2017.50_TABLE1_FINAL_V5.XLXS), BASED ON THE CALIFORNIA COORDINATE SYSTEM OF 1983 (CCS83), ZONE V, NAD83 (2017.50 EPOCH).

BENCHMARK:

LA COUNTY BENCHMARK #: TL5678
NAVD88 ELEVATION: 2354.769' (PER LA COUNTY PUBLIC WORKS, LANCASTER QUAD, 2012 ADJUSTMENT)
DESCRIPTION: PLS TAG #5924 IN S CB 1FT E/O BCR @ SE COR AVE I & 5TH ST E 39.4FT S/O & 65.6FT E/O C/L INT

ABBREVIATIONS

AC	ASPHALT CONCRETE
ASPH	ASPHALT
AVE	AVENUE
BMP	BEST MANAGEMENT PRACTICE
BLDG	BUILDING
BLVD	BOULEVARD
BW	BACK OF WALK
CF	CURB FACE
CPVC	CHLORINATED POLYVINYL CHLORIDE
CL	CENTER LINE
CLF	CHAIN LINK FENCE
CO	CLEANOUT
COR	CORNER
DG	DECOMPOSED GRANITE
E	EAST
EP	EDGE OF PAVEMENT
EOC	EDGE OF CONCRETE
EOH	ELECTRICAL OVERHEAD
EX	EXISTING
FDC	FIRE DEPARTMENT CONNECTION
FF	FINISHED FLOOR
FL	FLOWLINE
FNC	FENCE
FS	FINISHED SURFACE
GV	GAS VALVE
HP	HIGH POINT
HWY	HIGH WAY
ICV	IRRIGATION CONTROL
IE	INVERT ELEVATION
IW	IRRIGATION WATER VALVE
NTS	NOT TO SCALE
PB	PULL BOX
PL	PROPERTY LINE
PVC	POLYVINYL CHLORIDE
R/W	RIGHT OF WAY
SL	STREET LIGHT
ST	STREET
STD	STANDARD
STRP	STRIPING
SW	SIDEWALK
TC	TOP OF CURB
TW	TOP OF WALL
W	WEST/ WATER
WM	WATER METER
WV	WATER VALVE

GRADING SHEETS INDEX

C-100	TITLE SHEET
C-110	TOPOGRAPHIC SURVEY
C-200	DEMOLITION PLAN
C-300	GRADING PLAN INDEX
C-301	GRADING PLAN 1
C-302	GRADING PLAN 2
C-303	GRADING PLAN 3
C-304	GRADING PLAN 4
C-310	GRADING DETAILS
C-311	GRADING DETAILS
C-401	EROSION CONTROL PLAN
C-402	EROSION CONTROL PLAN
C-403	EROSION CONTROL PLAN
C-404	EROSION CONTROL PLAN
C-410	EROSION CONTROL DETAILS

UTILITY SHEETS INDEX

C-500	UTILITY TITLE SHEET
C-510	UTILITY PLAN
C-520	DETAILS

CHECKED BY: _____ DATE

GRADING CONSTRUCTION NOTES

10	CONSTRUCT COMMERCIAL DRIVEWAY APPROACHES PER SPPWC STD. 110-2 TYPE C ON SHT. C-310
11	CONSTRUCT CONCRETE CURB PER SPPWC STD. 120-3, TYPE A1 ON SHT. C-310. HEIGHT PER PLAN
12	CONSTRUCT TRUNCATED DOME PER DETAIL 13 ON SHT. G-011
13	CONSTRUCT CONCRETE MOW STRIP PER CITY OF LANCASTER STD. 203A-1 ON SHT. C-310
14	CONSTRUCT FULL DEPTH AC REPLACEMENT PER DETAIL ON SHT. C-310
15	CONSTRUCT CONCRETE SLOUGH WALL PER CITY OF LANCASTER STD. 215 ON SHT. C-310.
16	CONSTRUCT CONCRETE BLOCK WALL PER SPPWC STD. 621-3 ON SHT. C-310.
17	CONSTRUCT BIO-RETENTION BMP PER DETAIL ON SHT. C-311
18	INSTALL CONCRETE WHEEL STOP
19	INSTALL CONCRETE CATCH BASIN PER DETAIL ON SHT. C-311
20	CONSTRUCT CONCRETE SIDEWALK PER DETAIL ON SHT. C-310
21	CONSTRUCT CONCRETE RIP-RAP PER DETAIL ON SHT. C-310
22	CONSTRUCT CONCRETE CURB AND GUTTER PER SPPWC STD. 120-3, TYPE A2 ON SHT. C-310
23	CONSTRUCT MODIFIED CURB DRAIN PER DETAIL ON SHT. C-311
24	SAWCUT AND REMOVED EXISTING CURB FACE. FLUSH WITH EXISTING AC PAVEMENT.
25	ADJUST UTILITY ACCESS COVER TO GRADE. REPLACE WITH NEW

UTILITY CONSTRUCTION NOTES

60	INSTALL 6" CPVC SCH. 40 STORM DRAIN AND FITTINGS
61	INSTALL 4" CPVC SCH. 40 STORM DRAIN AND FITTINGS
62	INSTALL ANGULAR DOWNSPOUT BOOT WITH CLEANOUT PER DETAIL ON SHT. C-520
63	INSTALL STORM DRAIN CLEANOUT PER SPPWC STD. 204-3 ON SHT. C-520
64	INSTALL 6" ATRIUM GRATE PER DETAIL ON SHT. C-520
65	INSTALL 4" ATRIUM GRATE PER DETAIL ON SHT. C-520
66	CONNECT TO EXISTING STORM DRAIN PIPE
70	REMOVE AND DISPOSE OF EXISTING CATCH BASIN
71	REMOVE AND DISPOSE OF EXISTING STORM DRAIN PIPE
80	INSTALL 2" PVC SCH. 40 WATER LINE AND FITTINGS
81	INSTALL 3" PVC SCH. 40 WATER LINE AND FITTINGS
82	CONNECT TO EXISTING WATER LINE
83	INSTALL 2" PVC SCH. 40 IRRIGATION WATER LINE AND FITTINGS
84	INSTALL 4" PVC SCH. 40 IRRIGATION WATER LINE AND FITTINGS
85	INSTALL 4" PVC SCH. 40 WATER LINE AND FITTINGS
86	INSTALL CONCRETE THRUST BLOCK PER LA COUNTY STD. W-21 ON SHT. C-520
87	TRENCH AND BACKFILL PER LA COUNTY STD. W-21 ON SHT. C-520
88	INSTALL 3/4" PVC SCH. 40 WATER LINE AND FITTINGS
89	REMOVE AND CAP EXISTING WATER LINE

ARCH/ENG STAMP

REGISTERED PROFESSIONAL ENGINEER
ADRIAN T. ANDERSON
C 60955
Exp. 12/31/26
CIVIL
STATE OF CALIFORNIA

811 Know what's below. Call 811 before you dig.

PLANS PREPARED FOR THE CITY OF LANCASTER BY
IDS
IDS GROUP
1 PETERS CANYON ROAD, SUITE 130 IRVINE, CA 92606
TEL: 949-387-8500, FAX: 949-387-0800
IDS Project #: 22X099.01

REVISIONS

REVISED BY 3 BULLETIN #1 DATE 10/25/24	REVISED BY 4 BULLETIN #1 DATE 02/14/25	COMPOSITE SET 9/24/25	REVISED BY DATE
APPROVED DATE	APPROVED DATE		APPROVED DATE

CITY OF LANCASTER
SAMARITAN'S PURSE PARK RENOVATION
TITLE SHEET
GENERAL NOTES; VICINITY MAP
CONSTRUCTION NOTES
SHEETS INDEX

PWCP NO. 24-008 | C-100 | SHEET 1 OF 15 SHEETS

S:\PROJECTS\2022\SHARED\22X099.01 LANC – EL DORADO PARK\05 CAD\02 CIVIL\CD\22X099.01-C100-TITLE PLOT DATE: 2/14/2025 2:33:22 PM USER: GILL.IRADUKUNDA

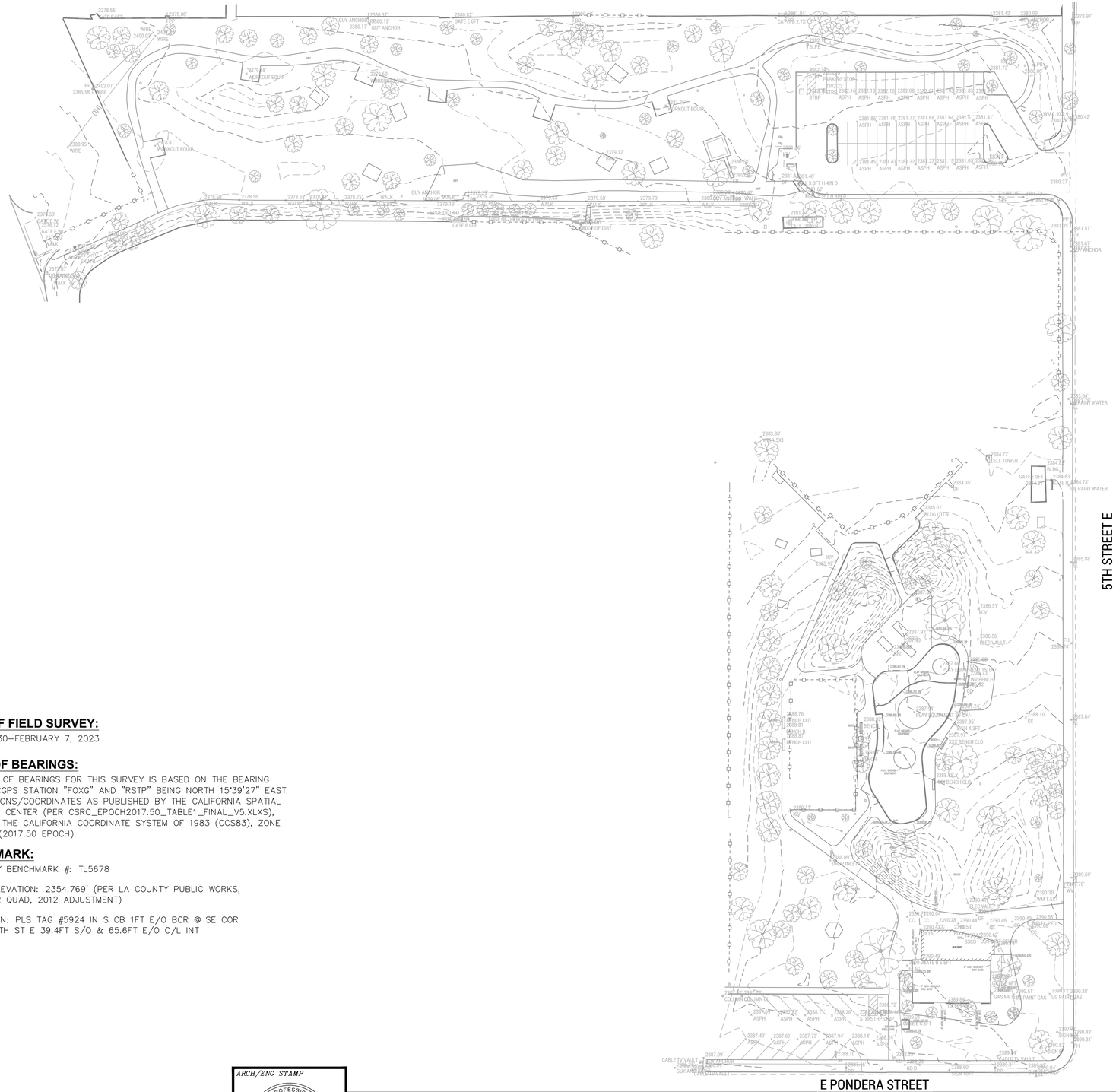

DATE OF FIELD SURVEY:

JANUARY 30–FEBRUARY 7, 2023

BASIS OF BEARINGS:

THE BASIS OF BEARINGS FOR THIS SURVEY IS BASED ON THE BEARING BETWEEN CGPS STATION "FOXG" AND "RSTP" BEING NORTH 15°39'27" EAST PER POSITIONS/COORDINATES AS PUBLISHED BY THE CALIFORNIA SPATIAL REFERENCE CENTER (PER CSRC_EPOCH2017.50_TABLE1_FINAL_V5.XLXS), BASED ON THE CALIFORNIA COORDINATE SYSTEM OF 1983 (CCS83), ZONE V, NAD83 (2017.50 EPOCH).

BENCHMARK:

LA COUNTY BENCHMARK #: TL5678

NAVD88 ELEVATION: 2354.769' (PER LA COUNTY PUBLIC WORKS, LANCASTER QUAD, 2012 ADJUSTMENT)

DESCRIPTION: PLS TAG #5924 IN S CB 1FT E/O BCR @ SE COR AVE I & 5TH ST E 39.4FT S/O & 65.6FT E/O C/L INT

50 SCALE 0 50 150

ARCH/ENG STAMP

REGISTERED PROFESSIONAL ENGINEER FORANT. ANDERSON C 60955 Exp. 12/31/26 CIVIL STATE OF CALIFORNIA

811 Know what's below. Call 811 before you dig.

PLANS PREPARED FOR THE CITY OF LANCASTER BY

IDS GROUP

1 PETERS CANYON ROAD, SUITE 130 IRVINE, CA 92606
TEL: 949-387-8500, FAX: 949-387-0800
IDS Project #: 22X099.01

REVISIONS

REVISED BY 3 BULLETIN #1 DATE 10/25/24	REVISED BY 4 BULLETIN #1 DATE 02/14/25	COMPOSITE SET 9/24/25
APPROVED ___ DATE	APPROVED ___ DATE	REVISED BY ___ DATE
		APPROVED ___ DATE

CHECKED BY:

DATE

CITY OF LANCASTER

SAMARITAN'S PURSE PARK RENOVATION

TOPOGRAPHIC SURVEY

PWCP NO. 24–008 | C–110 | SHEET 2 OF 15 SHEETS

S:\PROJECTS\2022\SHARED\22X099.01 LANC – EL DORADO PARK\05 CAD\02 CIVIL\CD\22X099.01–C110–TOPO PLOT DATE: 2/14/2025 2:33:38 PM USER: GILL.IRADUKUNDA

CHECKED BY:

DATE

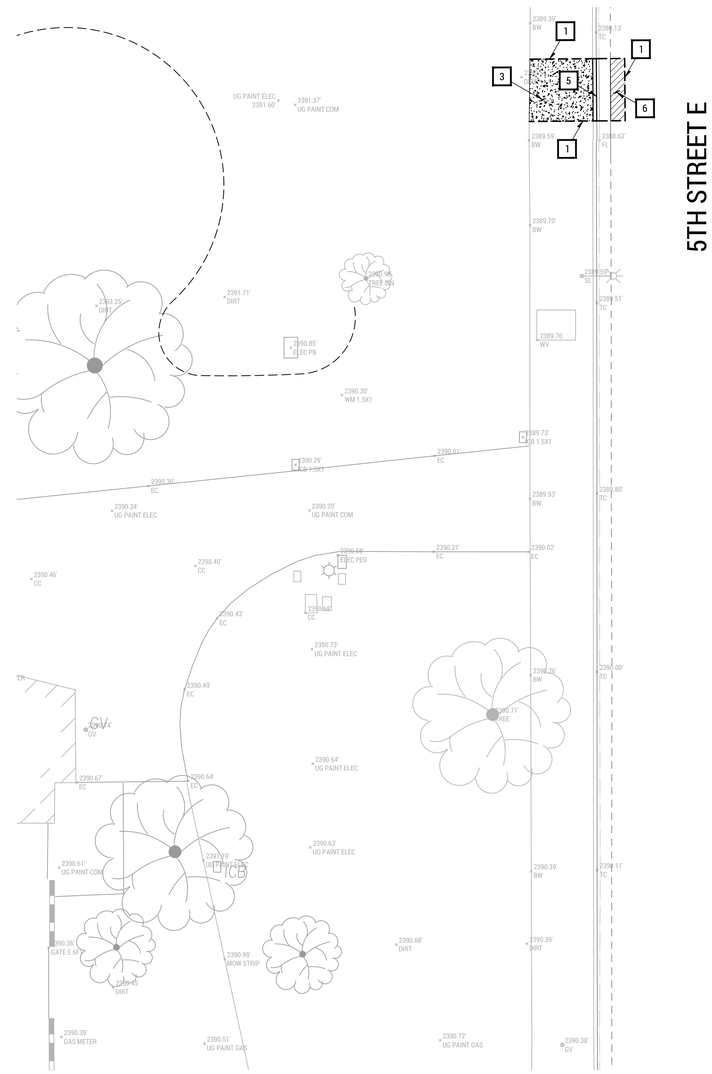

DEMOLITION NOTES

1. SAWCUT EXISTING PAVEMENT OR CURB
2. REMOVE EXISTING CURB
3. REMOVE EXISTING CONCRETE WALK
4. REMOVE EXISTING CONCRETE ACCESS RAMP
5. REMOVE EXISTING CONCRETE CURB & GUTTER
6. REMOVE EXISTING ASPHALT PAVEMENT AND BASE
7. REMOVE EXISTING CONCRETE WHEEL STOP
8. REMOVE EXISTING SIGN, POST, & FOOTING

10 SCALE 0 10 20

ARCH/ENG STAMP

REGISTERED PROFESSIONAL ENGINEER ADRIAN T. ANDERSON C 60955 Exp. 12/31/26 CIVIL STATE OF CALIFORNIA

Know what's below. Call 811 before you dig.

PLANS PREPARED FOR THE CITY OF LANCASTER BY

IDS GROUP

1 PETERS CANYON ROAD, SUITE 130 IRVINE, CA 92606
TEL: 949-387-8500. FAX: 949-387-0800
IDS Project #: 22X099.01

REVISIONS

REVISED BY 3 BULLETIN #1 DATE 10/25/24
APPROVED DATE

REVISED BY 4 BULLETIN #1 DATE 02/14/25
APPROVED DATE

COMPOSITE SET 9/24/25
REVISED BY DATE
APPROVED DATE

CITY OF LANCASTER

SAMARITAN'S PURSE PARK RENOVATION

DEMOLITION PLAN

PWCP NO. 24-008 | C-200 | SHEET 3 OF 15 SHEETS

S:\PROJECTS\2022\SHARED\22X099.01 LANC – EL DORADO PARK\05 CAD\02 CIVIL\CD\22X099.01-C200-DEMO PLOT DATE: 2/14/2025 2:33:53 PM USER: GILL.IRADUKUNDA

CHECKED BY:

DATE

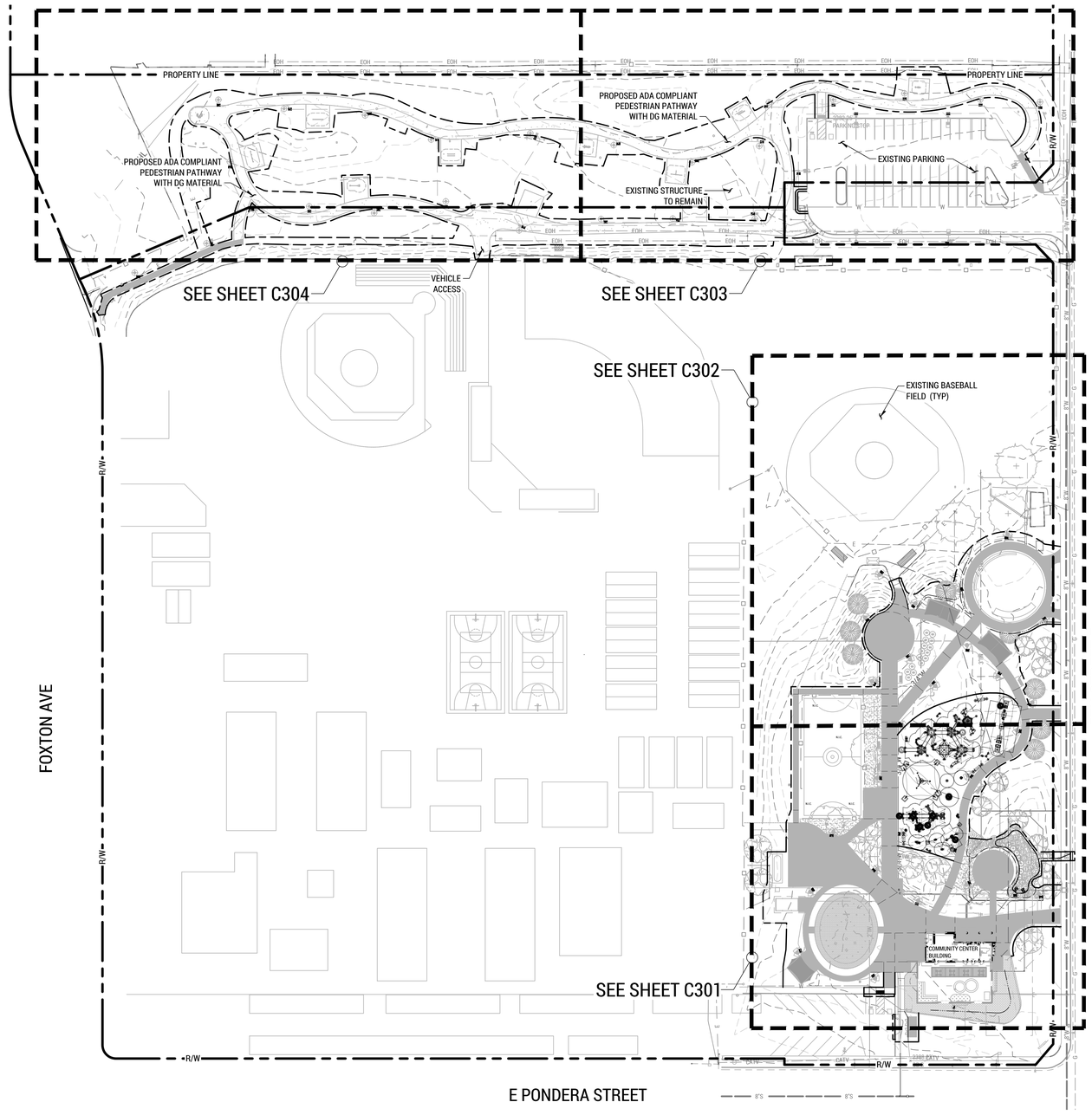

60 SCALE 0 60 120

ARCH/ENG STAMP

REGISTERED PROFESSIONAL ENGINEER ADRIAN T. ANDERSON C 60955 Exp. 12/31/26 CIVIL STATE OF CALIFORNIA

Know what's below. Call 811 before you dig.

PLANS PREPARED FOR THE CITY OF LANCASTER BY

IDS GROUP

1 PETERS CANYON ROAD, SUITE 130 IRVINE, CA 92606
TEL: 949-387-8500, FAX: 949-387-0800
IDS Project #: 22X099.01

REVISIONS

REVISED BY 3 BULLETIN #1 DATE 10/25/24	REVISED BY 4 BULLETIN #1 DATE 02/14/25	COMPOSITE SET 9/24/25
APPROVED DATE	APPROVED DATE	REVISED BY DATE
		APPROVED DATE

CITY OF LANCASTER

SAMARITAN'S PURSE PARK RENOVATION

GRADING PLAN INDEX

PWCP NO. 24-008 | C-300 | SHEET 4 OF 15 SHEETS

S:\PROJECTS\2022\SHARED\22X099.01 LANC - EL DORADO PARK\05 CAD\02 CIVIL\CD\22X099.01-C300-GRAD PLOT DATE: 2/14/2025 2:35:11 PM USER: GILL.IRADUKUNDA

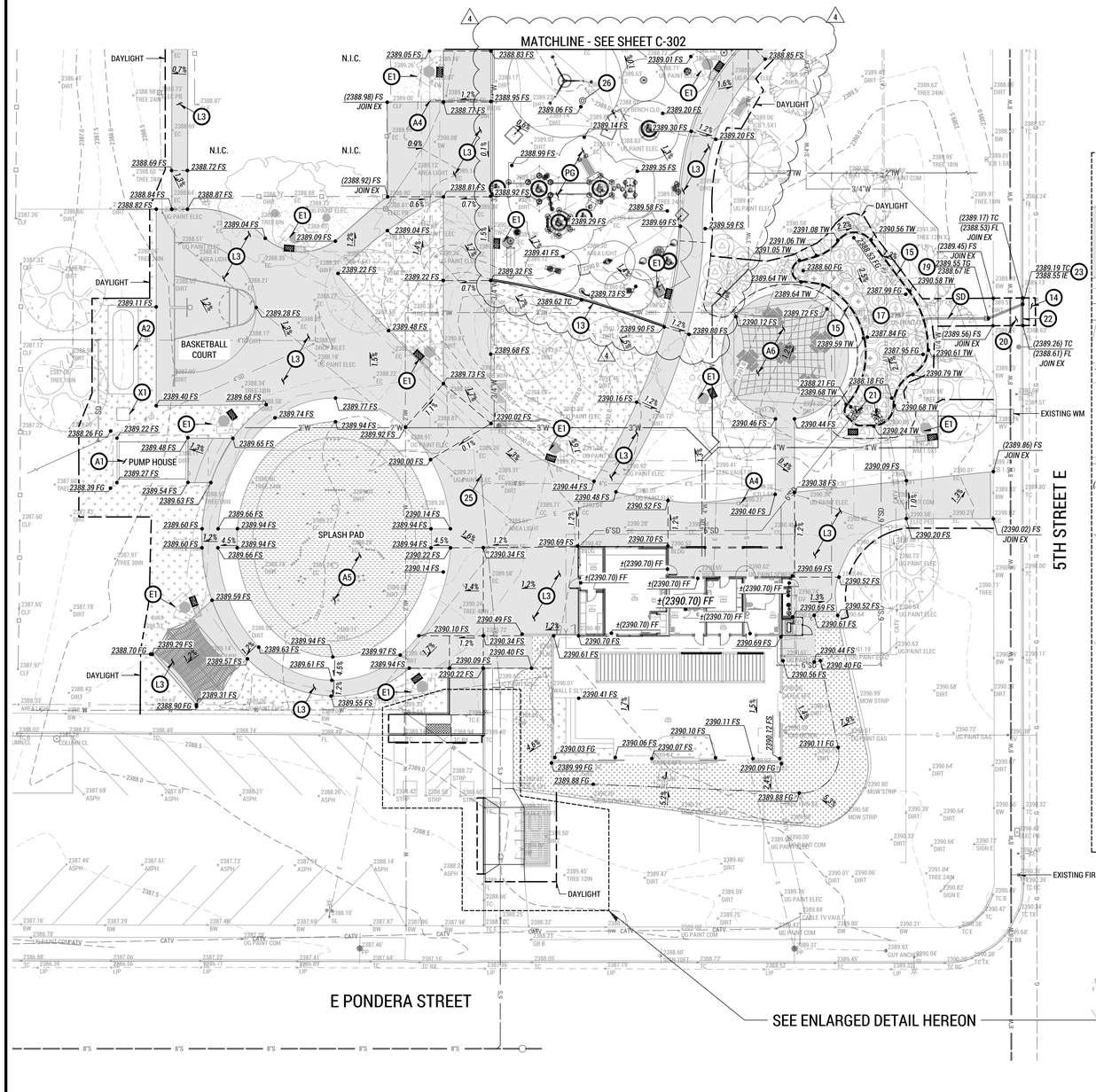

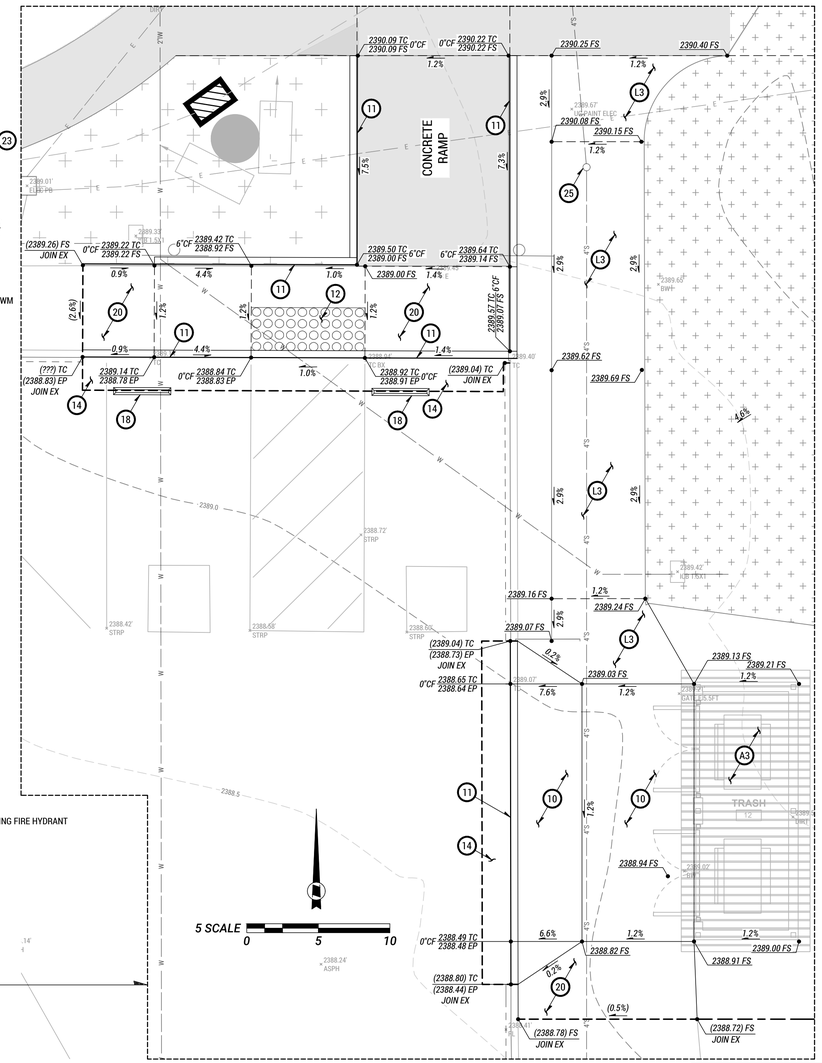

CHECKED BY:

DATE

GRADING CONSTRUCTION NOTES

10. CONSTRUCT COMMERCIAL DRIVEWAY APPROACHES PER SPPWC STD. 110-2 TYPE C ON SHT. C-310
11. CONSTRUCT CONCRETE CURB PER SPPWC STD. 120-3, TYPE A1 ON SHT. C-310, HEIGHT PER PLAN
12. CONSTRUCT TRUNCATED DOME PER DETAIL 13 ON SHT. G-011
13. CONSTRUCT CONCRETE MOW STRIP PER CITY OF LANCASTER STD. 203A-1 ON SHT. C-310
14. CONSTRUCT FULL DEPTH AC REPLACEMENT PER DETAIL ON SHT. C-310
15. CONSTRUCT CONCRETE SLOUGH WALL PER CITY OF LANCASTER STD. 215 ON SHT. C-310.
17. CONSTRUCT BIO-RETENTION BMP PER DETAIL ON SHT. C-311
18. INSTALL CONCRETE WHEEL STOP
19. INSTALL CONCRETE CATCH BASIN PER DETAIL ON SHT. C-311
20. CONSTRUCT CONCRETE SIDEWALK PER DETAIL ON SHT. C-310
21. CONSTRUCT CONCRETE RIP-RAP PER DETAIL ON SHT. C-310
22. CONSTRUCT CONCRETE CURB AND GUTTER PER SPPWC STD. 120-3, TYPE A2 ON SHT. C-310
23. CONSTRUCT MODIFIED CURB DRAIN PER DETAIL ON SHT. C-311
25. ADJUST UTILITY ACCESS COVER TO GRADE. REPLACE WITH NEW
26. CONSTRUCT DRAINAGE WELL PER DETAIL 20 ON SHT. C-311.

COORDINATION NOTES

- A1 PUMP HOUSE PER ARCHITECTURAL PLANS
- A2 UNDERGROUND TANK PER ARCHITECTURAL PLANS
- A3 TRASH ENCLOSURE PER ARCHITECTURAL PLANS
- A4 DRINKING FOUNTAIN PER ARCHITECTURAL PLANS
- A5 SPLASH PAD PER ARCHITECTURAL PLANS
- A6 PICNIC PLAZA WITH SHADE STRUCTURE PER ARCHITECTURAL PLANS
- E1 LIGHTING FIXTURE PER ELECTRICAL PLANS
- L3 CONCRETE WALK PER DETAIL ON SHT. C-310, FINISHED SURFACE PER LANDSCAPE PLANS.
- PG PLAYGROUND COMPONENTS PER GREAT WESTERN RECREATION PER DETAIL 21 ON SHT. C-311. (4)
- X1 DEBRIS TRAP WITH RAIN DIVERTER PER SEPARATE PLAN
- SD STORM DRAIN PER UTILITY PLAN, SEE SHT. C-510

ARCH/ENG STAMP

REGISTERED PROFESSIONAL ENGINEER DURANT ANDERSON C 60955 EXP. 12/31/26 CIVIL STATE OF CALIFORNIA

811 Know what's below. Call 811 before you dig.

PLANS PREPARED FOR THE CITY OF LANCASTER BY

IDS GROUP

1 PETERS CANYON ROAD, SUITE 130 IRVINE, CA 92606
TEL: 949-387-8500, FAX: 949-387-0800
IDS Project #: 22X099.01

REVISIONS

REVISED BY	BULLETIN	DATE	APPROVED	DATE
3	BULLETIN #1	10/25/24		
4	BULLETIN #1	02/14/25		
COMPOSITE SET		9/24/25		

CITY OF LANCASTER

SAMARITAN'S PURSE PARK RENOVATION

GRADING PLAN 1

PWCP NO. 24-008 | C-301 | SHEET 5 OF 15 SHEETS

S:\PROJECTS\2022\SHARED\22X099.01 LANC – EL DORADO PARK\05 CAD\02 CIVIL\CD\22X099.01-C301-GRAD PLOT DATE: 2/14/2025 2:36:40 PM USER: GILL.IRADUKUNDA

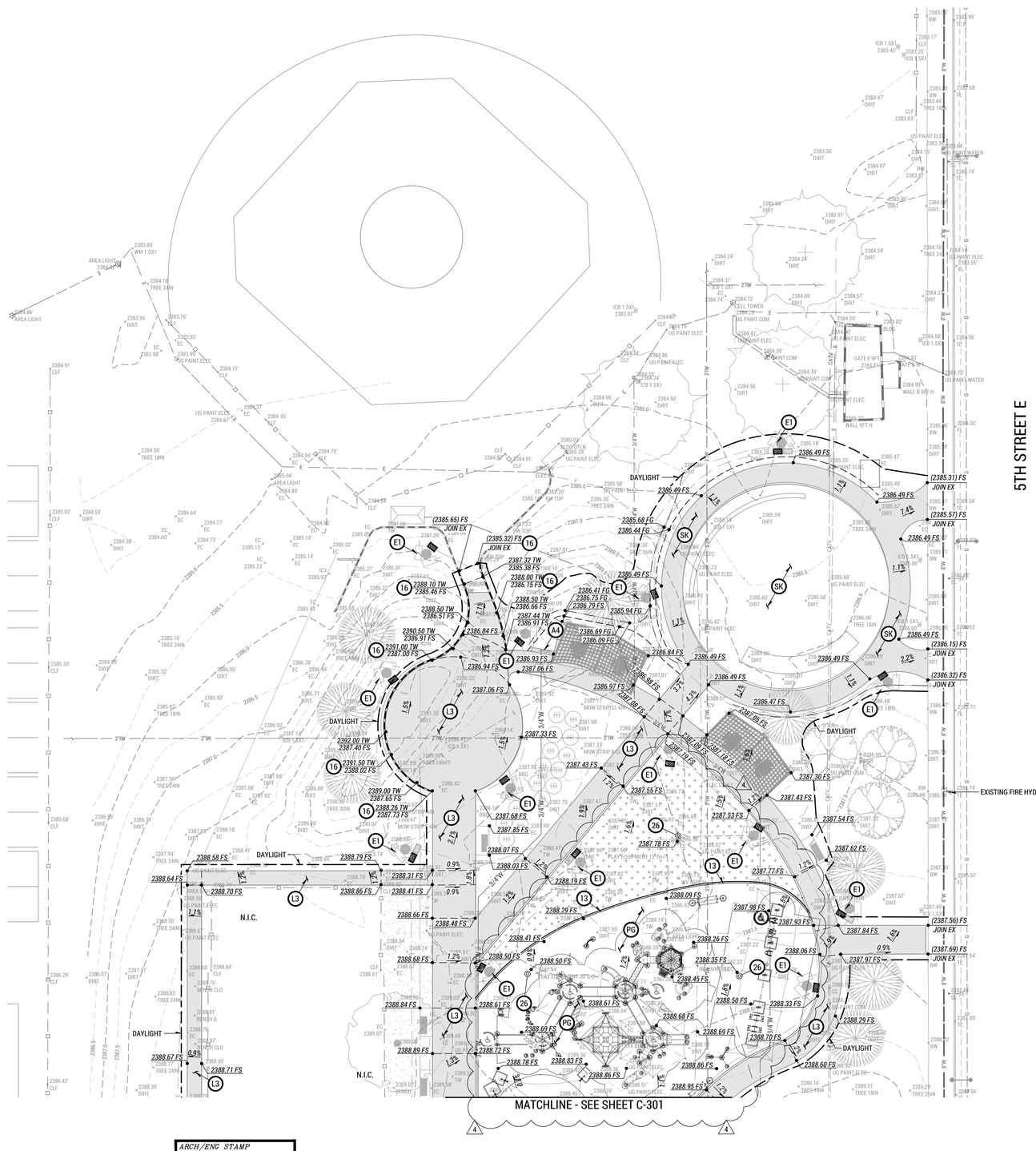

CHECKED BY:

DATE

GRADING CONSTRUCTION NOTES

- (13) CONSTRUCT CONCRETE MOW STRIP PER CITY OF LANCASTER STD. 203A-1 ON SHT. C-310
- (16) CONSTRUCT CONCRETE BLOCK WALL PER SPPWC STD. 621-3 ON SHT. C-310.
- (26) CONSTRUCT DRAINAGE WELL PER DETAIL 20 ON SHT. C-311.

COORDINATION NOTES

- (A4) DRINKING FOUNTAIN PER ARCHITECTURAL PLANS
- (E1) LIGHTING FIXTURE PER ELECTRICAL PLANS
- (L3) CONCRETE WALK PER DETAIL ON SHT. C-310, FINISHED SURFACE PER LANDSCAPE PLANS.
- (PG) PLAYGROUND COMPONENTS PER GREAT WESTERN RECREATION PER DETAIL 21 ON SHT. C-311.
- (SK) SKATE PARK LAYOUT PER SKATE PARK PLAN

20 SCALE 0 20 40

ARCH/ENG STAMP

REGISTERED PROFESSIONAL ENGINEER DURANT ANDERSON C 60955 EXP. 12/31/26 CIVIL STATE OF CALIFORNIA

811 Know what's below. Call 811 before you dig.

PLANS PREPARED FOR THE CITY OF LANCASTER BY

IDS GROUP

1 PETERS CANYON ROAD, SUITE 130 IRVINE, CA 92606
TEL: 949-387-8500, FAX: 949-387-0800
IDS Project #: 22X099.01

REVISIONS

REVISED BY (3) BULLETIN #1 DATE 10/25/24	REVISED BY (4) BULLETIN #1 DATE 02/14/25	COMPOSITE SET 9/24/25
APPROVED DATE	APPROVED DATE	REVISED BY DATE
		APPROVED DATE

CITY OF LANCASTER

SAMARITAN'S PURSE PARK RENOVATION

GRADING PLAN 2

PWCP NO. 24-008 | C-302 | SHEET 6 OF 15 SHEETS

S:\PROJECTS\2022\SHARED\22X099.01 LANC – EL DORADO PARK\05 CAD\02 CIVIL\CD\22X099.01-C301-GRAD PLOT DATE: 2/14/2025 2:37:05 PM USER: GILL.IRADUKUNDA

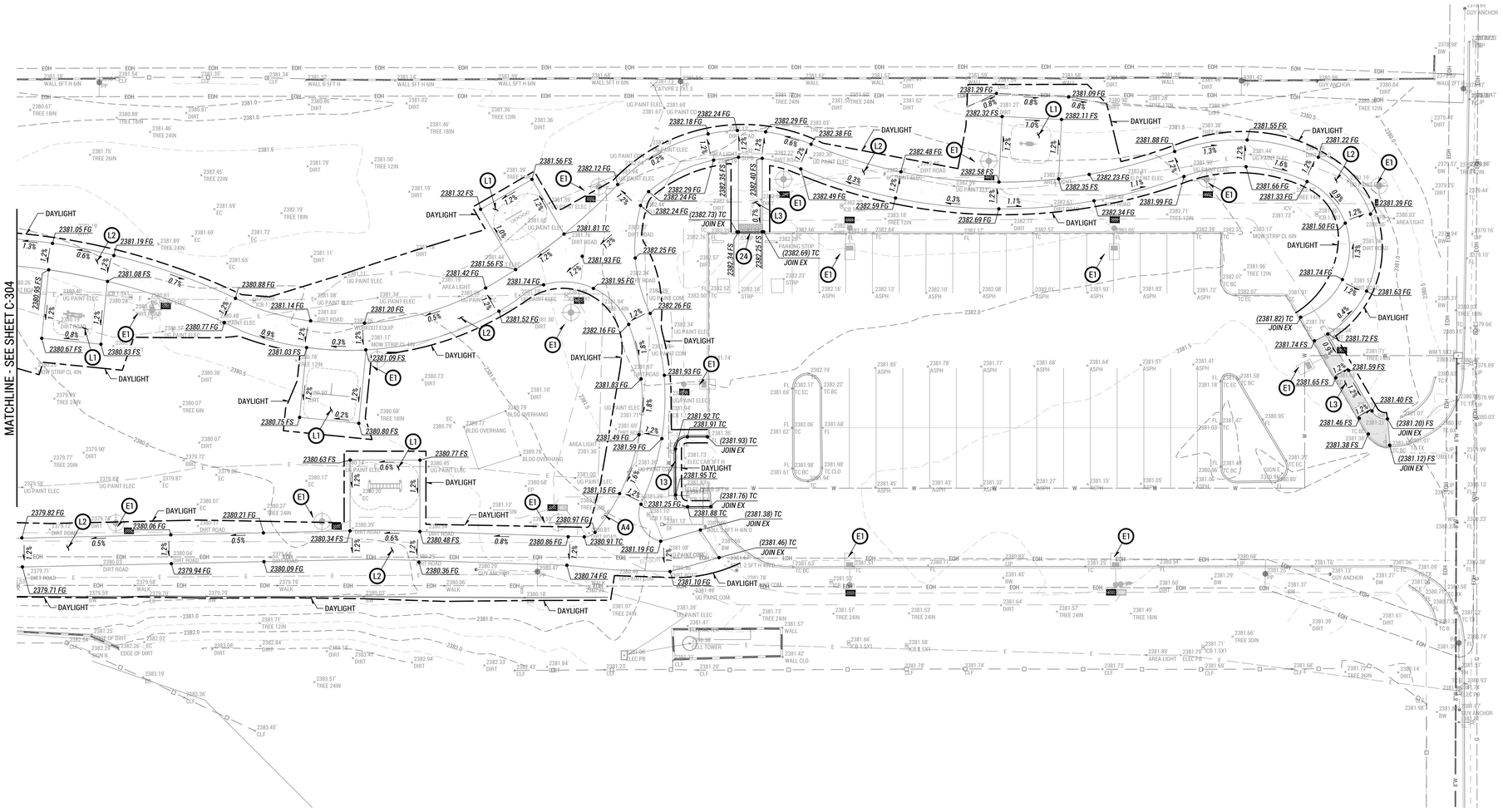

CHECKED BY:

DATE

GRADING CONSTRUCTION NOTES

13 CONSTRUCT CONCRETE MOW STRIP PER CITY OF LANCASTER STD. 203A-1 ON SHT. C-310

24 SAWCUT AND REMOVED EXISTING CURB FACE. FLUSH WITH EXISTING AC PAVEMENT.

COORDINATION NOTES

A4 DRINKING FOUNTAIN PER ARCHITECTURAL PLANS

E1 LIGHTING FIXTURE PER ELECTRICAL PLANS

L1 EXERCISE STATION PER LANDSCAPE PLANS

L2 DECOMPOSED GRANITE PATH PER LANDSCAPE PLANS

L3 CONCRETE WALK PER DETAIL ON SHT. C-310, FINISHED SURFACE PER LANDSCAPE PLANS.

20 SCALE 0 20 40

ARCH/ENG STAMP

REGISTERED PROFESSIONAL ENGINEER ADRIAN T. ANDERSON C 60955 EXP. 12/31/26 CIVIL STATE OF CALIFORNIA

811 Know what's below. Call 811 before you dig.

PLANS PREPARED FOR THE CITY OF LANCASTER BY

IDS GROUP

1 PETERS CANYON ROAD, SUITE 130 IRVINE, CA 92606
TEL: 949-387-8500, FAX: 949-387-0800
IDS Project #: 22X099.01

REVISIONS

REVISED BY 3 BULLETIN #1 DATE 10/25/24	REVISED BY 4 BULLETIN #1 DATE 02/14/25	COMPOSITE SET 9/24/25
APPROVED DATE	APPROVED DATE	REVISED BY DATE
		APPROVED DATE

CITY OF LANCASTER

SAMARITAN'S PURSE PARK RENOVATION

GRADING PLAN 3

PWCP NO. 24-008 | C-303 | SHEET 7 OF 15 SHEETS

S:\PROJECTS\2022\SHARED\22X099.01 LANC – EL DORADO PARK\05 CAD\02 CIVIL\CD\22X099.01-C301-GRAD PLOT DATE: 2/14/2025 2:37:22 PM USER: GILL.IRADUKUNDA

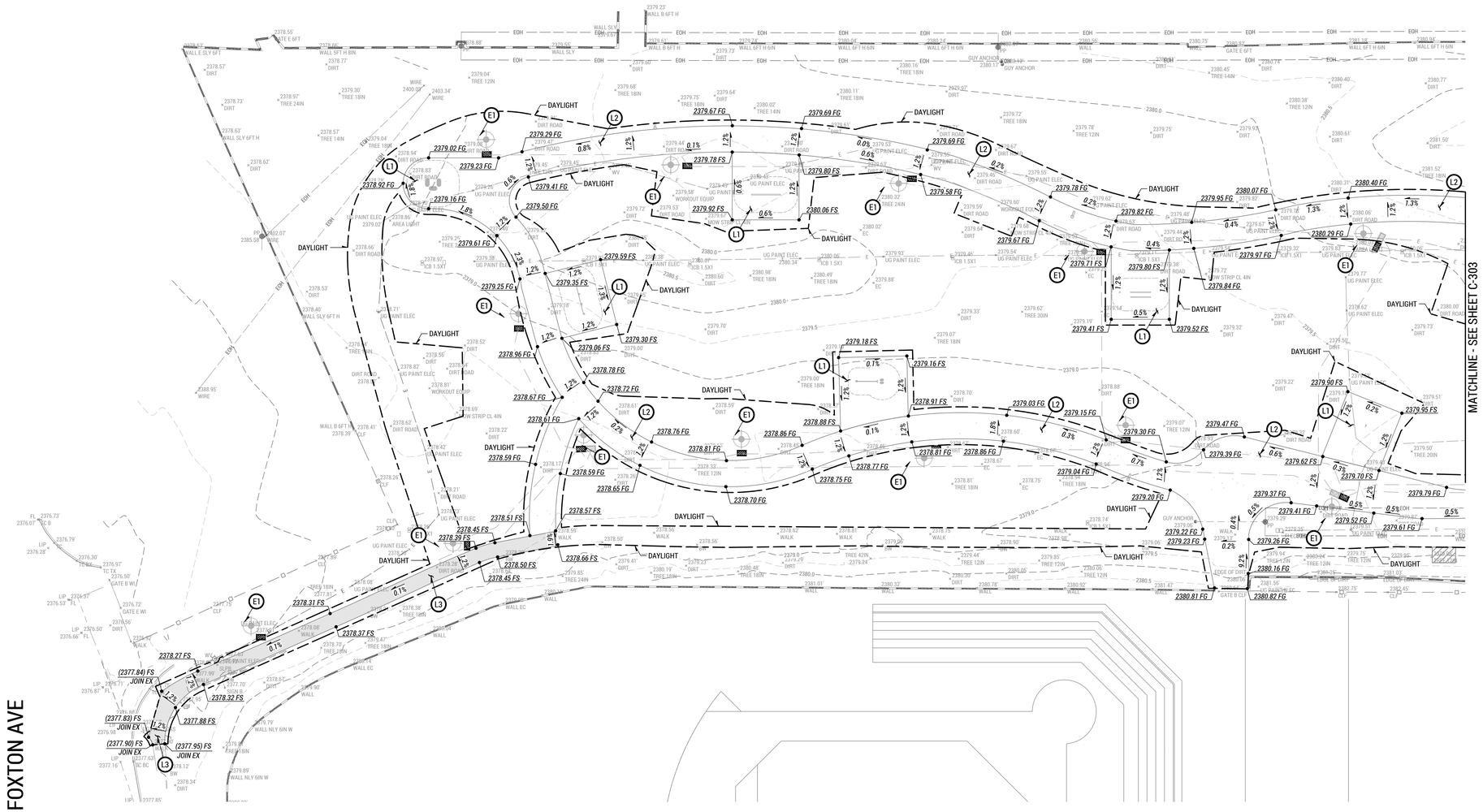

CHECKED BY:

DATE

COORDINATION NOTES

- (E1) LIGHTING FIXTURE PER ELECTRICAL PLANS
- (L1) EXERCISE STATION PER LANDSCAPE PLANS
- (L2) DECOMPOSED GRANITE PATH PER LANDSCAPE PLANS
- (L3) CONCRETE WALK PER DETAIL ON SHT. C-310, FINISHED SURFACE PER LANDSCAPE PLANS.

20 SCALE 0 20 40

ARCH/ENG STAMP

REGISTERED PROFESSIONAL ENGINEER AURANT ANDERSON C 60955 EXP 12/31/26 CIVIL STATE OF CALIFORNIA

811 Know what's below. Call 811 before you dig.

PLANS PREPARED FOR THE CITY OF LANCASTER BY

IDS GROUP

1 PETERS CANYON ROAD, SUITE 130 IRVINE, CA 92606
TEL: 949-387-8500, FAX: 949-387-0800
IDS Project #: 220099.01

REVISIONS

REVISED BY 3 BULLETIN #1 DATE 10/25/24	REVISED BY 4 BULLETIN #1 DATE 02/14/25	COMPOSITE SET 9/24/25
APPROVED DATE	APPROVED DATE	REVISED BY DATE
		APPROVED DATE

CITY OF LANCASTER

SAMARITAN'S PURSE PARK RENOVATION

GRADING PLAN 4

PWCP NO. 24-008 | C-304 | SHEET 8 OF 15 SHEETS

S:\PROJECTS\2022\SHARED\22X099.01 LANC – EL DORADO PARK\05 CAD\02 CIVIL\CD\22X099.01-C301-GRAD PLOT DATE: 2/14/2025 2:37:47 PM USER: GILL.IRADUKUNDA

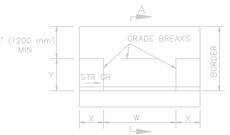

TYPE A

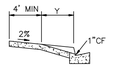

SECTION A–A

CURB FACE, inches	X, inches	Y, inches
6" (150) or less	3'–0" (900)	4'–0" (1200)
7" (175)	3'–6" (1050)	4'–9" (1425)
8" (200)	4'–0" (1200)	5'–8" (1700)
9" (225)	4'–6" (1350)	6'–6" (1950)
10" (250)	5'–0" (1500)	7'–3" (2175)
11" (275)	5'–6" (1650)	8'–0" (2400)
12" (300) or more	6'–0" (1800)	8'–9" (2625)

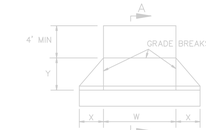

TYPE B

NOTES:

1. RESIDENTIAL DRIVEWAYS SHALL BE 4" THICK PCC.
2. COMMERCIAL DRIVEWAYS SHALL BE 6" THICK PCC.
3. WEAKENED PLANE JOINTS SHALL BE INSTALLED AT BOTH SIDES OF A DRIVEWAY AND AT 10' INTERVALS.
4. CURB FOR TYPE C DRIVEWAY SHALL BE INTEGRAL AND MATCH ADJACENT CONSTRUCTION.
5. REFER TO LOCAL DEVELOPMENT REGULATIONS FOR AMERICANS WITH DISABILITIES ACCESS REQUIREMENTS AND MAXIMUM PERMITTED DRIVEWAY WIDTHS.

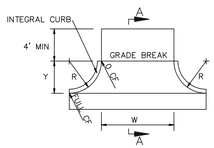

TYPE C

STANDARD PLANS FOR PUBLIC WORKS CONSTRUCTION

PROMULGATED BY THE PUBLIC WORKS STANDARDS INC. GREENBOOK COMMITTEE 1993 REV. 1996, 2009

DRIVEWAY APPROACHES

USE WITH STANDARD SPECIFICATIONS FOR PUBLIC WORKS CONSTRUCTION

STANDARD PLAN 110–2

SHEET 1 OF 1

NTS

DRIVEWAY APPROACHES 10

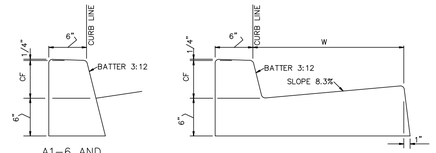

A1–6 AND A1–8

A2–6 AND A2–8

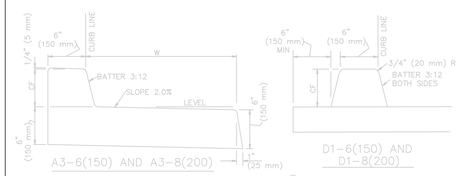

A3–6(150) AND A3–8(200)

D1–6(150) AND D1–8(200)

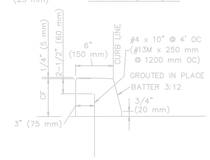

C1–6(150) AND C1–8(200)

NOTES:

1. THE LAST NUMBER IN THE DESIGNATION IS THE CURB FACE (CF) HEIGHT, INCHES IF SHOWN AS 'VAR' THE CURB FACE VARIES.
2. GUTTER WIDTH, W, IS 24" UNLESS OTHERWISE SPECIFIED.
3. TYPES A1, A2, A3 AND C1 SHALL BE CONSTRUCTED OF CONCRETE.
4. TYPE D1 CURB SHALL BE CONSTRUCTED OF ASPHALT CONCRETE.
5. TYPE C1 CURB SHALL BE ANCHORED WITH STEEL DOWELS AS SHOWN OR WITH AN EPOXY APPROVED BY THE ENGINEER.
6. ALL EXPOSED CORNERS ON CONCRETE CURBS AND GUTTERS SHALL BE ROUNDED WITH A 1/2" RADIUS.

STANDARD PLANS FOR PUBLIC WORKS CONSTRUCTION

PROMULGATED BY THE PUBLIC WORKS STANDARDS INC. GREENBOOK COMMITTEE 1993 REV. 1996, 2009, 2021

CURB AND GUTTER – BARRIER

USE WITH STANDARD SPECIFICATIONS FOR PUBLIC WORKS CONSTRUCTION

STANDARD PLAN 120–3

SHEET 1 OF 1

NTS

CONCRETE CURB 11, 22

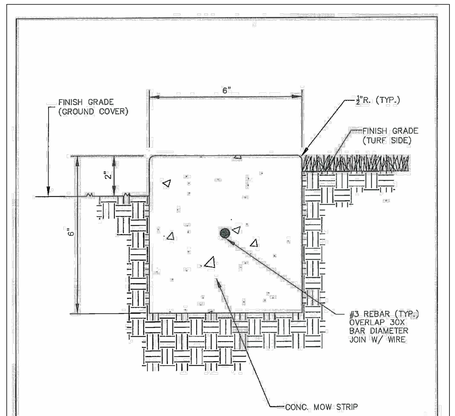

CITY OF LANCASTER

APPROVED BY:

RECOMMENDED BY:

CONCRETE MOW STRIP

STANDARD DETAIL 203A-I

NTS

CONCRETE MOW STRIP 13

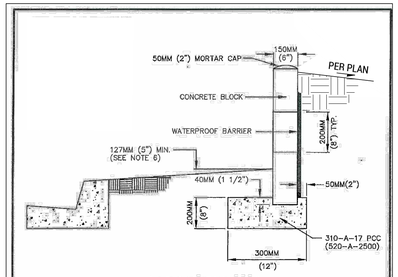

1-2 COURSE MINIMUM
3 COURSE MAXIMUM

NOTES:

- CONCRETE AND CONCRETE BLOCK SHALL BE PER SSPWC
- CONCRETE BLOCKS SHALL BE PLACED WHILE THE FOOTING IS STILL FRESH. ALL CELLS TO BE FILLED SOLID WITH GROUT AND RODDED SO GROUT IS MONOLITHIC WITH FRESH FOOTING.
- POUR FOOTING AGAINST UNDISTURBED NATURAL SOIL.
- NO LIVE LOAD SURCHARGE ALLOWED ON RETAINED SOIL.
- TOP OF FOOTING MAY BE PLACED PARALLEL TO PARKWAY GRADE IF STREET GRADE IS RELATIVELY FLAT AND UNIFORM. (MAX. 5%).
- DIMENSIONS SHOWN ON THIS PLAN FOR METRIC AND ENGLISH UNITS ARE NOT EXACTLY EQUAL VALUES. IF METRIC UNITS ARE USED, ALL VALUES USED FOR CONSTRUCTION SHALL BE METRIC VALUES. IF ENGLISH UNITS ARE USED, ALL VALUES USED FOR CONSTRUCTION SHALL BE ENGLISH VALUES.

CITY OF LANCASTER

APPROVED BY:

RECOMMENDED BY:

CONCRETE BLOCK SLOUGH WALL

STANDARD DETAIL 215

NTS

SLOUGH WALL 15

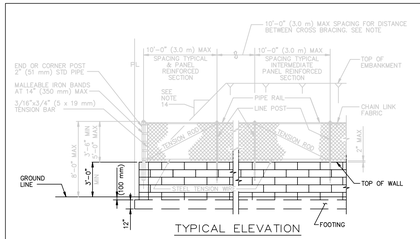

TYPICAL ELEVATION

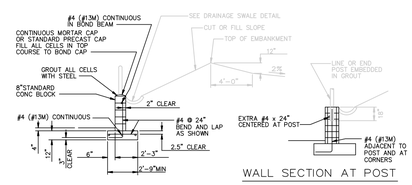

TYPICAL WALL SECTION

WALL SECTION AT POST

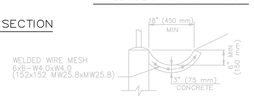

DRAINAGE SWALE DETAIL

NOTES:

1. THE BLOCK WALL SHALL BE CONSTRUCTED IN ACCORDANCE WITH SSPWC 303–4.1.
2. USE STANDARD 8" (200 mm) WIDE NORMAL WEIGHT CONCRETE BLOCK PER SSPWC 202–2.
3. USE CONCRETE BOND BEAM BLOCK WHERE HORIZONTAL STEEL IS CALLED FOR.
4. MORTAR, GROUT AND WATER SHALL CONFORM TO SSPWC 202–2.
5. REINFORCING STEEL SHALL BE GRADE 40 (GRADE 300) PER SSPWC 201–2.
6. ALL BLOCKS SHALL BE LAID UP IN MORTAR HEAD AND BED JOINTS FOR FULL THICKNESS OF FACE SHELLS. WEBS OF EACH COURSE SHALL CENTER ON WEBS OF COURSES BELOW. OMIT HEAD JOINT IN GRADE COURSE.
7. PLACE A MINIMUM 4" (100 mm) LAYER OF NO. 4 CONCRETE AGGREGATE BETWEEN THE SOIL BACKFILL AND THE OPEN HEAD JOINT.
8. ALL CELLS IN WHICH STEEL IS PLACED SHALL BE FILLED WITH GROUT.
9. CONCRETE SHALL BE 520–A–2500 (310–A–17) PER SSPWC 201–1.1.2.
10. POUR FOOTING AGAINST UNDISTURBED NATURAL SOIL OR SOIL THAT HAS BEEN COMPACTED TO 90% OPTIMUM DENSITY PER ASTM D1557–78.
11. CHAIN LINK FENCING SHALL BE CONSTRUCTED IN ACCORDANCE WITH SSPWC 304–3.
12. PROVIDE OPEN HEAD JOINTS AT INTERVALS NO GREATER THAN 48" (1.2 m). WHERE WALL IS LOCATED ADJACENT TO A SIDEWALK, PROVIDE 2" ø (50 mm ø) WEEP HOLES UNDER SIDEWALK.
13. WELDED WIRE MESH SHALL CONFORM TO SSPWC 201–2.2.3.

STANDARD PLANS FOR PUBLIC WORKS CONSTRUCTION

PROMULGATED BY THE PUBLIC WORKS STANDARDS INC. GREENBOOK COMMITTEE 1993 REV. 1996, 2006, 2021

REINFORCED CONCRETE BLOCK WALL AND CHAIN LINK FENCE COMBINATION

USE WITH STANDARD SPECIFICATIONS FOR PUBLIC WORKS CONSTRUCTION

STANDARD PLAN 621–3

SHEET 1 OF 2

STANDARD PLANS FOR PUBLIC WORKS CONSTRUCTION

REINFORCED CONCRETE BLOCK WALL AND CHAIN LINK FENCE COMBINATION

STANDARD PLAN 621–3

SHEET 2 OF 2

NTS

CONCRETE BLOCK WALL 16

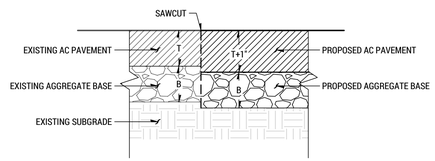

NOTES:
TRENCH BACKFILL AND DENSIFICATION SHALL CONFORM TO SSPWC 217-2 AND 306-12.
TRENCH RESURFACING SHALL BE PLACE PER SSPWC 306-13.

NTS

AC REPLACEMENT 14

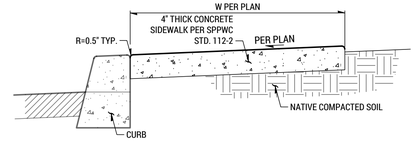

NOTES:

- CONCRETE SHALL BE CLASS 520-C-2500. CONFORMING TO SSPWC 201-1.1.2
- SAWCUT WEAKENED PLANE JOINT, MIN. 1/4" DEPTH OF PAVEMENT @ AT REGULAR INTERVALS NOT EXCEEDING 10'.
- ALL WORK SHALL BE CONSTRUCTED IN ACCORDANCE WITH THE LATEST STANDARD SPECIFICATIONS FOR PUBLIC WORKS CONSTRUCTION.

NTS

CONCRETE SIDEWALK 20, L3

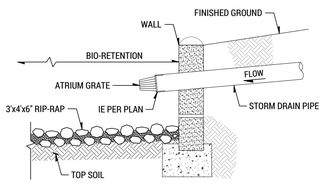

NOTES:

1. ROCKS FOR GROUTED RIP-RAP SHALL BE GOOD QUALITY BROKEN CONCRETE AND/OR RIVER RUN ROCK. THE SMALLEST DIMENSION SHALL EXCEED 2 INCHES AND THE LARGEST DIMENSION SHALL NOT EXCEED 6 INCHES. THE LARGEST DIMENSION SHALL NOT EXCEED 3 TIMES THE SMALLEST DIMENSION.
2. THERE SHALL BE A GROUT BED OF AT LEAST 2 INCHES BENEATH THE FIRST LAYER OF ROCK. ALL THE VOIDS BETWEEN ROCKS SHALL BE FILLED WITH GROUT. MAXIMUM SPACING BETWEEN ROCKS SHALL BE 2 INCHES.
3. SURFACE ROCKS SHALL BE IMBEDDED FROM 1/2 TO 2/3 OF THEIR MAXIMUM DIMENSION.

NTS

RIP-RAP 21

CHECKED BY:

DATE

ARCH/ENG STAMP

REGISTERED PROFESSIONAL ENGINEER ADRIAN T. ANDERSON C 60955 EXP. 12/31/26 CIVIL STATE OF CALIFORNIA

Know what's below. Call 811 before you dig.

PLANS PREPARED FOR THE CITY OF LANCASTER BY

IDS GROUP

1 PETERS CANYON ROAD, SUITE 130 IRVINE, CA 92606
TEL: 949-387-8500, FAX: 949-387-0800
IDS Project #: 220099.01

REVISIONS

REVISED BY 3 BULLETIN #1 DATE 10/25/24
APPROVED DATE

REVISED BY 4 BULLETIN #1 DATE 02/14/25
APPROVED DATE

COMPOSITE SET 9/24/25
REVISED BY DATE
APPROVED DATE

CITY OF LANCASTER

SAMARITAN'S PURSE PARK RENOVATION

DETAILS

PWCP NO. 24–008 | C–310 | SHEET 9 OF 15 SHEETS

S:\PROJECTS\2022\SHARED\22X099.01 LANC – EL DORADO PARK\05 CAD\02 CIVIL\CD\22X099.01–C310–DETL PLOT DATE: 2/14/2025 2:37:55 PM USER: GILL.IRADUKUNDA

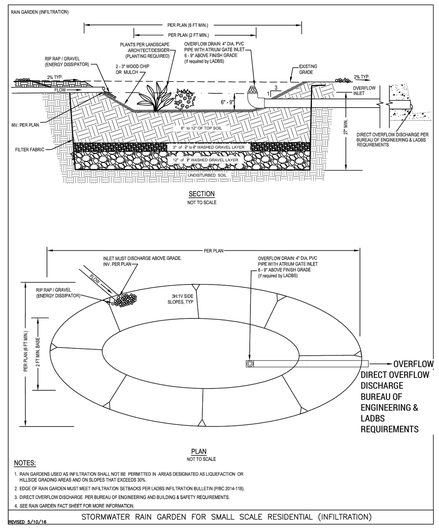

NOTES:

1. RAIN GARDENS USED AS INFILTRATION SHALL NOT BE PERMITTED IN AREAS DESIGNATED AS LIQUEFACTION OR HILLSIDE GRADING AREAS AND ON SLOPES THAT EXCEEDS 30%.
2. EDGE OF RAIN GARDEN MUST MEET INFILTRATION SETBACKS PER LADBS INFILTRATION BULLETIN (FBC 2014-118).
3. DIRECT OVERFLOW DISCHARGE PER BUREAU OF ENGINEERING AND BUILDING & SAFETY REQUIREMENTS.
4. SEE RAIN GARDEN FACT SHEET FOR MORE INFORMATION.

REVISED: 5/13/14 — STORMWATER RAIN GARDEN FOR SMALL SCALE RESIDENTIAL (INFILTRATION)

NTS

BIO-RETENTION 17

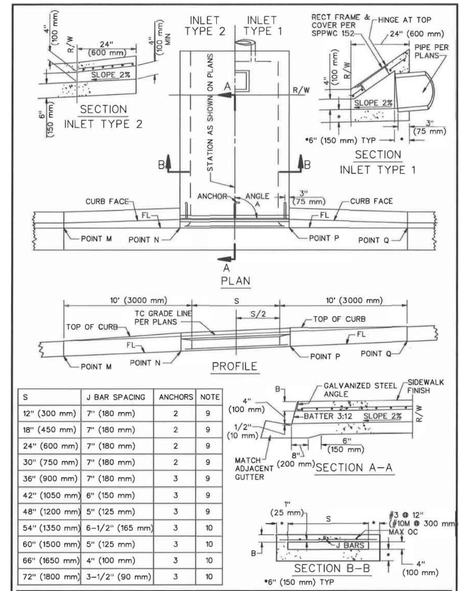

S	J BAR SPACING	ANCHORS	NOTE
12" (300 mm)	7" (180 mm)	2	9
18" (450 mm)	7" (180 mm)	2	9
24" (600 mm)	7" (180 mm)	2	9
30" (750 mm)	7" (180 mm)	2	9
36" (900 mm)	7" (180 mm)	3	9
42" (1050 mm)	6" (150 mm)	3	9
48" (1200 mm)	5" (125 mm)	3	9
54" (1350 mm)	6-1/2" (165 mm)	3	10
60" (1500 mm)	5" (125 mm)	3	10
66" (1650 mm)	4" (100 mm)	3	10
72" (1800 mm)	3-1/2" (90 mm)	3	10

STANDARD PLANS FOR PUBLIC WORKS CONSTRUCTION

PROMULGATED BY THE PUBLIC WORKS STANDARDS INC. GREENBOOK COMMITTEE 2003 REV. MAR. 2006, 2021

PARKWAY DRAIN

USE WITH STANDARD SPECIFICATIONS FOR PUBLIC WORKS CONSTRUCTION

STANDARD PLAN 151-3 SHEET 1 OF 2

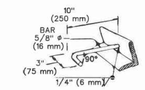

DETAIL OF ANCHOR

NOTES

1. FLOOR OF BOX SHALL BE TROWLED SMOOTH.
2. IF THE TOE OF SLOPE IS ALLOWED WITHIN THE R/W, INLET TYPE 1 BEGINS AT THE TOE RATHER THAN AT THE R/W LINE.
3. FOR OPEN DITCH (TYPE 2), THE 24" (600 mm) EXTENSION BEYOND THE R/W LINE IS NOT REQUIRED WHEN BACK OF WALK IS 24" (600 mm) OR MORE FROM THE R/W LINE; HOWEVER, THE PARKWAY DRAIN SHALL EXTEND TO THE R/W LINE IN ANY EVENT.
4. TOP OF INLET STRUCTURE (TYPE 1 & 2) SHALL BE FLUSH WITH ADJACENT SURFACE WHERE PRACTICAL.
5. A HEADED STEEL STUD 5/8" x 6-3/8" WITH A 1" HEAD (16 x 160 mm, 25 mm HEAD) ATTACHED BY A FULL PENETRATION BUTT WELD MAY BE USED AS AN ALTERNATE ANCHOR.
6. NORMAL CURB FACE AT POINT M AND Q. CURB FACE IS B + 5" (125 mm) AT POINT N AND P.
7. THE 3" (75 mm) LEG OF THE 5/8" (16 mm) DIA ANCHORS SHALL BE PARALLEL TO THE TOP OF SIDEWALK.
8. J BARS ARE #3 (#10M).
9. FOR S = 48" (1200 mm) AND LESS, B = 3" (75 mm). USE 2-1/2" x 2" x 3/8" (64 x 51 x 9.5 mm) GALVANIZED STEEL ANGLE.
10. FOR S = 54" (1350 mm) OR MORE, B = 4" (100 mm). USE 3-1/2" x 3" x 1/2" (89 x 76 x 12.7 mm) GALVANIZED STEEL ANGLE.
11. ANGLE A EQUALS 90° UNLESS OTHERWISE SPECIFIED.

STANDARD PLANS FOR PUBLIC WORKS CONSTRUCTION

PARKWAY DRAIN

STANDARD PLAN 151-3 SHEET 2 OF 2

NTS

MODIFIED CURB DRAIN 23

CHECKED BY:

DATE

GT IMPAX
Impact Absorbent Accessible Surfacing

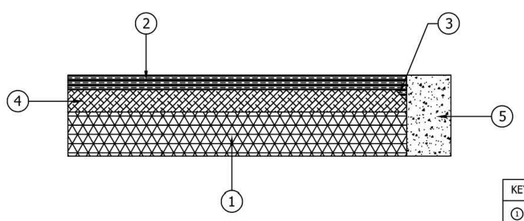

KEYNOTES

1. SUB-BASE OPTIONS PER ADA GUIDELINES: (1) COMPACTED AGGREGATE - 4" OF 3/4" MINUS IRREGULAR STONE WITH FINES COMPACTED TO 95% IN 2" WATERED LIFTS, ~~(2) CONCRETE - MINIMUM OF 3.47 SF A MINIMUM 3000 PSI, MUST CURE FOR 7 DAYS PRIOR TO CUSHION LAYER, MUST CURE FOR 28 DAYS IF WEAR COURSE IS TO BE APPLIED DIRECTLY TO CONCRETE SURFACE, (3) ASPHALT - MUST CURE A MINIMUM OF 14 DAYS, POWER WASHED~~
2. WEAR COURSE - 1/2" INCH MINIMUM THICKNESS
3. 1-1/2" 45 DEGREE EDGE BEVEL AGAINST PRIMED CONCRETE BORDER TO PREVENT SHRINKING
4. SBR CUSHION LAYER (DEPTH VARIES BY CRITICAL FALL HEIGHT REQUIREMENTS AND PRODUCT SOLD)
5. CONCRETE BORDER

GT IMPAX
ADDRESS: 150 PLAYCORE DRIVE SE
FORT PAYNE, ALABAMA 35967
PHONE: 800-235-8440
WEBSITE: WWW.GAMETIME.COM

DETAIL-5
FLUSH MOUNT TO WALL, CURB, OR SIDEWALK (EXISTING CONSTRUCTION)

DATE: 09-12-2016
REVISION DATE: 11-10-2016
SCALE: N.T.S.
DRAWN BY: ATL
SIGNED/APPROVED:

NTS

PLAYGROUND SECTION DETAIL BY GREAT WESTERN RECREATION-GTIMPAX 21

NOTES:
LOCATE DRYWELL 10 FEET FROM STRUCTURES, PROPERTY LINES, WATER TABLE AND SIGNIFICANT SLOPES.

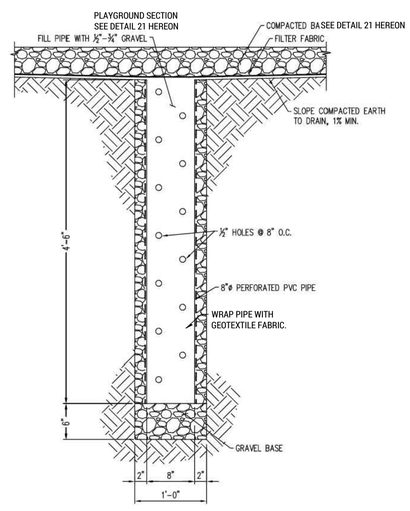

NTS

DRAINAGE WELL 20

1212 CAST IRON GRATE

PARKWAY ONLY 28 lbs.

1212 STEEL GRATES

PARKWAY 16 lbs.
TRAFFIC 18 lbs.

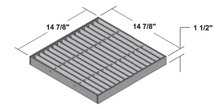

1212 STEEL COVER

PARKWAY 22 lbs.
TRAFFIC 25 lbs.

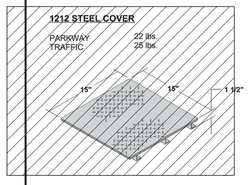

NOTES:
1. GRATES AND COVERS AVAILABLE PAINTED BLACK OR GALVANIZED
2. "ADA" GRATES AVAILABLE IN PARKWAY & TRAFFIC
3. "HEEL PROOF" GRATES AVAILABLE IN PARKWAY & TRAFFIC
4. A TOP SECTION WITH FRAME MUST BE USED IF BOLT DOWN REQUIRED

TOP SECTION	HT.	LBS	KNOCK-OUT
1212 T6	6"	170	NONE
1212 T12	12"	275	(4) 5" x 10"
1212 T18	18"	270	(4) 8" x 12"
1212 T24	24"	430	(4) 8" x 15"
1212 T28	28"	380	(4) 8" x 22"

EXTENSION SECTION	HT.	LBS	KNOCK-OUT
1212 E6	6"	170	NONE

LOWER SECTION	HT.	LBS	KNOCK-OUT
1212 L12	12"	275	(4) 5" x 10"
1212 L18	18"	270	(4) 8" x 12"
1212 L24	24"	430	(4) 8" x 15"
1212 L28	28"	380	(4) 8" x 22"

1212 TOP SECTION (*WITH GALVANIZED FRAME*)

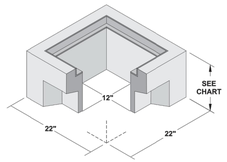

1212 LOWER SECTION (*NO FRAME*)

NOTE: USE 12", 18", 24", 28" LOWERS TO INCREASE DEPTH UP TO A MAXIMUM OF 72"

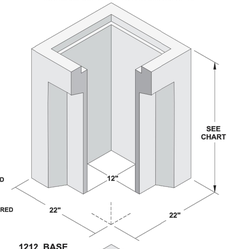

1212 BASE
WT. 165 lbs

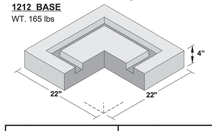

12" x 12" CATCH BASIN

JENSEN PRECAST EST. 1968

BROOKS 1212 CB

ORIG. DWG. DATE 04-20-95 | REV. DWG. DATE 02-14-20

7-02

NTS

CATCH BASIN 19

ARCH/ENG STAMP

REGISTERED PROFESSIONAL ENGINEER
JORDANT. ANDERSON
C 60955
Exp. 12/31/26
CIVIL
STATE OF CALIFORNIA

Know what's below. Call 811 before you dig.

PLANS PREPARED FOR THE CITY OF LANCASTER BY

IDS GROUP
1 PETERS CANYON ROAD, SUITE 130 IRVINE, CA 92606
TEL: 949-387-8500, FAX: 949-387-0800
IDS Project #: 22X099.01

REVISIONS

REVISED BY 3 BULLETIN #1 DATE 10/25/24
APPROVED DATE

REVISED BY 4 BULLETIN #1 DATE 02/14/25
APPROVED DATE

COMPOSITE SET 9/24/25
REVISED BY DATE
APPROVED DATE

CITY OF LANCASTER
SAMARITAN'S PURSE PARK RENOVATION
DETAILS

PWCP NO. 24-008 | C-311 | SHEET 10 OF 15 SHEETS

S:\PROJECTS\2022\SHARED\22X099.01 LANC - EL DORADO PARK\05 CAD\02 CIVIL\CD\22X099.01-C311-DETL PLOT DATE: 2/14/2025 2:38:11 PM USER: GILL.IRADUKUNDA

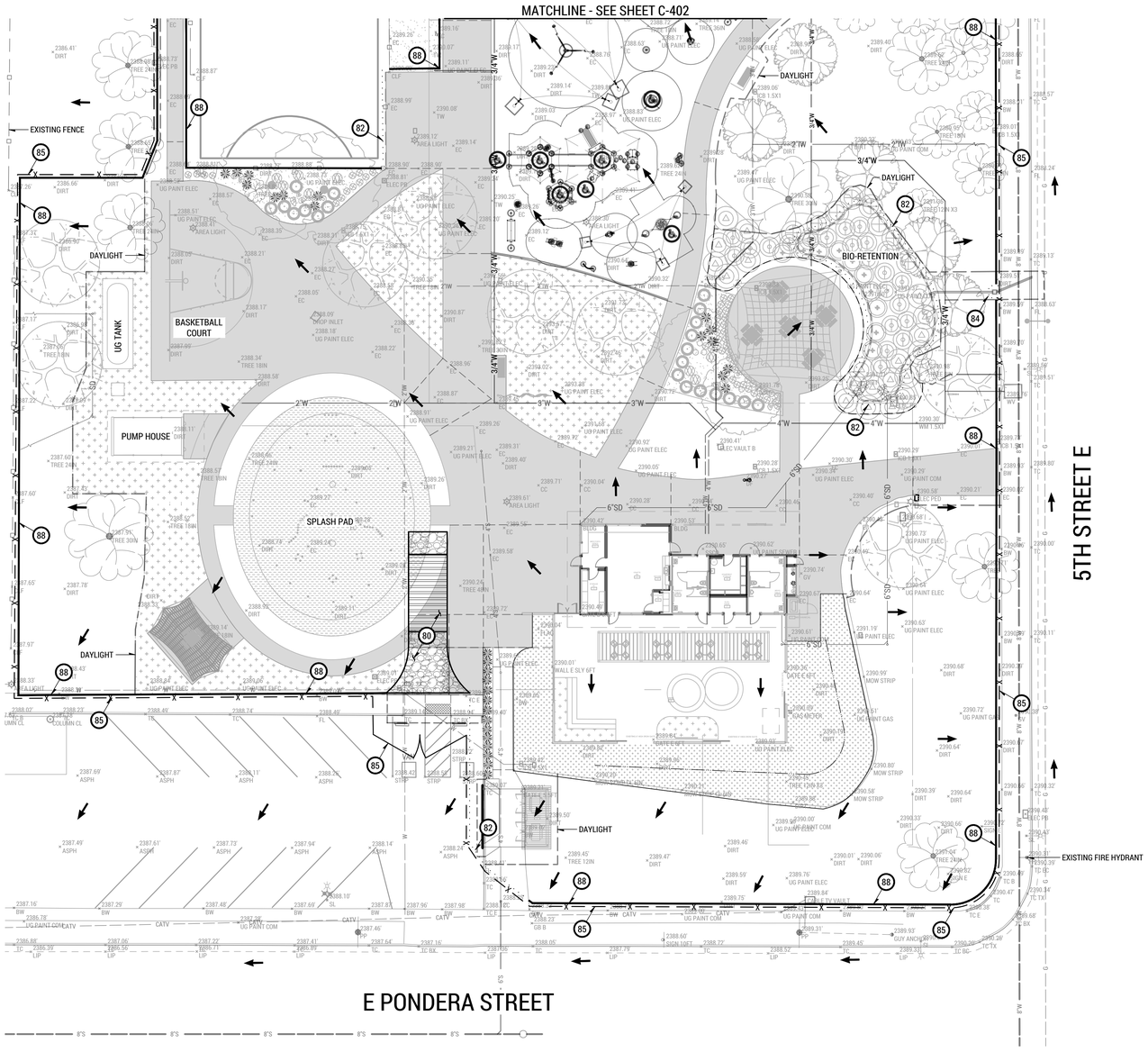

EROSION & SEDIMENT CONTROL NOTES

80 INSTALL STABILIZED CONSTRUCTION ENTRANCE/EXIT PER DETAIL ON SHT. C-410 AND CALIFORNIA STORMWATER CONSTRUCTION BMP HANDBOOK, CASQA TC-1

81 INSTALL MATERIAL STORAGE AREA PER DETAIL ON SHT. C-410 AND CALIFORNIA STORMWDATER CONSTRUCTION BMP HANDBOOK, CASQA WM-1

82 INSTALL GRAVEL BAG PER DETAIL ON SHT. C-410 AND CALIFORNIA STORMWDATER CONSTRUCTION BMP HANDBOOK, CASQA SE-6

83 INSTALL CONCRETE WASTE MANAGEMENT AREA PER DETAIL ON SHT. C-401 AND CALIFORNIA STORMWDATER CONSTRUCTION BMP HANDBOOK, CASQA WM-8

84 INSTALL STORM INLET PROTECTION PER DETAIL ON SHT. C-410 AND CALIFORNIA STORMWDATER CONSTRUCTION BMP HANDBOOK, CASQA SE-10

85 INSTALL 6' HIGH CHAIN LINK FENCE AND GATE WITH GREEN SCREEN

86 INSTALL SANITARY/SEPTIC WASTE MANAGEMENT PER CALIFORNIA STORMWDATER CONSTRUCTION BMP HANDBOOK, CASQA WM-9

87 STREET SWEEPING PER CALIFORNIA STORMWDATER CONSTRUCTION BMP HANDBOOK, CASQA SE-7

88 INSTALL FIBER ROLL PER DETAIL ON SHT. C-410

LEGEND

CHAIN LINK FENCE

FIBER ROLL

FLOW DIRECTION

GRAVEL BAG

CHECKED BY: _____ DATE

20 SCALE 0 20 40

ARCH/ENG STAMP

REGISTERED PROFESSIONAL ENGINEER BRENT T. ANDERSON C 60955 EXP. 12/31/26 CIVIL STATE OF CALIFORNIA

811 Know what's below. Call 811 before you dig.

PLANS PREPARED FOR THE CITY OF LANCASTER BY

IDS GROUP

1 PETERS CANYON ROAD, SUITE 130 IRVINE, CA 92606
TEL: 949-387-8500, FAX: 949-387-0800
IDS Project #: 22X099.01

REVISIONS

REVISED BY 3 BULLETIN #1 DATE 10/25/24
APPROVED _____ DATE

REVISED BY 4 BULLETIN #1 DATE 02/14/25
APPROVED _____ DATE

COMPOSITE SET 9/24/25
REVISED BY _____ DATE
APPROVED _____ DATE

CITY OF LANCASTER

SAMARITAN'S PURSE PARK RENOVATION

EROSION CONTROL PLAN

PWCP NO. 24-008 | C-401 | SHEET 11 OF 15 SHEETS

S:\PROJECTS\2022\SHARED\22X099.01 LANC – EL DORADO PARK\05 CAD\02 CIVIL\CD\22X099.01-C401-EROS PLOT DATE: 2/14/2025 2:38:53 PM USER: GILL.IRADUKUNDA

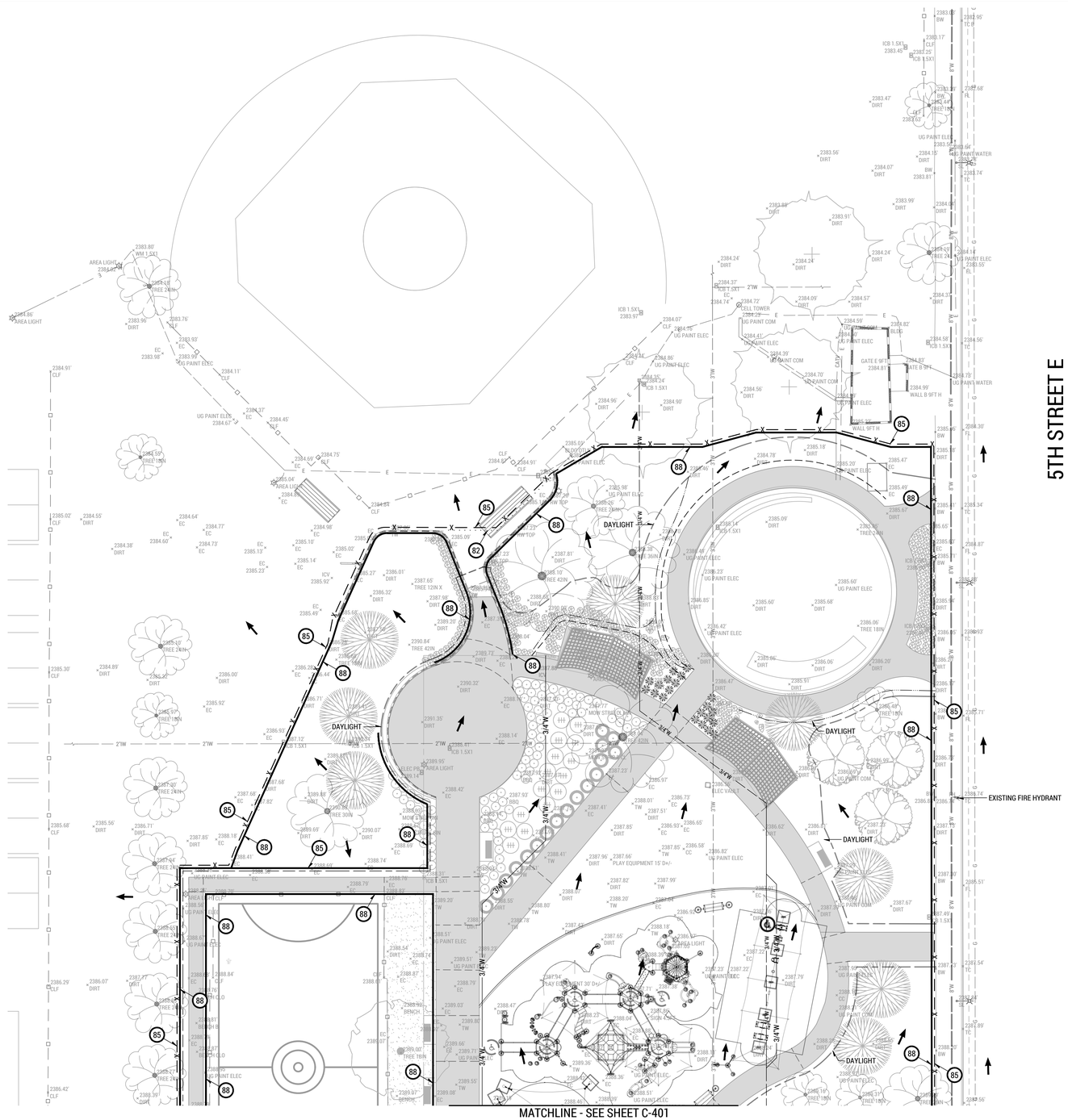

CHECKED BY:

DATE

EROSION & SEDIMENT CONTROL NOTES

81 INSTALL MATERIAL STORAGE AREA PER DETAIL ON SHT. C-410 AND CALIFORNIA STORMWDATER CONSTRUCTION BMP HANDBOOK, CASQA WM-1

82 INSTALL GRAVEL BAG PER DETAIL ON SHT. C-410 AND CALIFORNIA STORMWDATER CONSTRUCTION BMP HANDBOOK, CASQA SE-6

83 INSTALL CONCRETE WASTE MANAGEMENT AREA PER DETAIL ON SHT. C-401 AND CALIFORNIA STORMWDATER CONSTRUCTION BMP HANDBOOK, CASQA WM-8

84 INSTALL STORM INLET PROTECTION PER DETAIL ON SHT. C-410 AND CALIFORNIA STORMWDATER CONSTRUCTION BMP HANDBOOK, CASQA SE-10

85 INSTALL 6' HIGH CHAIN LINK FENCE AND GATE WITH GREEN SCREEN

86 INSTALL SANITARY/SEPTIC WASTE MANAGEMENT PER CALIFORNIA STORMWDATER CONSTRUCTION BMP HANDBOOK, CASQA WM-9

87 STREET SWEEPING PER CALIFORNIA STORMWDATER CONSTRUCTION BMP HANDBOOK, CASQA SE-7

88 INSTALL FIBER ROLL PER DETAIL ON SHT. C-410

LEGEND

CHAIN LINK FENCE

FIBER ROLL

FLOW DIRECTION

GRAVEL BAG

20 SCALE 0 20 40

ARCH/ENG STAMP

REGISTERED PROFESSIONAL ENGINEER ADRIAN T. ANDERSON C 60955 EXP. 12/31/26 CIVIL STATE OF CALIFORNIA

811 Know what's below. Call 811 before you dig.

PLANS PREPARED FOR THE CITY OF LANCASTER BY

IDS GROUP

1 PETERS CANYON ROAD, SUITE 130 IRVINE, CA 92606
TEL: 949-387-8500, FAX: 949-387-0800
IDS Project #: 22X099.01

REVISIONS

REVISED BY 3 BULLETIN #1 DATE 10/25/24	REVISED BY 4 BULLETIN #1 DATE 02/14/25	COMPOSITE SET 9/24/25
APPROVED DATE	APPROVED DATE	REVISED BY DATE
		APPROVED DATE

CITY OF LANCASTER

SAMARITAN'S PURSE PARK RENOVATION

EROSION CONTROL PLAN

PWCP NO. 24-008 | C-402 | SHEET 12 OF 15 SHEETS

CUMULATIVE SHEET X OF X SHEETS

S:\PROJECTS\2022\SHARED\22X099.01 LANC – EL DORADO PARK\05 CAD\02 CIVIL\CD\22X099.01-C401-EROS PLOT DATE: 2/14/2025 2:39:09 PM USER: GILL.IRADUKUNDA

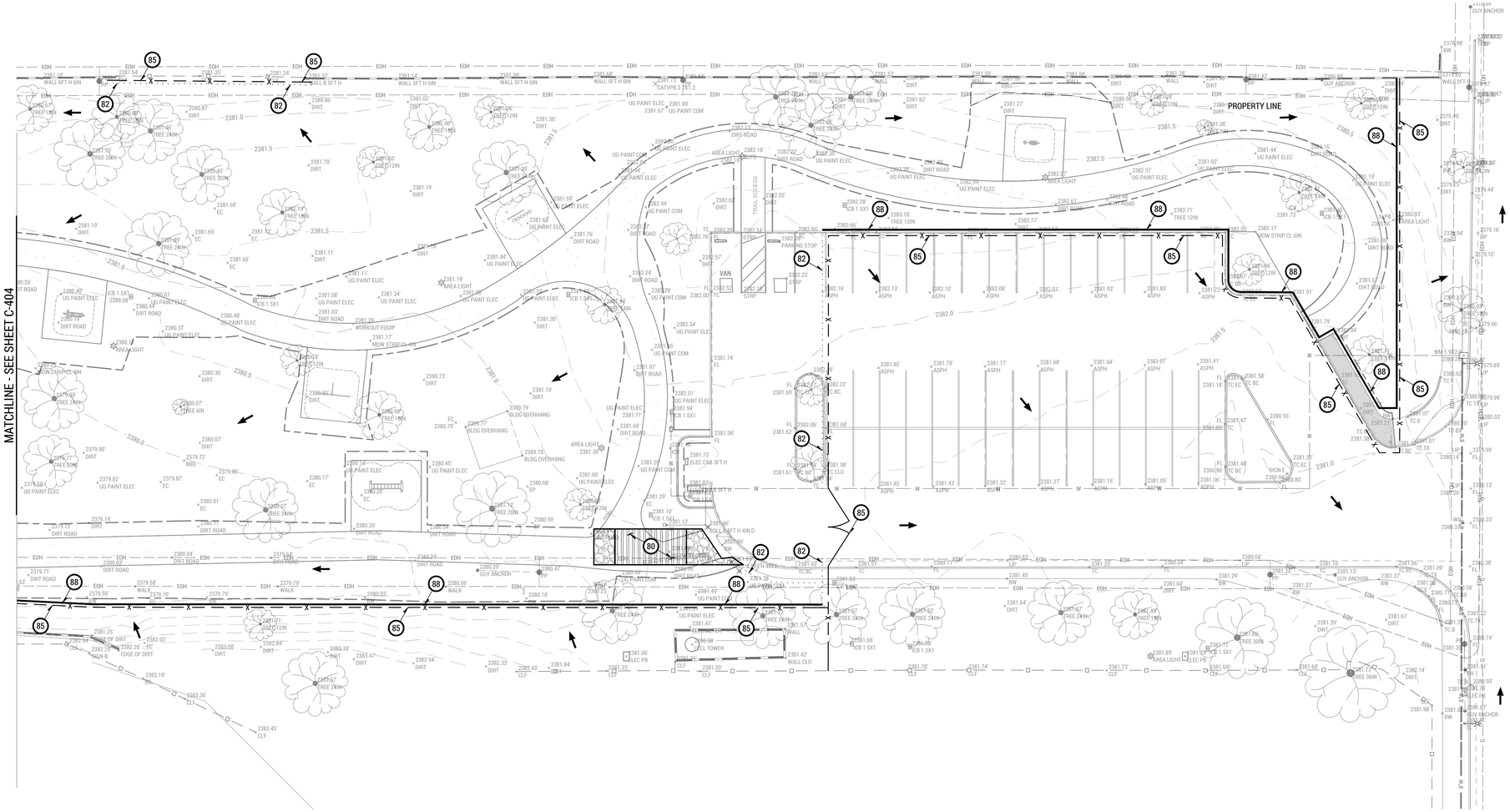

CHECKED BY:

DATE

EROSION & SEDIMENT CONTROL NOTES

80 INSTALL STABILIZED CONSTRUCTION ENTRANCE/EXIT PER DETAIL ON SHT. C-410 AND CALIFORNIA STORMWATER CONSTRUCTION BMP HANDBOOK, CASQA TC-1

81 INSTALL MATERIAL STORAGE AREA PER DETAIL ON SHT. C-410 AND CALIFORNIA STORMWDATER CONSTRUCTION BMP HANDBOOK, CASQA WM-1

82 INSTALL GRAVEL BAG PER DETAIL ON SHT. C-410 AND CALIFORNIA STORMWDATER CONSTRUCTION BMP HANDBOOK, CASQA SE-6

83 INSTALL CONCRETE WASTE MANAGEMENT AREA PER DETAIL ON SHT. C-401 AND CALIFORNIA STORMWDATER CONSTRUCTION BMP HANDBOOK, CASQA WM-8

84 INSTALL STORM INLET PROTECTION PER DETAIL ON SHT. C-410 AND CALIFORNIA STORMWDATER CONSTRUCTION BMP HANDBOOK, CASQA SE-10

85 INSTALL 6' HIGH CHAIN LINK FENCE AND GATE WITH GREEN SCREEN

86 INSTALL SANITARY/SEPTIC WASTE MANAGEMENT PER CALIFORNIA STORMWDATER CONSTRUCTION BMP HANDBOOK, CASQA WM-9

87 STREET SWEEPING PER CALIFORNIA STORMWDATER CONSTRUCTION BMP HANDBOOK, CASQA SE-7

88 INSTALL FIBER ROLL PER DETAIL ON SHT. C-410

LEGEND

— —x— — CHAIN LINK FENCE

FIBER ROLL

FLOW DIRECTION

GRAVEL BAG

20 SCALE 0 20 40

ARCH/ENG STAMP

REGISTERED PROFESSIONAL ENGINEER DURANT ANDERSON C 60955 Exp. 12/31/26 CIVIL STATE OF CALIFORNIA

811 Know what's below. Call 811 before you dig.

PLANS PREPARED FOR THE CITY OF LANCASTER BY

IDS GROUP

1 PETERS CANYON ROAD, SUITE 130 IRVINE, CA 92606
TEL: 949-387-8500, FAX: 949-387-0800
IDS Project #: 22X099.01

REVISIONS

REVISED BY 3 BULLETIN #1 DATE 10/25/24	REVISED BY 4 BULLETIN #1 DATE 02/14/25	COMPOSITE SET 9/24/25
APPROVED DATE	APPROVED DATE	REVISED BY DATE
		APPROVED DATE

CITY OF LANCASTER

SAMARITAN'S PURSE PARK RENOVATION

EROSION CONTROL PLAN

PWCP NO. 24-008 | C-403 | SHEET 13 OF 15 SHEETS

CUMULATIVE SHEET X OF X SHEETS

S:\PROJECTS\2022\SHARED\22X099.01 LANC – EL DORADO PARK\05 CAD\02 CIVIL\CD\22X099.01-C401-EROS PLOT DATE: 2/14/2025 2:39:23 PM USER: GILL.IRADUKUNDA

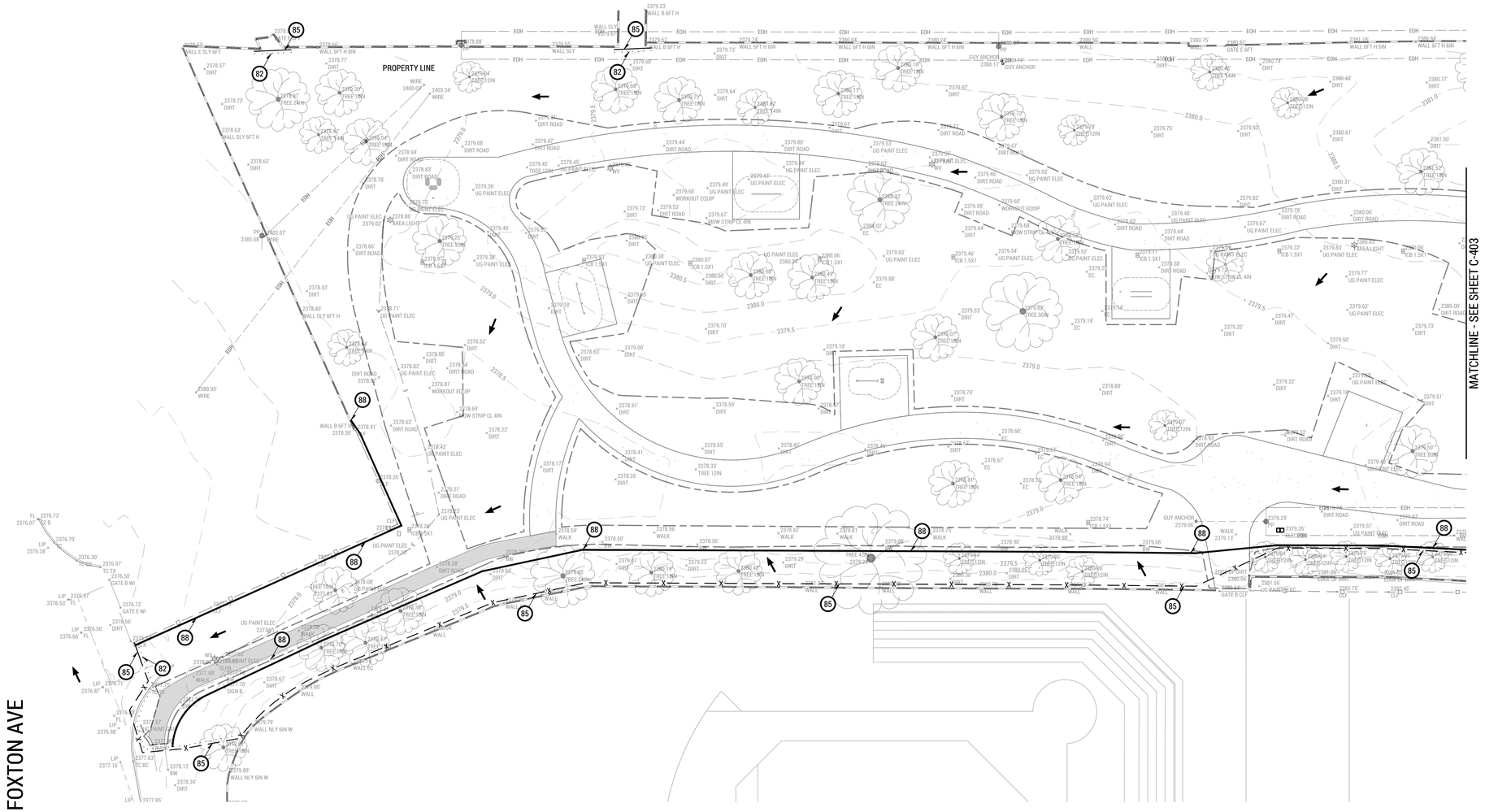

CHECKED BY:

DATE

EROSION & SEDIMENT CONTROL NOTES

81 INSTALL MATERIAL STORAGE AREA PER DETAIL ON SHT. C-410 AND CALIFORNIA STORMWDATER CONSTRUCTION BMP HANDBOOK, CASQA WM-1

82 INSTALL GRAVEL BAG PER DETAIL ON SHT. C-410 AND CALIFORNIA STORMWDATER CONSTRUCTION BMP HANDBOOK, CASQA SE-6

83 INSTALL CONCRETE WASTE MANAGEMENT AREA PER DETAIL ON SHT. C-401 AND CALIFORNIA STORMWDATER CONSTRUCTION BMP HANDBOOK, CASQA WM-8

84 INSTALL STORM INLET PROTECTION PER DETAIL ON SHT. C-410 AND CALIFORNIA STORMWDATER CONSTRUCTION BMP HANDBOOK, CASQA SE-10

85 INSTALL 6' HIGH CHAIN LINK FENCE AND GATE WITH GREEN SCREEN

86 INSTALL SANITARY/SEPTIC WASTE MANAGEMENT PER CALIFORNIA STORMWDATER CONSTRUCTION BMP HANDBOOK, CASQA WM-9

87 STREET SWEEPING PER CALIFORNIA STORMWDATER CONSTRUCTION BMP HANDBOOK, CASQA SE-7

88 INSTALL FIBER ROLL PER DETAIL ON SHT. C-410

LEGEND

— —x— — CHAIN LINK FENCE

FIBER ROLL

FLOW DIRECTION

GRAVEL BAG

20 SCALE 0 20 40

ARCH/ENG STAMP

REGISTERED PROFESSIONAL ENGINEER ADRIAN T. ANDERSON C 60955 EXP. 12/31/26 CIVIL STATE OF CALIFORNIA

811 Know what's below. Call 811 before you dig.

PLANS PREPARED FOR THE CITY OF LANCASTER BY

IDS GROUP

1 PETERS CANYON ROAD, SUITE 130 IRVINE, CA 92606
TEL: 949-387-8500, FAX: 949-387-0800
IDS Project #: 22X099.01

REVISIONS

REVISED BY 3 BULLETIN #1 DATE 10/25/24	REVISED BY 4 BULLETIN #1 DATE 02/14/25	COMPOSITE SET 9/24/25
APPROVED DATE	APPROVED DATE	REVISED BY DATE
		APPROVED DATE

CITY OF LANCASTER

SAMARITAN'S PURSE PARK RENOVATION

EROSION CONTROL PLAN

PWCP NO. 24-008 | C-404 | SHEET 14 OF 15 SHEETS

CUMULATIVE SHEET X OF X SHEETS

S:\PROJECTS\2022\SHARED\22X099.01 LANC – EL DORADO PARK\05 CAD\02 CIVIL\CD\22X099.01-C401-EROS PLOT DATE: 2/14/2025 2:39:37 PM USER: GILL.IRADUKUNDA

NOTES:
1. PROVIDE AMPLE TURNING RADII AS PART OF ENTRANCE, 20' MIN.
2. ENTRANCE WILL REQUIRE PERIODIC TOP DRESSING WITH ADDITIONAL AGGREGATE.
3. SEE TC-1 OF THE CALIFORNIA STORMWATER BMP HANDBOOK".

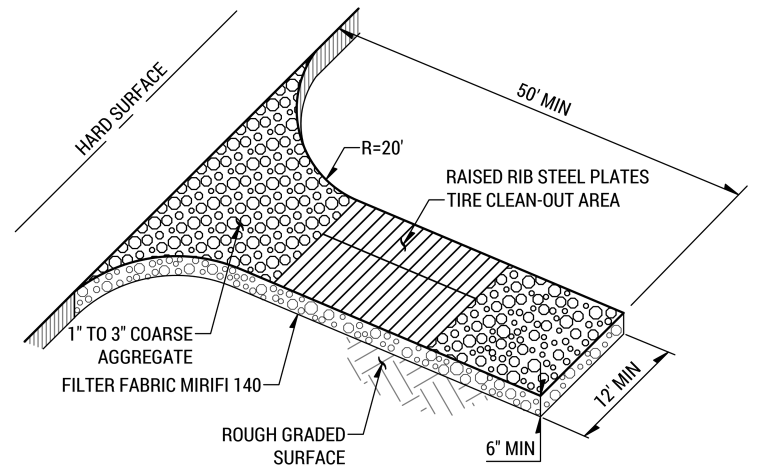

NTS

STABILIZED CONSTRUCTION ENTRANCE 80

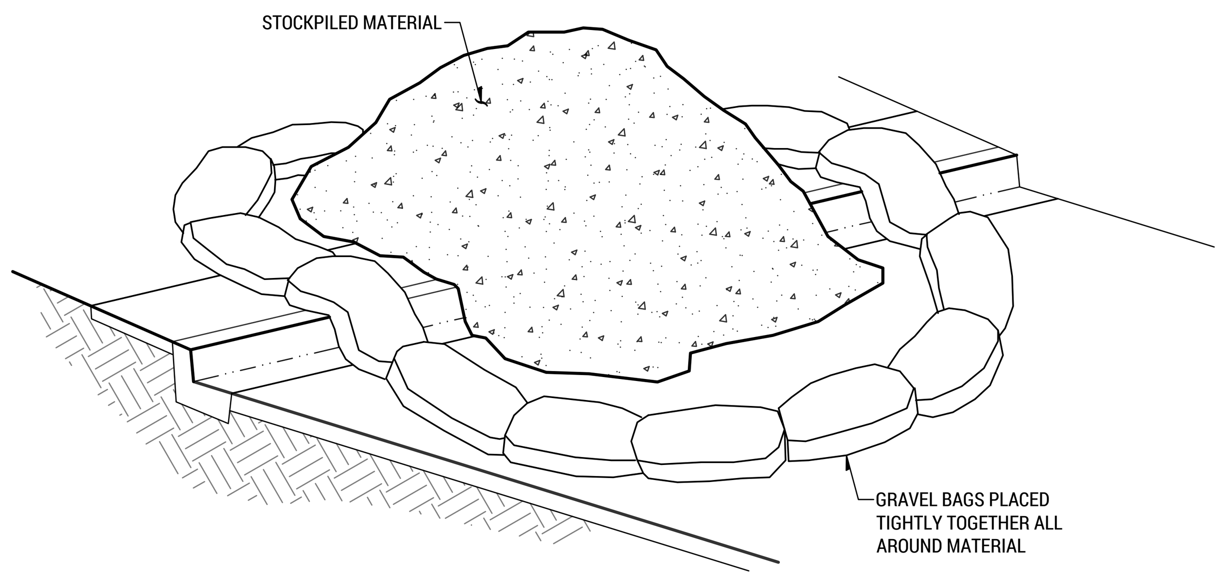

NOTES:
1. DIRT AND OTHER CONSTRUCTION RELATED MATERIALS PLACED IN THE STREET OR ON OTHER IMPERVIOUS SURFACES MUST BE CONTAINED WITH GRAVEL BAGS OR OTHER MEASURES TO PREVENT TRANSPORT TO THE STORM DRAIN SYSTEM.
2. ANY CONSTRUCTION MATERIAL STORED OR STOCKPILED ON-SITE SHALL BE PROTECTED FROM BEING TRANSPORTED BY THE FORCE OF WIND OR WATER.

NTS

MATERIAL STORAGE 81

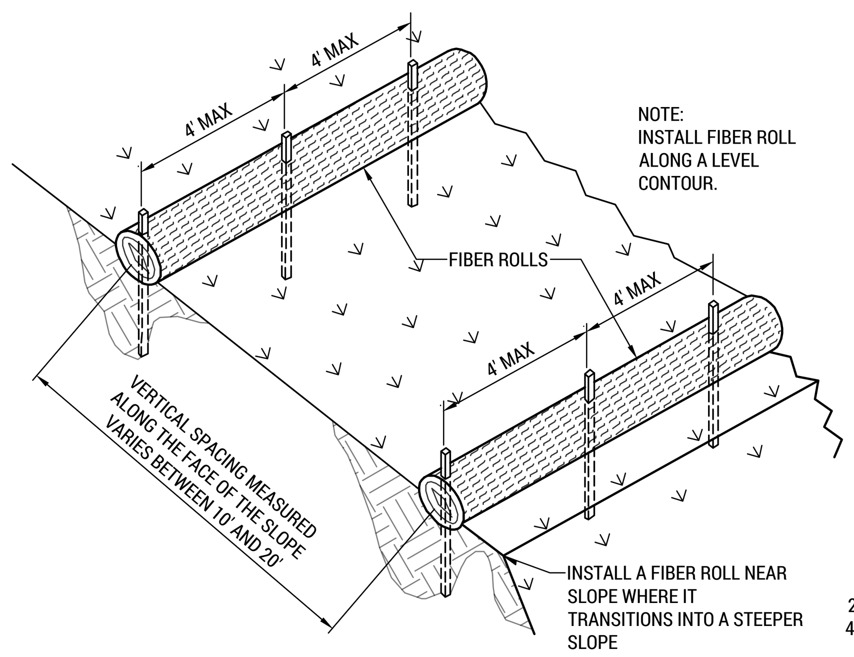

TYPICAL FIBER ROLL INSTALLATION

NTS

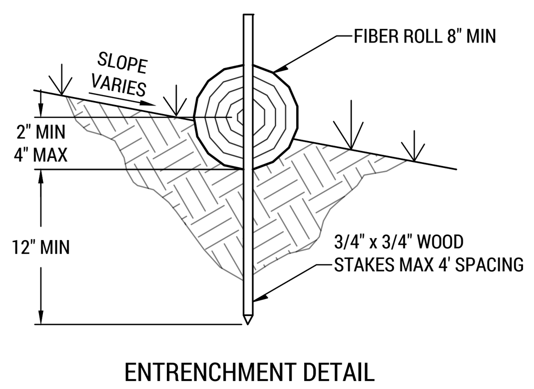

ENTRENCHMENT DETAIL

NTS

NTS

FIBER ROLL 88

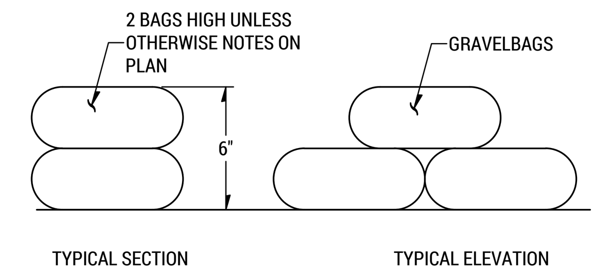

NTS

GRAVEL BAG 82

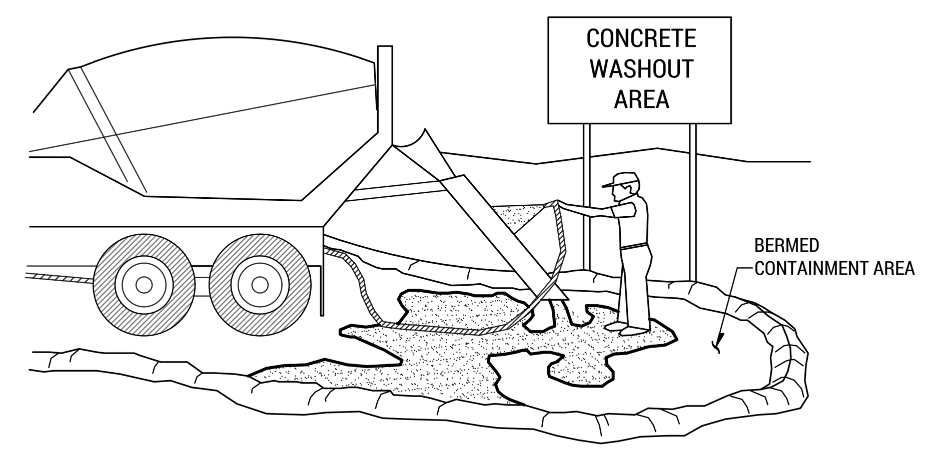

NOTES:
1. EXCESS AND WASTE CONCRETE SHALL NOT BE WASHED INTO THE STREET OR INTO A DRAINAGE SYSTEM.
2. FOR WASHOUT OF CONCRETE AND MORTAR PRODUCTS, A DESIGNATED CONTAINMENT FACILITY OF SUFFICIENT CAPACITY TO RETAIN LIQUID AND SOLID WASTE SHALL BE PROVIDED ON SITE.
3. SLURRY FROM CONCRETE AND ASPHALT SAW CUTTING SHALL BE VACUUMED OR CONTAINED, DRIED, PICKED UP AND DISPOSED OF PROPERLY.

NTS

CONCRETE WASTE MANAGEMENT 83

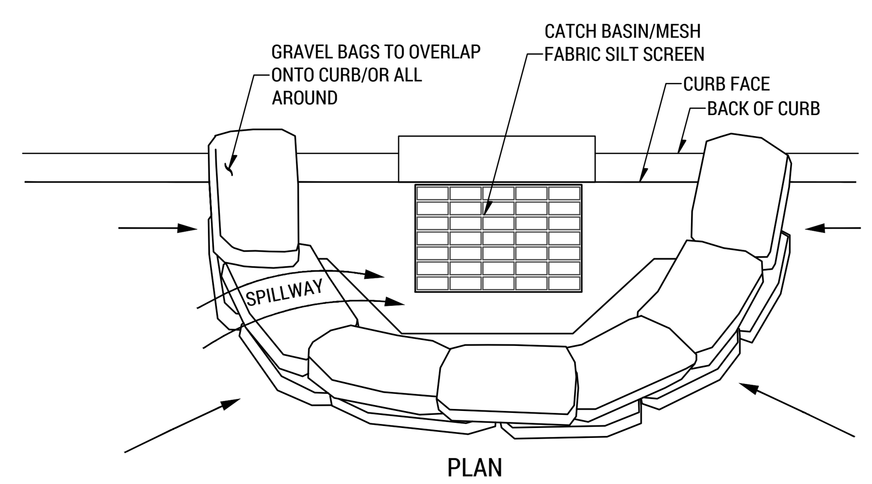

PLAN

NTS

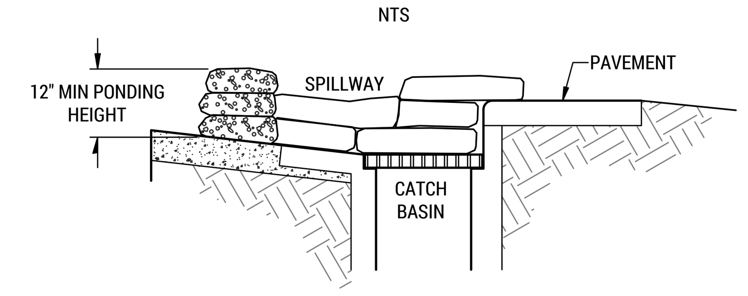

SECTION

NTS

NOTES:
1. CATCH BASIN/INLET PROTECTION SHALL BE INSTALLED WHENEVER THERE IS A POTENTIAL OF STORM WATER OR NON-STORM WATER BEING DISCHARGED INTO IT.
2. INLET PROTECTION IS REQUIRED ALONG WITH OTHER POLLUTION PREVENTION MEASURES SUCH AS; EROSION CONTROL, SOIL STABILIZATION, AND MEASURES TO PREVENT TRACKING ONTO PAVED SURFACES.
3. MODIFY INLET PROTECTION AS NEEDED TO AVOID CREATING TRAFFIC HAZARDS.
4. INCLUDE INLET PROTECTION MEASURES AT HILLSIDE V-DITCHES AND MISC. DRAINAGE SWALES.
5. INLET PROTECTION SHALL BE INSPECTED AND ACCUMULATED SEDIMENTS REMOVED. SEDIMENT SHALL BE DISPOSED OF PROPERLY AND IN A MANNER THAT ASSURES THAT THE SEDIMENT DOES NOT ENTER THE STORM DRAIN SYSTEM.
6. DAMAGED BAGS SHALL BE REPLACE IMMEDIATELY.
7. ADDITIONAL GRAVEL BAG SEDIMENT TRAPS SHALL BE PLACED AT INTERVALS AS INDICATED ON SITE PLAN.

NTS

INLET PROTECTION 84

EROSION AND SEDIMENT CONTROL:

1. EVERY EFFORT SHOULD BE MADE TO ELIMINATE THE DISCHARGE OF NON-STORMWATER FROM THE PROJECT SITE AT ALL TIMES.
2. ERODED SEDIMENTS AND OTHER POLLUTANTS MUST BE RETAINED ON-SITE AND MAY NOT BE TRANSPORTED FROM THE SITE VIA SHEET FLOW, SWALES, AREA DRAINS, NATURAL DRAINAGE COURSES OR WIND.
3. STOCKPILES OF EARTH AND OTHER CONSTRUCTION RELATED MATERIALS MUST BE PROTECTED FROM BEING TRANSPORTED FROM THE SITE BY THE FORCES OF WIND OR WATER.
4. FUELS, OILS, SOLVENTS, AND OTHER TOXIC MATERIALS MUST BE STORED IN ACCORDANCE WITH THEIR LISTING AND ARE NOT TO CONTAMINATE THE SOIL AND SURFACE WATERS. ALL APPROVED STORAGE CONTAINERS ARE TO BE PROTECTED FROM THE WEATHER. SPILLS MUST BE CLEANED UP IMMEDIATELY AND DISPOSED OF IN A PROPER MANNER. SPILLS MAY NOT BE WASHED INTO THE DRAINAGE SYSTEM.
5. EXCESS OR WASTE CONCRETE MAY NOT BE WASHED INTO THE PUBLIC WAY OR ANY OTHER DRAINAGE SYSTEM. PROVISIONS SHALL BE MADE TO RETAIN CONCRETE WASTES ON-SITE UNTIL THEY CAN BE DISPOSED OF AS SOLID WASTE.
6. TRASH AND CONSTRUCTION RELATED SOLID WASTES MUST BE DEPOSITED INTO A COVERED RECEPTACLE TO PREVENT CONTAMINATION OF RAINWATER AND DISPERSAL BY WIND.
7. SEDIMENTS AND OTHER MATERIALS MAY NOT BE TRACKED FROM THE SITE BY VEHICLE TRAFFIC. THE CONSTRUCTION ENTRANCE ROADWAYS MUST BE STABILIZED SO AS TO INHIBIT SEDIMENTS FROM BEING DEPOSITED INTO THE PUBLIC WAY. ACCIDENTAL DEPOSITIONS MUST BE SWEPT UP IMMEDIATELY AND MAY NOT BE WASHED DOWN BY RAIN OR OTHER MEANS.
8. ANY SLOPES WITH DISTURBED SOILS OR DENUDED OF VEGETATION MUST BE STABILIZED SO AS TO INHIBIT EROSION BY WIND AND WATER.
9. CONTRACTOR TO COMPLY WITH CALIFORNIA STORMWATER BEST MANAGEMENT PRACTICE HANDBOOK FOR CONSTRUCTION ACTIVITY (BMP HANBOOK) CURRENT ADAPTED EDITION.

EROSION AND SEDIMENT CONTROL GENERAL NOTES:

1. IN CASE OF EMERGENCY, CALL (RESPONSIBLE PERSON) AT (24 HOUR TELEPHONE).
2. A STANDBY CREW FOR EMERGENCY WORK SHALL BE AVAILABLE AT ALL TIMES DURING THE RAINY SEASON (NOVEMBER 1 TO APRIL 15). NECESSARY MATERIALS SHALL BE AVAILABLE ON-SITE AND STOCKPILED AT CONVENIENT LOCATIONS TO FACILITATE RAPID CONSTRUCTION OF EMERGENCY DEVICES WHEN RAIN IS IMMINENT.
3. EROSION CONTROL DEVICES SHOWN ON THIS PLAN MAY BE REMOVED WHEN APPROVED BY THE CITY BUILDING INSPECTOR IF THE GRADING OPERATIONS HAS PROGRESSED TO THE POINT WHERE THEY ARE NO LONGER REQUIRED.
4. GRADED AREAS ADJACENT TO FILL SLOPES LOCATED AT THE SITE PERIMETER MUST DRAIN AWAY FROM THE TOP OF SLOPE AT THE CONCLUSION OF EACH WORKING DAY.
5. ALL SILT AND DEBRIS SHALL BE REMOVED FROM ALL DEVICES WITHIN 24 HOURS AFTER EACH RAINSTORM.
6. A GUARD SHALL BE POSTED ON THE SITE WHENEVER THE DEPTH OF WATER IN ANY DEVICE EXCEEDS 2 FEET. THE DEVICE SHALL BE DRAINED OR PUMPED DRY WITHIN 24 HOURS AFTER EACH RAINSTORM.
7. EXCEPT AS OTHERWISE APPROVED BY THE CITY BUILDING INSPECTOR, ALL REMOVABLE PROTECTIVE DEVICES SHOWN SHALL BE IN PLACE AT THE END OF EACH WORKING DAY OR WEEKENDS WHEN THE 5-DAY RAIN PROBABILITY FORECAST EXCEEDS 40%.
8. ALL LOOSE SOIL AND DEBRIS WHICH MAY CREATE A POTENTIAL HAZARD TO OFF-SITE PROPERTY SHALL BE REMOVED FROM THE SITE AS DIRECTED BY THE CITY BUILDING INSPECTOR.
9. THE PLACEMENT OF ADDITIONAL DEVICES TO REDUCE EROSION DAMAGE WITHIN THE SITE SHALL BE AT THE DISCRETION OF THE CITY ENGINEER.
10. DESILTING BASINS MAY NOT BE REMOVED OR MADE INOPERABLE BETWEEN NOVEMBER 1 AND APRIL 15 WITHOUT THE APPROVAL OF THE CITY BUILDING INSPECTOR.
11. EROSION CONTROL DEVICES SHALL NOT BE MODIFIED WITHOUT THE APPROVAL OF THE CITY ENGINEER. REVISED PLANS SHALL BE SUBMITTED TO THE CITY FOR APPROVAL.
12. THE CONTRACTOR SHALL SUPERVISE EROSION CONTROL WORK IN ACCORDANCE WITH THE APPROVED PLANS. THE WORK ALSO INCLUDES, BUT IS NOT LIMITED TO, INSPECTION OF EROSION CONTROL MEASURES BEFORE RAINSTORM AND 5-DAY PROBABILITY RAIN FORECAST.
13. THE UNDERSIGNED CIVIL ENGINEER HAS INSPECTED THE SITE, AND THESE PLANS REFLECT THE EXISTING CONDITIONS OF THE PROJECT REQUIRING EROSION PROTECTION.

(COMPANY NAME) (ENGINEER PRINT NAME & SIGNATURE)

(ADDRESS) (R.C.E. NO. & EXP. DATE)

CHECKED BY:

DATE

BMP MANAGEMENT PRACTICE REFERENCE LIST:

EROSION CONTROL
EC1 - SCHEDULING
EC2 - PRESERVATION OF EXISTING VEGETATION
EC3 - HYDRAULIC MULCH
EC4 - HYDROSEEDING
EC5 - SOIL BINDERS
EC6 - STRAW MULCH
EC7 - GEOTEXTILES & MATS
EC8 - WOOD MULCHING
EC9 - EARTH DIKES AND DRAINAGE SWALES
EC10 - VELOCITY DISSIPATION DEVICES
EC11 - SLOPE DRAINS
EC12 - STREAMBANK STABILIZATION
EC13 - RESERVED
EC14 - COMPOST BLANKETS
EC15 - SOIL PREPARATION\ROUGHENING
EC16 - NON-VEGETATED STABILIZATION

TEMPORARY SEDIMENT CONTROL
SE1 - SILT FENCE
SE2 - SEDIMENT BASIN
SE3 - SEDIMENT TRAP SE4 - CHECK DAM
SE5 - FIBER ROLLS
SE6 - GRAVEL BAG BERM
SE7 - STREET SWEEPING AND VACUUMING
SE8 - SANDBAG BARRIER
SE9 - STRAW BALE BARRIER
SE10 - STORM DRAIN INLET PROTECTION
SE11 - ACTIVE TREATMENT SYSTEMS
SE12 - TEMPORARY SILT DIKE
SE13 - COMPOST SOCKS & BERMS
SE14 - BIOFILTER BAGS

WIND EROSION CONTROL
WE1 - WIND EROSION CONTROL

EQUIPMENT TRACKING CONTROL
TC1 - STABILIZED CONSTRUCTION ENTRANCE EXIT
TC2 - STABILIZED CONSTRUCTION ROADWAY
TC3 - ENTRANCE/OUTLET TIRE WASH

NON-STORMWATER MANAGEMENT
NS1 - WATER CONSERVATION PRACTICES
NS2 - DEWATERING OPERATIONS
NS3 - PAVING AND GRINDING OPERATIONS
NS4 - TEMPORARY STREAM CROSSING
NS5 - CLEAR WATER DIVERSION
NS6 - ILLICIT CONNECTION/DISCHARGE
NS7 - POTABLE WATER/IRRIGATION
NS8 - VEHICLE AND EQUIPMENT CLEANING
NS9 - VEHICLE AND EQUIPMENT FUELING
NS10 - VEHICLE AND EQUIPMENT MAINTENANCE
NS11 - PILE DRIVING OPERATIONS
NS12 - CONCRETE CURING
NS13 - CONCRETE FINISHING
NS14 - MATERIAL AND EQUIPMENT USE
NS15 - DEMOLITION ADJACENT TO WATER
NS16 - TEMPORARY BATCH PLANTS

WASTE MANAGEMENT & MATERIAL POLLUTION CONTROL
WM1 - MATERIAL DELIVERY AND STORAGE
WM2 - MATERIAL USE
WM3 - STOCKPILE MANAGEMENT
WM4 - SPILL PREVENTION AND CONTROL
WM5 - SOLID WASTE MANAGEMENT
WM6 - HAZARDOUS WASTE MANAGEMENT
WM7 - CONTAMINATION SOIL MANAGEMENT
WM8 - CONCRETE WASTE MANAGEMENT
WM9 - SANITARY/SEPTIC WASTE MANAGEMENT
WM10 - LIQUID WASTE MANAGEMENT

ARCH/ENG STAMP

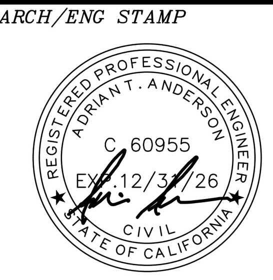

Know what's **below.** **Call 811** before you dig.

PLANS PREPARED FOR THE CITY OF LANCASTER BY

IDS
IDS GROUP
1 PETERS CANYON ROAD, SUITE 130 IRVINE, CA 92606
TEL: 949-387-8500, FAX: 949-387-0800
IDS Project #: 22X099.01

REVISIONS

REVISED BY △3 BULLETIN #1 DATE 10/25/24	REVISED BY △4 BULLETIN #1 DATE 02/14/25	COMPOSITE SET 9/24/25 REVISED BY ______ DATE
APPROVED ______ DATE	APPROVED ______ DATE	APPROVED ______ DATE

CITY OF LANCASTER

SAMARITAN'S PURSE PARK RENOVATION

EROSION CONTROL DETAILS

PWCP NO. 24-008 | C-410 | SHEET 15 OF 15 SHEETS

S:\PROJECTS\2022\SHARED\22X099.01 LANC – EL DORADO PARK\05 CAD\02 CIVIL\CD\22X099.01–C410–EROS PLOT DATE: 2/14/2025 2:39:46 PM USER: GILL.IRADUKUNDA

CITY OF LANCASTER

PUBLIC WORKS CONSTRUCTION PROJECT NO. 24-008

EL DORADO PARK RENOVATIONS

44501 5TH ST E LANCASTER CA

SEWER GENERAL NOTES

1. ALL WORK SHALL CONFORM TO THE CURRENT STANDARD SPECIFICATIONS FOR PUBLIC WORKS CONSTRUCTION AND ALL "STANDARD PLANS" AND "SPECIAL PROVISIONS" REFERENCED.
2. ALL WORK IN THE PUBLIC RIGHT-OF-WAY SHALL BE PER THE CURRENT CITY OF LANCASTER STANDARDS, POLICIES, CODES, AND PERMIT REQUIREMENTS, AND SHALL BE DONE UNDER THE INSPECTION OF, AND TO THE SATISFACTION OF THE SENIOR DIRECTOR - DEVELOPMENT SERVICES OR HIS DESIGNEE. APPLICATION FOR INSPECTION BY THE CITY OF LANCASTER SHALL BE MADE BY THE CONTRACTOR AT LEAST TWENTY-FOUR (24) HOURS BEFORE THE SERVICES THEREOF WILL BE REQUIRED. PHONE (661)723-6157.
3. PRIOR TO ISSUANCE OF THE REQUIRED SEWER CONSTRUCTION PERMIT, THE CONTRACTOR SHALL FILE A PERMIT FOR EXCAVATIONS AND TRENCHES FROM THE STATE OF CALIFORNIA DIVISION OF INDUSTRIAL SAFETY, AND A CERTIFICATE OF WORKER'S COMPENSATION INSURANCE WITH THE CITY OF LANCASTER, 44933 N. FERN AVENUE, LANCASTER, CALIFORNIA 93534, NAMED AS THE CERTIFICATE HOLDER TO BE NOTIFIED 30 DAYS PRIOR TO CANCELLATION OF POLICY.
4. PRIOR TO ISSUANCE OF THE REQUIRED SEWER CONSTRUCTION PERMIT, CITY SEWER MAINTENANCE FEES SHALL BE PAID FOR A PERIOD TO COVER NOT LESS THAN 12 MONTHS.
5. APPROVAL OF THIS PLAN BY THE CITY OF LANCASTER DOES NOT CONSTITUTE A REPRESENTATION AS TO THE ACCURACY OF, THE LOCATION OF, OR THE EXISTENCE OR NON-EXISTENCE OF, ANY UNDERGROUND UTILITY PIPE OR STRUCTURE WITHIN THE LIMITS OF THIS PROJECT. THIS NOTE APPLIES TO ALL PAGES.
6. THE CONTRACTOR'S ATTENTION IS DIRECTED TO SECTION 7-10.4.1 OF THE STANDARD SPECIFICATIONS FOR PUBLIC WORKS CONSTRUCTION IN REGARD TO SAFETY ORDERS AND SHALL CONFORM TO THE "MINIMUM PUBLIC SAFETY REQUIREMENTS" AS SHOWN ON LOS ANGELES DEPARTMENT OF PUBLIC WORKS' STANDARD 6008-1.
7. NO REVISIONS SHALL BE MADE TO THESE PLANS WITHOUT THE APPROVAL OF THE SENIOR DIRECTOR - DEVELOPMENT SERVICES.
8. ALL REVISIONS TO IMPROVEMENT PLANS, OR MATERIAL SUBSTITUTION REQUESTS, PROPOSED DURING CONSTRUCTION SHALL BE SUBMITTED IN WRITING TO THE CAPITAL ENGINEERING DIVISION BY THE ENGINEER OF RECORD AND SHALL FOLLOW THE PROCEDURE FOR APPROVAL OUTLINED IN THE MOST CURRENT CITY OF LANCASTER ENGINEERING DESIGN GUIDELINES.
9. NO REPRESENTATIVE OF THE DEVELOPMENT SERVICES DEPARTMENT WILL SURVEY OR LAY OUT ANY PORTION OF THE WORK.
10. GRADES TO WHICH THIS IMPROVEMENT IS TO BE CONSTRUCTED ARE SHOWN ON PLANS AND PROFILES. GRADE POINTS FOR TOP OF CURBS, CENTERLINE OF STREETS, OR CENTERLINE OF ALLEYS ARE SHOWN BY CIRCLES ON PROFILES AT ALL POINTS BETWEEN DESIGNATED POINTS. THE GRADE SHALL BE ESTABLISHED SO AS TO CONFORM TO A STRAIGHT LINE DRAWN BETWEEN SAID DESIGNATED POINTS.
11. AS-BUILT PLANS AND ASSET/ATTRIBUTE DATA SHALL BE SUBMITTED TO THE CITY PRIOR TO ACCEPTANCE OF IMPROVEMENTS.
12. AFTER BACKFILLING AND PRIOR TO STREET PAVING, AN INSPECTION OF SAID LINE BY VIDEO SHALL BE REQUIRED AT NO COST TO THE CITY. ALL NEW MAINLINE SEWERS SHALL BE VIDEO INSPECTED PER THE PROVISIONS OF SECTION 500- 1.1.5 OF THE STANDARD SPECIFICATIONS. THE RESULTS OF THE VIDEO INSPECTION SHALL BE RECORDED IN DVD FORMAT AND A COPY SHALL BE PROVIDED TO THE CITY AT NO COST. THE DEVELOPER OF THE PROJECT SHALL NOTIFY THE CITY OF LANCASTER IN WRITING AT LEAST 48 HOURS IN ADVANCE OF THE SCHEDULED DATE OF THE VIDEO INSPECTION.
13. WHEN IMPROVEMENT PLANS HAVE BEEN SUBMITTED TO THE CITY FOR CHECKING AND THE CHECKING PROCESS HAS BEEN INTERRUPTED FOR A PERIOD OF ONE YEAR OR MORE, THE PLANS SHALL BE DEEMED ABANDONED. APPROVED IMPROVEMENT PLANS FOR ALL SUBDIVISIONS SHALL BE DEEMED ABANDONED IF CONSTRUCTION HAS NOT COMMENCED WITHIN TWO YEARS OF THE LATEST APPROVAL DATE (ONE YEAR FOR NON-SUBDIVISIONS). IF CONSTRUCTION IS INTERRUPTED FOR A PERIOD OF ONE YEAR OR MORE, THE PLANS SHALL BE DEEMED ABANDONED. ABANDONED PLANS SHALL BE RE-SUBMITTED FOR REVIEW AND ALL FEES SHALL BE PAID IN ACCORDANCE WITH THE CITY'S ABANDONED PLANS POLICY PRIOR TO ANY PERMITS BEING ISSUED.
14. VITRIFIED CLAY PIPE JOINTS SHALL BE TYPE "D" OR "G" PER STANDARD SPECIFICATION SECTION 208-2.
15. IF A POWER POLE IS WITHIN THREE FEET OF THE SEWER, THE SEWER SHALL BE ENCASED PER STANDARD PLAN 2023-2 CASE II, TWO FEET ON EACH SIDE FROM THE POINT OF INTERFERENCE.
16. ALL JOINTS BETWEEN CAST IRON PIPE AND VITRIFIED CLAY PIPE SHALL BE MADE WITH A RUBBER SLEEVE JOINT, TYPE "D" (WITH BUSHING IF NECESSARY) PER STANDARD SPECIFICATIONS SECTION 208-2.
17. WYE BRANCHES SHALL BE USED FOR CONNECTIONS TO MAINLINE SEWERS EXCEPT AS NOTED.
18. IF DURING THE COURSE OF CONSTRUCTION, IT IS DETERMINED THAT THERE IS LESS THAN FOUR FEET OF COVER OVER THE TOP OF V.C.P. MAINLINE SEWER OR HOUSE LATERAL WHICH IS NOT INDICATED ON THE PLANS, THE PIPE SHALL BE ENCASED PER STANDARD PLAN 2023-2, CASE II, UNLESS OTHERWISE APPROVED BY THE SENIOR DIRECTOR - DEVELOPMENT SERVICES.
19. RESURFACE ALL TRENCHES WITHIN PAVED AREAS, TO MEET CITY OF LANCASTER DEVELOPMENT SERVICES OR CALIFORNIA STATE HIGHWAY REQUIREMENTS, IN ACCORDANCE WITH THE PERMITS.
20. ANY STRIPING DAMAGED DURING CONSTRUCTION SHALL BE REPAIRED TO ITS ORIGINAL CONDITION.
21. FULL COMPLIANCE WITH THE CITY OF LANCASTER STREET OPENING AND PAVEMENT RESTORATION REGULATIONS WILL BE REQUIRED FOR BACKFILL IN STREETS. CERTIFICATION OF BACKFILL COMPACTION AND SAND EQUIVALENTS BY A QUALIFIED CIVIL ENGINEER OR SOILS LAB SHALL BE PROVIDED BY THE PERMITTEE PRIOR TO THE ISSUANCE OF CERTIFICATE OF PARTIAL ACCEPTANCE.
22. SEWERS ARE TO BE TESTED FOR LEAKAGE PER SECTION 306-7.8 OF THE STANDARD SPECIFICATIONS AND SPECIAL PROVISIONS. A SECOND AIR PRESSURE TEST, IN ACCORDANCE WITH SECTION 306-7.8.2.4, SHALL BE REQUIRED AFTER UTILITIES HAVE BEEN INSTALLED.
23. NO CONNECTION FOR THE DISPOSAL OF INDUSTRIAL WASTES SHALL BE MADE TO SEWERS SHOWN ON THESE DRAWINGS UNTIL PERMITS FOR INDUSTRIAL WASTEWATER DISCHARGE HAVE BEEN ISSUED BY THE CITY OF LANCASTER AND THE LOS ANGELES COUNTY SANITATION DISTRICT FOR SAID CONNECTION.
24. PER THE LATEST EDITION OF L.A. COUNTY SANITATION DISTRICT SPECIFICATIONS, BEFORE BREAKING INTO OR CONSTRUCTION ON A COUNTY SANITATION DISTRICT SEWER AND PRIOR TO FINAL ACCEPTANCE OF THE PROJECT, THE SANITATION DISTRICT INSPECTOR SHALL BE NOTIFIED BY PHONE, 48 HOURS BEFORE ANY CONSTRUCTION, AT (661) 729-5320 SO THAT THE REQUIRED INSPECTION CAN BE MADE.
25. SEWER TRENCH BACKFILL ~~WITHIN RIGHT-OF-WAY OR EASEMENT:~~
    a. BACKFILL TRENCH AND REPLACE OTHER EARTH REMOVED SO AS TO ACHIEVE THE NATURAL OR FINISHED GRADES AND SLOPES SHOWN ON THE GRADING PLAN APPROVED BY THE CITY CAPITAL ENGINEERING DIVISION.
    b. ALL BACKFILL AND FILLS OF STREET RIGHT-OF-WAY OR EASEMENT SHALL BE COMPACTED TO 90% OF MAXIMUM DENSITY AS DETERMINED BY ASTM SOIL COMPACTION TEST D 1557 METHOD "D" UNLESS OTHERWISE SPECIFIED. THIS SHALL BE CERTIFIED BY A QUALIFIED CIVIL ENGINEER OR SOILS LAB. THIS CERTIFICATION SHALL BE SUBMITTED TO THE CITY INSPECTOR, PRIOR TO ACCEPTANCE OF THE WORK BY THE CITY.
26. USE A MINIMUM OF 4" BEDDING PER SECTION 306-6.1 OF THE STANDARD SPECIFICATIONS FOR PUBLIC WORKS CONSTRUCTION; BEDDING SHALL CONSIST OF 3/4 CRUSHED ROCK.
27. FINAL "FIELD (RED MARKED-UP) AS-BUILTS" SIGNED AND DATED BY THE CONTRACTOR AND ALL COMPACTION REPORTS SHALL BE PROVIDED TO THE CITY PUBLIC WORKS INSPECTOR PRIOR TO "AIR TEST".
28. AN APPROVED BACKWATER VALVE IS REQUIRED WHERE THE PAD IS LOWER IN ELEVATION THAN THE TOP OF THE NEXT UPSTREAM MANHOLE ELEVATION.
29. THE SUBJECT SANITARY SEWER WILL NOT BE ACCEPTED FOR MAINTENANCE UNTIL SUCH TIME AS THE OUTLET SEWER IS BUILT AND ACCEPTED BY THE CITY OF LANCASTER FOR PUBLIC USE.
30. ALL WORK SHALL COMPLY WITH THE CITY OF LANCASTER HOLIDAY MORATORIUM POLICY. NO EXCAVATION OR WORK SHALL OCCUR WITHIN THE PUBLIC RIGHT-OF-WAY ON PRIMARY ARTERIALS, SECONDARY ARTERIALS, AND COLLECTOR STREETS BETWEEN NOVEMBER 15TH TO JANUARY 2ND, EXCEPT WORK PERTAINING TO PUBLIC SAFETY OR WITH THE WRITTEN PERMISSION OF THE CITY MANAGER. WORK COMMENCED PRIOR TO THE RESTRICTION PERIOD MUST BE IN SUCH A CONDITION THAT IT WILL BE RESURFACED PRIOR TO NOVEMBER 15TH.

STORM DRAIN GENERAL NOTES

1. ALL WORK SHALL CONFORM TO THE CURRENT STANDARD SPECIFICATIONS FOR PUBLIC WORKS CONSTRUCTION AND ALL "STANDARD PLANS" AND "SPECIAL PROVISIONS" REFERENCED.
2. ALL WORK IN THE PUBLIC RIGHT-OF-WAY SHALL BE PER THE CURRENT CITY OF LANCASTER STANDARDS, POLICIES, CODES, AND PERMIT REQUIREMENTS, AND SHALL BE DONE UNDER THE INSPECTION OF, AND TO THE SATISFACTION OF THE SENIOR DIRECTOR - DEVELOPMENT SERVICES OR HIS REPRESENTATIVE. APPLICATION FOR INSPECTION BY THE CITY OF LANCASTER SHALL BE MADE BY THE CONTRACTOR AT LEAST TWENTY-FOUR (24) HOURS BEFORE THE SERVICES THEREOF WILL BE REQUIRED. PHONE (661)723-6157.
3. APPROVAL OF THIS PLAN BY THE CITY OF LANCASTER DOES NOT CONSTITUTE A REPRESENTATION AS TO THE ACCURACY OF, THE LOCATION OF, OR THE EXISTENCE OR NON-EXISTENCE OF, ANY UNDERGROUND UTILITY PIPE OR STRUCTURE WITHIN THE LIMITS OF THIS PROJECT. THIS NOTE APPLIES TO ALL PAGES.
4. THE CONTRACTOR'S ATTENTION IS DIRECTED TO SECTION 7-10.4.1 OF THE STANDARD SPECIFICATIONS FOR PUBLIC WORKS CONSTRUCTION IN REGARD TO SAFETY ORDERS AND SHALL CONFORM TO THE "MINIMUM PUBLIC SAFETY REQUIREMENTS" AS SHOWN ON LOS ANGELES DEPARTMENT OF PUBLIC WORKS' STANDARD 6008-1.
5. NO REVISIONS SHALL BE MADE TO THESE PLANS WITHOUT THE APPROVAL OF THE SENIOR DIRECTOR - DEVELOPMENT SERVICES.
6. ALL REVISIONS TO IMPROVEMENT PLANS, OR MATERIAL SUBSTITUTION REQUESTS, PROPOSED DURING CONSTRUCTION SHALL BE SUBMITTED IN WRITING TO THE CAPITAL ENGINEERING DIVISION BY THE ENGINEER OF RECORD AND SHALL FOLLOW THE PROCEDURE FOR APPROVAL OUTLINED IN THE MOST CURRENT CITY OF LANCASTER ENGINEERING DESIGN GUIDELINES.
7. NO CONCRETE SHALL BE PLACED UNTIL THE FORMS AND REINFORCING STEEL HAVE BEEN PLACED, INSPECTED, AND APPROVED.
8. ALL STRUCTURAL CONCRETE SHALL BE PORTLAND CEMENT CONCRETE WITH AN ULTIMATE 28-DAY COMPRESSIVE STRENGTH OF 3250 PSI, UNLESS OTHERWISE NOTED.
9. ALL EXPOSED EDGES SHALL BE FINISHED WITH A 3/4" CHAMFER.
10. ALL BACKFILL AND FILLS OUTSIDE OF STREET RIGHT-OF-WAY SHALL BE COMPACTED TO 90 PERCENT OF MAXIMUM DENSITY AS DETERMINED BY ASTM SOIL COMPACTION TEST D1557 METHOD "D" UNLESS OTHERWISE SPECIFIED. CERTIFICATION BY A REGISTERED CALIFORNIA SOILS ENGINEER SHALL BE SUBMITTED TO THE CAPITAL ENGINEERING DIVISION PRIOR TO ACCEPTANCE OF THE WORK BY THE CITY.
11. ALL BACKFILL AND FILLS WITHIN STREET RIGHT-OF-WAY SHALL BE COMPACTED IN ACCORDANCE WITH SECTION 306-12 OF THE STANDARD SPECIFICATIONS UNLESS OTHERWISE NOTED AND INSPECTED BY THE CITY PUBLIC WORKS INSPECTOR. CONTRACTOR SHALL NOTIFY THE CITY PUBLIC WORKS INSPECTOR AT LEAST 24 HOURS IN ADVANCE PRIOR TO SOIL TESTING BY THE PRIVATE SOILS ENGINEER.
12. ALL BACKFILL AND FILL AROUND CLOSED CONDUIT IN THE STREET RIGHT-OF-WAY SHALL BE BROUGHT UP TO SUBGRADE OF THE ROAD OR TO 2 FEET ABOVE THE TOP OF CONDUIT, WHICHEVER IS LESS. THE CITY PUBLIC WORKS INSPECTOR SHALL INSPECT ALL BACKFILL AND FILL ABOVE AFOREMENTIONED LIMITS. THE CONTRACTOR SHALL CONTACT THE CAPITAL ENGINEERING DIVISION AT (661) 723-6157 TO REQUEST AN INSPECTION AT LEAST 24 HOURS IN ADVANCE.
13. THE CITY PUBLIC WORKS INSPECTOR MAY HAVE THE OPTION TO REQUIRE CONCRETE BACKFILL DURING CONSTRUCTION WHEN THE PIPE HAS LESS THAN 1 FOOT OF COVER AND IS SUBJECT TO HEAVY EQUIPMENT TRAFFIC. THE CONCRETE BACKFILL SHALL CONSIST OF 1:3:5 MIX, PORTLAND CEMENT CONCRETE POURED FROM WALL TO WALL OF TRENCH AND FROM BOTTOM OF TRENCH TO A MINIMUM OF 4 INCHES OVER THE TOP OF THE PIPE.
14. ALL PIPES SHALL BE PLACED IN TRENCH IN NATURAL GROUND AND/OR COMPACTED FILL. THE GROUND LEVEL BEFORE THE TRENCHING SHALL BE AT LEAST 3 FEET ABOVE THE TOP OF THE PIPE ELEVATION, OR AT FINISH SURFACE ELEVATION, WHICHEVER IS LESS. ALL BACKFILL IN EASEMENTS SHALL BE COMPACTED TO THE DENSITY REQUIRED BY THE GRADING PLAN OR SOILS REPORT, WHICHEVER IS MORE RESTRICTIVE.
15. PIPE BEDDING SHALL BE IN ACCORDANCE TO LACODPW STANDARD DRAWING NO. 3080-2, CASE 3, EXCEPT BELL AND SPIGOT PIPE WHICH SHALL BE CASE 2 BEDDING, UNLESS OTHERWISE SHOWN. "W" VALUES SHALL BE AS SPECIFIED ON STANDARD DRAWING NO. 3080-2 FOR CASE 3 BEDDING, NOTES 3(A), 3(B), AND 3(C), IF THE "W" VALUE AT THE TIP OF THE PIPE IS EXCEEDED, THE BEDDING SHALL BE MODIFIED, AND/OR PIPE OF ADDITIONAL STRENGTH SHALL BE PROVIDED. THE PROPOSED MODIFICATION SHALL BE APPROVED BY THE CAPITAL ENGINEERING DIVISION.
16. PIPE SHALL BE EMBEDDED 5 INCHES INTO ALL STRUCTURES INCLUDING INLET AND OUTLET HEADWALLS, UNLESS OTHERWISE SPECIFIED.
17. A SYSTEM FOR CONTRIBUTORY DRAINAGE OPERABLE AT ALL TIMES SHALL BE PROVIDED BY THE CONTRACTOR TO THE SATISFACTION OF THE SENIOR DIRECTOR - DEVELOPMENT SERVICES UNTIL THIS STORM DRAIN SYSTEM IS ACCEPTED BY THE CITY.
18. EXISTING UTILITIES SHALL BE MAINTAINED IN PLACE BY THE CONTRACTOR, UNLESS OTHERWISE NOTED.
19. WHERE THE UTILITIES ARE INDICATED IN THE DRAWINGS TO BE SUPPORTED, SAID SUPPORTS SHALL BE IN ACCORDANCE WITH S.S.P.W.C. STANDARD PLAN NO. 224-2, UNLESS OTHERWISE INDICATED.
20. ALL OPENINGS RESULTING FROM THE CUTTING OR PARTIAL REMOVAL OF EXISTING CULVERTS, PIPES OR SIMILAR STRUCTURES SHALL BE SEALED WITH 8 INCHES OF BRICK AND MORTAR AND 6 INCHES OF CONCRETE, UNLESS OTHERWISE SHOWN.
21. AS-BUILT PLANS AND ASSET/ATTRIBUTE DATA SHALL BE SUBMITTED TO THE CITY PRIOR TO ACCEPTANCE OF IMPROVEMENTS.
22. AFTER BACKFILLING AND PRIOR TO STREET PAVING, AN INSPECTION OF SAID LINE BY VIDEO SHALL BE REQUIRED AT NO COST TO THE CITY. ALL NEW MAINLINE STORM DRAINS SHALL BE VIDEO INSPECTED PER THE PROVISIONS OF SECTION 500-1.1.5 OF THE STANDARD SPECIFICATIONS. THE RESULTS OF THE VIDEO INSPECTION SHALL BE RECORDED IN DVD FORMAT AND A COPY SHALL BE PROVIDED TO THE CITY AT NO COST. THE DEVELOPER OF THE PROJECT SHALL NOTIFY THE CITY OF LANCASTER IN WRITING AT LEAST 48 HOURS IN ADVANCE OF THE SCHEDULED DATE OF THE VIDEO INSPECTION.
23. ALL WORK SHALL COMPLY WITH THE CITY OF LANCASTER HOLIDAY MORATORIUM POLICY. NO EXCAVATION OR WORK SHALL OCCUR WITHIN THE PUBLIC RIGHT-OF-WAY ON PRIMARY ARTERIALS, SECONDARY ARTERIALS, AND COLLECTOR STREETS BETWEEN NOVEMBER 15TH TO JANUARY 2ND, EXCEPT WORK PERTAINING TO PUBLIC SAFETY OR WITH THE WRITTEN PERMISSION OF THE CITY MANAGER. WORK COMMENCED PRIOR TO THE RESTRICTION PERIOD MUST BE IN SUCH A CONDITION THAT IT WILL BE RESURFACED PRIOR TO NOVEMBER 15TH.

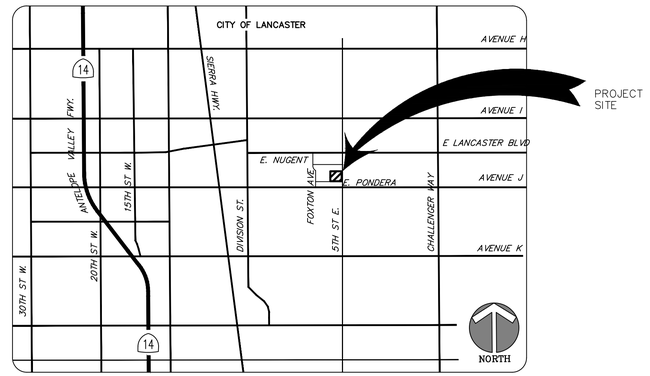

VICINITY MAP
N.T.S.

ABBREVIATIONS

AP	ASPHALT
AVE	AVENUE
BMP	BEST MANAGEMENT PRACTICE
BLDG	BUILDING
BLVD	BOULEVARD
BW	BACK OF WALK
CL	CENTER LINE
CO	CLEANOUT
COR	CORNER
DG	DECOMPOSED GRANITE
E	EAST
EP	EDGE OF PAVEMENT
FDC	FIRE DEPARTMENT CONNECTION
FF	FINISHED FLOOR
FL	FLOWLINE
FNC	FENCE
FS	FINISHED SURFACE
GV	GAS VALVE
HP	HIGH POINT
HWY	HIGH WAY
NTS	NOT TO SCALE
PL	PROPERTY LINE
SL	STREET LIGHT
ST	STREET
STRP	STRIPING
SW	SIDEWALK
TC	TOP OF CURB
TW	TOP OF WALL
W	WEST
WM	WATER METER
WV	WATER VALVE

DATE OF FIELD SURVEY:

JANUARY 30-FEBRUARY 7, 2023

BASIS OF BEARINGS:

THE BASIS OF BEARINGS FOR THIS SURVEY IS BASED ON THE BEARING BETWEEN CGPS STATION "F0XG" AND "RSTP" BEING NORTH 15°39'27" EAST PER POSITIONS/COORDINATES AS PUBLISHED BY THE CALIFORNIA SPATIAL REFERENCE CENTER (PER CSRC_EPOCH2017.50_TABLE1_FINAL_V5.XLXS), BASED ON THE CALIFORNIA COORDINATE SYSTEM OF 1983 (CCS83), ZONE V, NAD83 (2017.50 EPOCH).

BENCHMARK:

LA COUNTY BENCHMARK #: TL5678

NAVD88 ELEVATION: 2354.769' (PER LA COUNTY PUBLIC WORKS, LANCASTER QUAD, 2012 ADJUSTMENT)

DESCRIPTION: PLS TAG #5924 IN S CB 1FT E/O BCR @ SE COR AVE I & 5TH ST E 39.4FT S/O & 65.6FT E/O C/L INT

CHECKED BY: _____ DATE

UTILITY CONSTRUCTION NOTES

- (60) INSTALL 6" CPVC SCH. 40 STORM DRAIN AND FITTINGS
- (61) INSTALL 4" CPVC SCH. 40 STORM DRAIN AND FITTINGS
- (62) INSTALL ANGULAR DOWNSPOUT BOOT WITH CLEANOUT PER DETAIL ON SHT. C-520
- (63) INSTALL STORM DRAIN CLEANOUT PER SPPWC STD. 204-3 ON SHT. C-520
- (64) INSTALL 6" ATRIUM GRATE PER DETAIL ON SHT. C-520
- (65) INSTALL 4" ATRIUM GRATE PER DETAIL ON SHT. C-520
- (66) CONNECT TO EXISTING STORM DRAIN PIPE
- (70) REMOVE AND DISPOSE OF EXISTING CATCH BASIN
- (71) REMOVE AND DISPOSE OF EXISTING STORM DRAIN PIPE
- (80) INSTALL 2" PVC SCH. 40 WATER LINE AND FITTINGS
- (81) INSTALL 3" PVC SCH. 40 WATER LINE AND FITTINGS
- (82) CONNECT TO EXISTING WATER LINE
- (83) INSTALL 2" PVC SCH. 40 IRRIGATION WATER LINE AND FITTINGS
- (84) INSTALL 4" PVC SCH. 40 IRRIGATION WATER LINE AND FITTINGS
- (85) INSTALL 4" PVC SCH. 40 WATER LINE AND FITTINGS
- (86) INSTALL CONCRETE THRUST BLOCK PER LA COUNTY STD. W-21 ON SHT. C-520
- (87) TRENCH AND BACKFILL PER LA COUNTY STD. W-21 ON SHT. C-520
- (88) INSTALL 3/4" PVC SCH. 40 WATER LINE AND FITTINGS
- (89) REMOVE AND CAP EXISTING WATER LINE

COORDINATION NOTES

- (C) CURB DRAIN PER GRADING PLAN
- (E1) LIGHTING FIXTURE PER ELECTRICAL PLANS
- (E3) ELECTRICAL CONDUIT PER ELECTRICAL PLANS
- (L4) CONNECT TO DRINKING FOUNTAIN PER LANDSCAPE PLANS
- (P1) SEWER LATERAL PER PLUMBING PLANS
- (P2) SEE PLUMBING PLANS FOR WATER CONTINUATION

NOTES

CONTRACTOR SHALL NOTIFY ENGINEER WHERE NECESSARY ALL EXISTING UTILITY LINES AND UNDERGROUND STRUCTURES, WHETHER SHOWN OR NOT SHOWN ON THESE PLANS, THAT LAY WITHIN THE LIMIT OF THE NEW CONSTRUCTION, AND ARE NOT SPECIFICALLY MARKED TO BE REMOVED OR ABANDONED

CONTRACTOR TO VERIFY EXISITNG LOCATION, INVERT ELEVATION, AND SIZE OF THE EXISTING UILITY LINES AND NOTIFY THE OWNER'S FIELD REPRESENTATIVE IF ANY DISCREPANCIES ARE FOUND VERSUS THE APPROVED PLANS.

UTILITY SHEETS INDEX

C-500	TITLE SHEET
C-510	UTILITY PLAN
C-520	DETAILS

ARCH/ENG STAMP

REGISTERED PROFESSIONAL ENGINEER — BRUNT - ANDERSON — C 60955 — EXP. 12/31/26 — CIVIL — STATE OF CALIFORNIA

811 Know what's below. Call 811 before you dig.

PLANS PREPARED FOR THE CITY OF LANCASTER BY

IDS GROUP
1 PETERS CANYON ROAD, SUITE 130 IRVINE, CA 92606
TEL: 949-387-8500, FAX: 949-387-0800
IDS Project #: 220099-01

REVISIONS

REVISED BY (3) BULLETIN #1 DATE 10/25/24	REVISED BY (4) BULLETIN #1 DATE 02/14/25	COMPOSITE SET 9/24/25
APPROVED ____ DATE	APPROVED ____ DATE	REVISED BY ____ DATE
		APPROVED ____ DATE

CITY OF LANCASTER

SAMARITAN'S PURSE PARK RENOVATION

TITLE SHEET

VICINITY MAP

SEWER GENERAL NOTES

STORM DRAIN GENERAL NOTES

PWCP NO. 24-008 | C-500 | SHEET 1 OF 3 SHEETS

S:\PROJECTS\2022\SHARED\22X099.01 LANC – EL DORADO PARK\05 CAD\02 CIVIL\CD\22X099.01-C500-TITLE PLOT DATE: 2/14/2025 2:39:55 PM USER: GILL.IRADUKUNDA

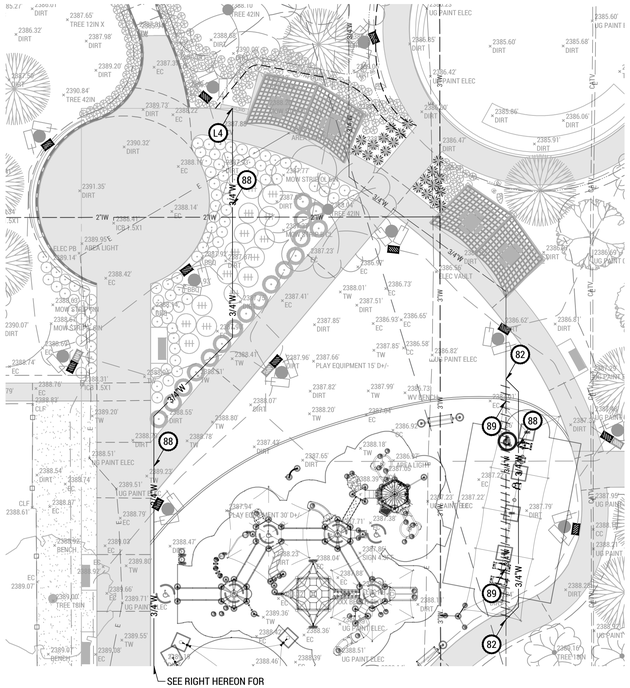

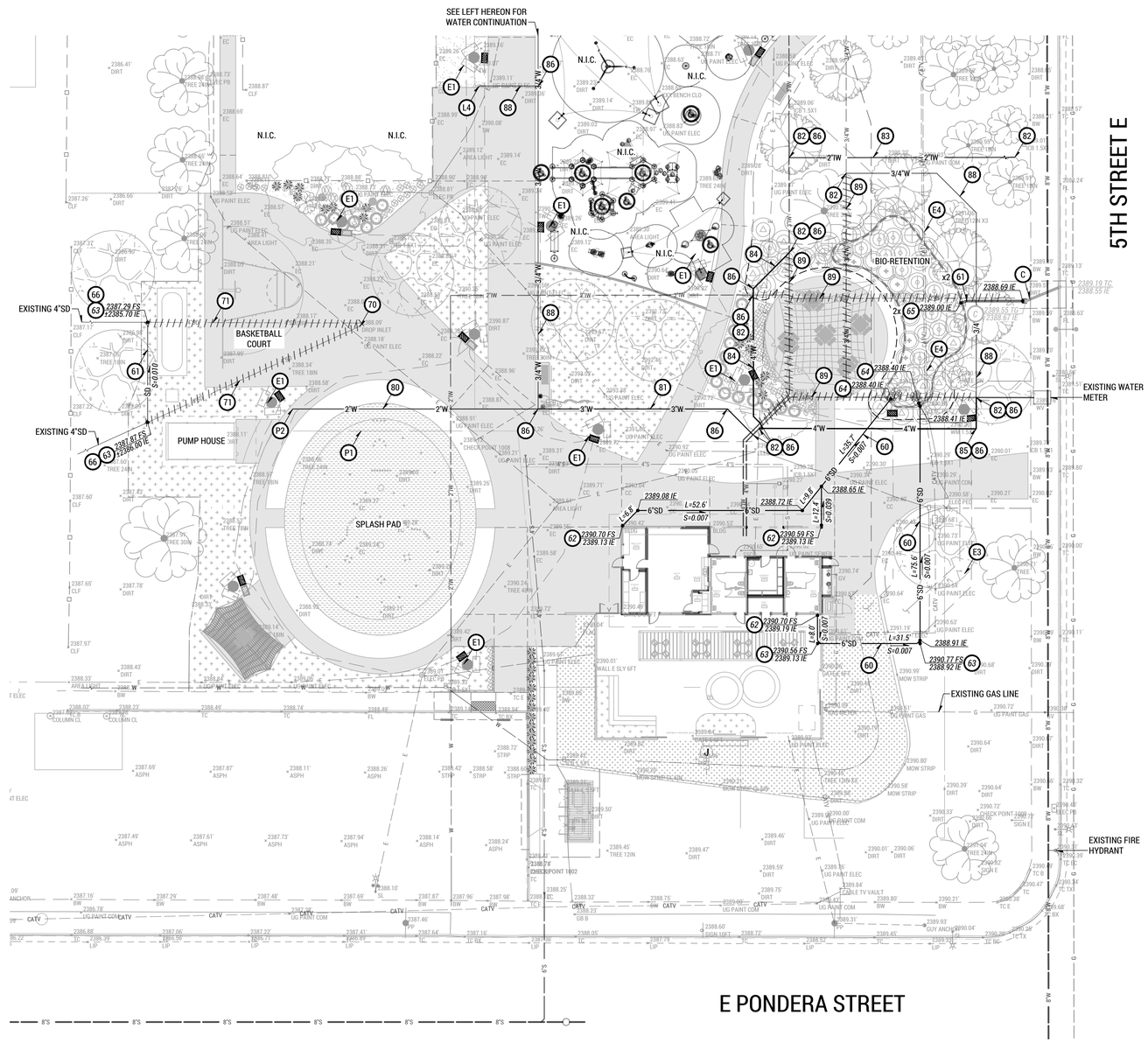

CHECKED BY:

DATE

UTILITY CONSTRUCTION NOTES

- 60 INSTALL 6" CPVC SCH. 40 STORM DRAIN AND FITTINGS
- 61 INSTALL 4" CPVC SCH. 40 STORM DRAIN AND FITTINGS
- 62 INSTALL ANGULAR DOWNSPOUT BOOT WITH CLEANOUT PER DETAIL ON SHT. C-520
- 63 INSTALL STORM DRAIN CLEANOUT PER SPPWC STD. 204-3 ON SHT. C-520
- 64 INSTALL 6" ATRIUM GRATE PER DETAIL ON SHT. C-520
- 65 INSTALL 4" ATRIUM GRATE PER DETAIL ON SHT. C-520
- 66 CONNECT TO EXISTING STORM DRAIN PIPE
- 70 REMOVE AND DISPOSE OF EXISTING CATCH BASIN
- 71 REMOVE AND DISPOSE OF EXISTING STORM DRAIN PIPE
- 80 INSTALL 2" PVC SCH. 40 WATER LINE AND FITTINGS
- 81 INSTALL 3" PVC SCH. 40 WATER LINE AND FITTINGS
- 82 CONNECT TO EXISTING WATER LINE
- 83 INSTALL 2" PVC SCH. 40 IRRIGATION WATER LINE AND FITTINGS
- 84 INSTALL 4" PVC SCH. 40 IRRIGATION WATER LINE AND FITTINGS
- 85 INSTALL 4" PVC SCH. 40 WATER LINE AND FITTINGS
- 86 INSTALL CONCRETE THRUST BLOCK PER LA COUNTY STD. W-21 ON SHT. C-520
- 87 TRENCH AND BACKFILL PER LA COUNTY STD. W-21 ON SHT. C-520
- 88 INSTALL 3/4" PVC SCH. 40 WATER LINE AND FITTINGS 4
- 89 REMOVE AND CAP EXISTING WATER LINE

COORDINATION NOTES

- C CURB DRAIN PER GRADING PLAN
- E1 LIGHTING FIXTURE PER ELECTRICAL PLANS
- E3 ELECTRICAL CONDUIT PER ELECTRICAL PLANS
- E4 RELOCATE UNDERGROUND CONDUIT PER ELECTRICAL PLANS
- L4 CONNECT TO DRINKING FOUNTAIN PER LANDSCAPE PLANS
- P1 SEWER LATERAL PER PLUMBING PLANS
- P2 SEE PLUMBING PLANS FOR WATER CONTINUATION

NOTES

CONTRACTOR SHALL NOTIFY ENGINEER WHERE NECESSARY ALL EXISTING UTILITY LINES AND UNDERGROUND STRUCTURES, WHETHER SHOWN OR NOT SHOWN ON THESE PLANS, THAT LAY WITHIN THE LIMIT OF THE NEW CONSTRUCTION, AND ARE NOT SPECIFICALLY MARKED TO BE REMOVED OR ABANDONED.

CONTRACTOR TO VERIFY EXISTING LOCATION, INVERT ELEVATION, PIPE MATERIAL, AND SIZE OF THE EXISTING UTILITY LINES AND NOTIFY THE OWNER'S FIELD REPRESENTATIVE IF ANY DISCREPANCIES ARE FOUND VERSUS THE APPROVED PLANS.

PROVIDE 2" OF CLEAN BACKFILL UNDER ALL PIPING.

20 SCALE 0 20 40

ARCH/ENG STAMP

REGISTERED PROFESSIONAL ENGINEER ADRIAN T. ANDERSON C 60955 EXP. 12/31/26 CIVIL STATE OF CALIFORNIA

811 Know what's below. Call 811 before you dig.

PLANS PREPARED FOR THE CITY OF LANCASTER BY

IDS GROUP

1 PETERS CANYON ROAD, SUITE 130 IRVINE, CA 92606
TEL: 949-387-8500, FAX: 949-387-0800
IDS Project #: 22X099.01

REVISIONS

REVISED BY 3 BULLETIN #1 DATE 10/25/24	REVISED BY 4 BULLETIN #1 DATE 02/14/25	COMPOSITE SET 9/24/25
APPROVED DATE	APPROVED DATE	REVISED BY DATE
		APPROVED DATE

CITY OF LANCASTER

SAMARITAN'S PURSE PARK RENOVATION

UTILITY PLAN

PWCP NO. 24-008 | C-510 | SHEET 2 OF 3 SHEETS

S:\PROJECTS\2022\SHARED\22X099.01 LANC – EL DORADO PARK\05 CAD\02 CIVIL\CD\22X099.01-C510-UTIL PLOT DATE: 2/14/2025 2:52:36 PM USER: GILL.IRADUKUNDA

DOWNSPOUTBOOTS.com
A DIVISION OF J.R. HOE
1-800-245-5521

Cast Iron Downspout Boot Options

Square & Rectangular Top Bell Sizes

Top Bell	Outlet OD	Available Lengths
3" x 4"	4 1/4", 4 7/8"	16", 20", 24", 28", 32", 36", 40", 44", 48", 52", 56", 60", 64", 68", 72", 76", 80"
3" x 5"	4 1/4", 4 7/8"	
4" x 4"	4 1/4", 4 7/8"	
4" x 5"	4 7/8", 5 7/8"	
4" x 6"	4 7/8", 5 7/8"	
5" x 5"	4 7/8", 5 7/8"	
5" x 6"	5 7/8", 6 7/8"	
5" x 7"	5 7/8", 6 7/8"	
6" x 6"	5 7/8", 6 7/8"	
6" x 8"	5 7/8", 7 1/4"	24", 30", 36", 42", 48", 54", 60", 66", 72", 78", 84"
8" x 8"	8 1/4"	

Round Top Bell Sizes

Top Bell	Outlet OD	Available Lengths
3" Round	4 1/4", 4 7/8"	16", 20", 24", 28", 32", 36", 40", 44", 48", 52", 56", 60", 64", 68", 72", 76", 80"
4" Round	4 1/4", 4 7/8"	
5" Round	4 7/8", 5 7/8"	
6" Round	5 7/8", 6 7/8"	
8" Round	8 1/4"	24", 30", 36", 42", 48", 54", 60", 66", 72", 78", 84"

Product drawings for all downspout boot sizes are available at www.downspoutboots.com. Cleanout option available for all sizes 24" or greater in length.

Coating Options

No Coating
Plain cast iron finish

Primer Coating
Light gray rust inhibitive primer

Powder Coating
To view color options, please visit downspoutboots.comlcolorchart.php

Accessories

Rubber Couplings
Flexible couplings for durability and ease of installation

Mounting Hardware
For concrete, masonry or brick building walls

Our most popular sizes are in stock and ready to ship!

www.downspoutboots.com

NTS

DOWNSPOUT BOOT 62

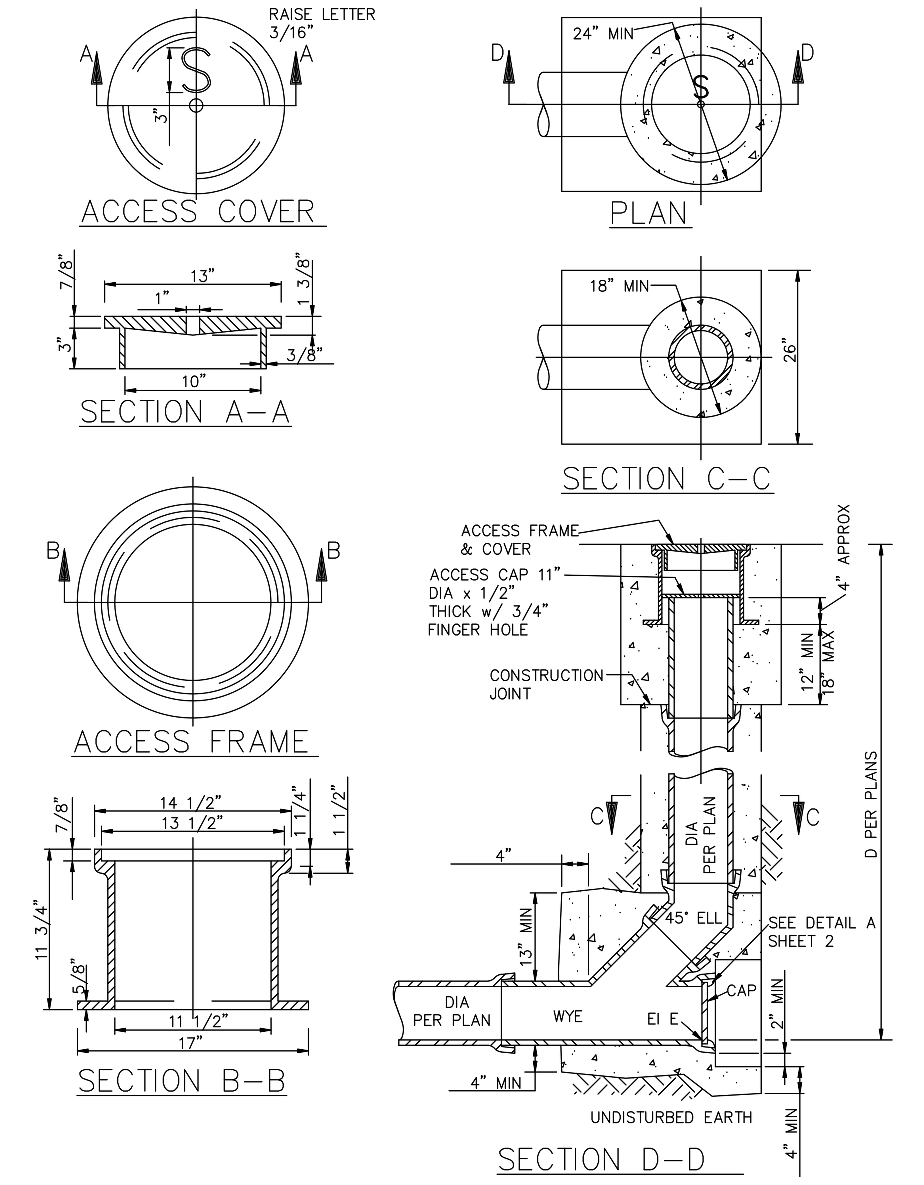

STANDARD PLANS FOR PUBLIC WORKS CONSTRUCTION

PROMULGATED BY THE PUBLIC WORKS STANDARDS INC. GREENBOOK COMMITTEE 1993 REV. 2005, 2009, 2021

TERMINAL CLEANOUT STRUCTURE

USE WITH STANDARD SPECIFICATIONS FOR PUBLIC WORKS CONSTRUCTION

STANDARD PLAN 204–3 SHEET 1 OF 2

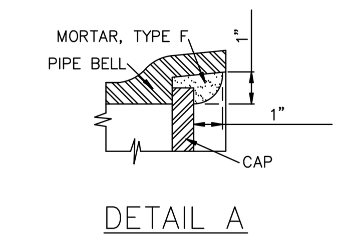

NOTES:

1. VALUES OF DIMENSION D AND ELEVATION E SHALL BE AS SHOWN ON THE PLANS.
2. PIPE AND FITTINGS, UNLESS OTHERWISE NOTED, SHALL BE OF THE SAME MATERIALS AS THE SEWER, UNLESS APPROVED ADAPTORS ARE USED, AND MAY BE ANY OF THE FOLLOWING:
   A. CPVC PIPE
   B. PE PIPE
   C. ABS SOLID WALL PIPE
   D. ABS COMPOSITE PIPE
   E. PVC PLASTIC PIPE
3. PIPE AND FITTINGS SHALL BE BEDDED AND ENCASED IN CONCRETE AS SHOWN. CONCRETE SHALL BE CLASS 450–C–2000 (265–C–14). JOIN AND ALIGN PIPE AND FITTINGS BEFORE PLACING CONCRETE. MAINTAIN ALIGNMENT WHILE PLACING AND ALLOWING CONCRETE TO SET.
4. THE ACCESS FRAME, COVER AND CAP SHALL BE CAST IRON. FINGER HOLES MAY BE DRILLED OR BLOCKED OUT PRIOR TO CASTING. FINGER HOLES SHALL NOT BE PUNCHED OUT.
5. THE CONTRACTOR MAY PLACE EITHER CIRCULAR OR SQUARE CONCRETE PIPE WALL SUPPORTS.

STANDARD PLANS FOR PUBLIC WORKS CONSTRUCTION

TERMINAL CLEANOUT STRUCTURE

STANDARD PLAN 204–3 SHEET 2 OF 2

NTS

CLEANOUT 41, 63

NDS

GRATES: STANDARD, DECORATIVE & METAL

Atrium Grates

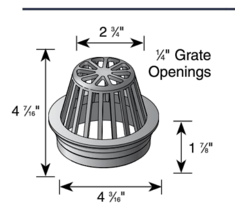

Part No.	Description	Color	Pkg. Qty.	Wt. Ea. lbs.	Product Class	Specifications
75	4" Atrium Grate	Green	20	0.21	10ND	Flat-Top Structural Foam Polyolefin Atrium Grate with UV inhibitor. Open surface area 17.00 square inches. 52.01 GPM.
76	4" Atrium Grate	Gray	20	0.21	10ND	
78	4" Atrium Grate	Black	20	0.21	10ND	
78S	4" Atrium Grate	Sand	20	0.21	10ND	
	Fits 4" Sewer and Drain Pipe & Fittings, 4" Corrugated Pipe, and 4" Triple Wall Pipe.					

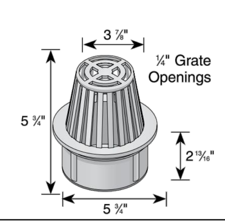

Part No.	Description	Color	Pkg. Qty.	Wt. Ea. lbs.	Product Class	Specifications
80	6" Atrium Grate	Green	10	0.62	10ND	Flat-Top Structural Foam Polyolefin Atrium Grate with UV inhibitor. Open surface area 28.40 square inches. 86.88 GPM.
81	6" Atrium Grate	Gray	10	0.62	10ND	
90	6" Atrium Grate	Black	10	0.62	10ND	
90S	6" Atrium Grate	Sand	10	0.62	10ND	
	Fits Spee-D® Basin, 6" Sewer and Drain Pipe & Fittings, 6" Corrugated Pipe.					

NTS

ATRIUM GRATE 64, 65

CONCRETE THRUST BLOCKS

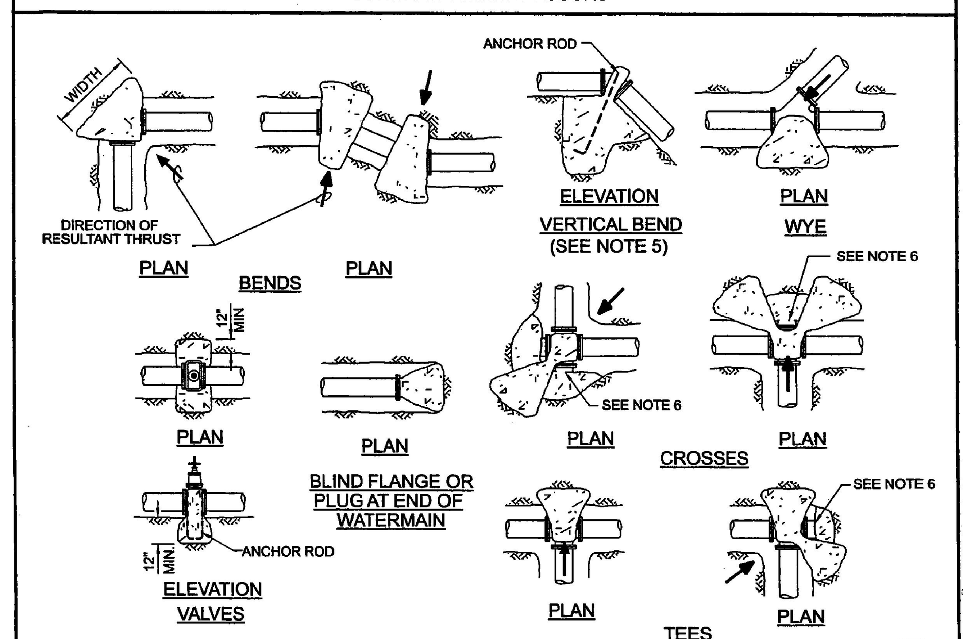

TABLE I

MINIMUM BEARING AREAS IN SQ FT *				
MAIN SIZE	TEE **	90° BEND	45° BEND	22 1/2° BEND
2"- 6"	4	4	4	3
8"	5	7	4	3
10"	9	12	6	4
12"	12	16	9	6

* BASED ON 150 PSI WWP PRESSURE & SOIL BEARING LOADS OF 2000 PSF. THE RATIO OF WIDTH TO HEIGHT SHALL NOT EXCEED 1 1/2 TO 1.
** TEES, PLUGS, CAPS, AND HYDRANTS.

TABLE II

*** SOIL TYPE	**** MAX ALLOWABLE SOIL BEARING VALUES	FACTORS FOR INCREASING AREAS IN TABLE 1
LOOSE SAND	500 PSF	4
SOFT SANDY CLAY	1000 PSF	2
ADOBE	1000 PSF	2
COMPACT FINE SAND	2000 PSF	1
COMPACT COARSE SAND	2000 PSF	1
MEDIUM STIFF CLAY	2000 PSF	1

*** THE CONTRACTOR SHALL BE RESPONSIBLE FOR DETERMINING THE SAFE SOIL BEARING VALUES AND THE POSITION AND SIZE OF BEARING AREAS.
**** BASED ON 2 FEET MINIMUM DEPTH OF COVER OVER THE PIPE.

GENERAL NOTES:

1. ALL ANCHOR AND THRUST BLOCKS SHALL BEAR AGAINST UNDISTURBED SOIL.
2. MINIMUM ALLOWABLE WATER PRESSURE FOR DESIGN OF THRUST BLOCKS IS 150 PSI. BEARING AREA INCREASES DIRECTLY WITH INCREASE IN PRESSURE.
3. ALL CONCRETE USED IN THRUST BLOCKS SHALL ATTAIN 2000 PSI STRENGTH.
4. ALL ANCHOR RODS SHALL BE REINFORCING STEEL AND A MINIMUM OF 1/2 INCH IN DIAMETER.
5. USE ANCHOR BLOCKS AT VERTICAL BENDS WHEN PIPE IS ABOVE OR BELOW GROUND. SIZE OF BLOCK AND ROD SHALL BE AS SHOWN ON THE PLANS OR AS DETERMINED BY THE DISTRICT.
6. USE 30 POUND FELT TO INSURE COLD JOINT.
7. CONCRETE SHALL NOT COME INTO DIRECT CONTACT WITH ASBESTOS-CEMENT PIPE.
8. FOR PIPE GREATER THAN 12" IN DIAMETER, ENGINEER IS TO SUBMIT CALCULATIONS FOR APPROVAL.

LOS ANGELES COUNTY WATERWORKS DISTRICTS

DEPARTMENT OF PUBLIC WORKS

APPROVED ASSISTANT DEPUTY DIRECTOR APRIL 2004 DATE

STANDARD PLAN W-21 SHEET 1 OF 1

NTS

CONCRETE THRUST BLOCK 86

PIPE TRENCH

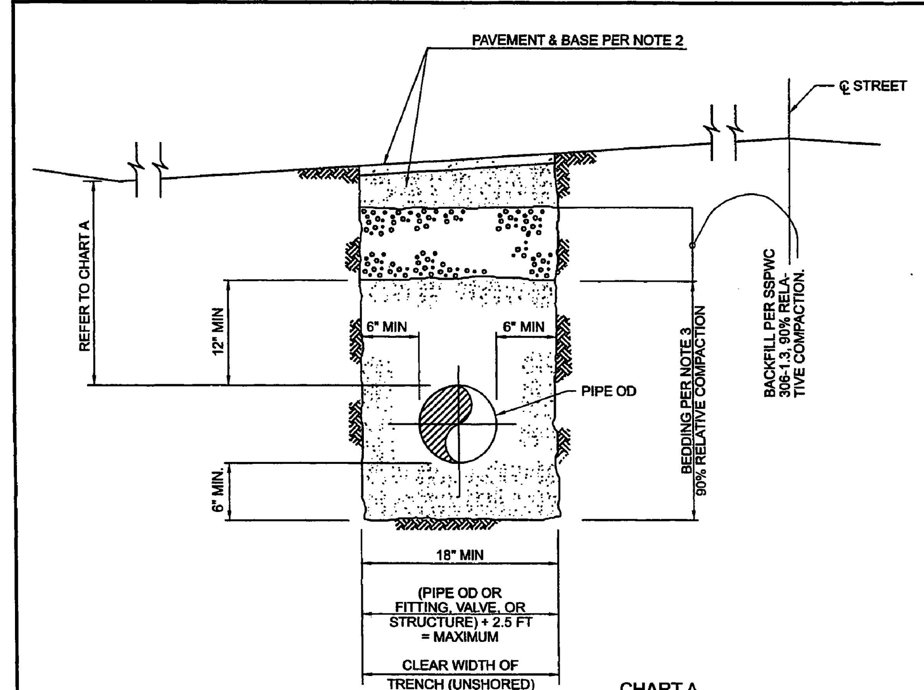

CHART A

SIZE OF PIPE (INCHES)	MIN DEPTH OF COVER OVER PIPE IN INCHES (SEE NOTE 1).	MIN DEPTH OF COVER OVER PIPE IN PRIVATE STREET (SEE NOTE 1).
4 TO 6	36	36
8 TO 10	42	48
12 OR LARGER	48	48

GENERAL NOTES:

1. THE DEPTH OF COVER OVER THE PIPE SHALL BE MEASURED VERTICALLY FROM THE TOP OF THE PIPE WITH REFERENCE TO AN APPROVED, IMPROVED GUTTER FLOWLINE. WHERE THERE IS NO IMPROVED GUTTER FLOWLINE, USE THE ELEVATION OF A PROPOSED ADJACENT FLOWLINE AS THE REFERENCE ELEVATION.
2. PAVEMENT SHALL BE PER THE REQUIREMENTS OF THE LOCAL AGENCY'S PERMIT BUT NOT LESS THAN THE REQUIREMENTS OF STANDARD PLAN 132-1 FOR PCC PAVEMENT OR STANDARD PLAN 133-1 FOR AC PAVEMENT.
3. BEDDING SHALL BE SAND PER SSPWC 306-1.2.1 UNLESS OTHERWISE APPROVED BY THE DISTRICT.
4. NEITHER BEDDING NOR BACKFILL SHALL CONTAIN PARTICLES GREATER THAN ONE SQUARE INCH.

NTS

LOS ANGELES COUNTY WATERWORKS DISTRICTS

DEPARTMENT OF PUBLIC WORKS

APPROVED ASSISTANT DEPUTY DIRECTOR APRIL 2004 DATE

STANDARD PLAN W-46 SHEET 1 OF 1

NTS

TRENCH AND BACKFILL 87

CHECKED BY: DATE

ARCH/ENG STAMP
REGISTERED PROFESSIONAL ENGINEER ADRIAN T. ANDERSON C 60955 EXP. 12/31/26 CIVIL STATE OF CALIFORNIA

811 Know what's below. Call 811 before you dig.

PLANS PREPARED FOR THE CITY OF LANCASTER BY
IDS
IDS GROUP
1 PETERS CANYON ROAD, SUITE 130 IRVINE, CA 92606
TEL: 949-387-8500, FAX: 949-387-0800
IDS Project #: 22X099.01

REVISIONS

REVISED BY 3 BULLETIN #1 DATE 10/25/24	REVISED BY 4 BULLETIN #1 DATE 02/14/25	COMPOSITE SET 9/24/25 REVISED BY DATE
APPROVED DATE	APPROVED DATE	APPROVED DATE

CITY OF LANCASTER

SAMARITAN'S PURSE PARK RENOVATION

DETAILS

PWCP NO. 24–008 | C–520 | SHEET 3 OF 3 SHEETS

S:\PROJECTS\2022\SHARED\22X099.01 LANC – EL DORADO PARK\05 CAD\02 CIVIL\CD\22X099.01–C520–DETL PLOT DATE: 2/14/2025 2:40:09 PM USER: GILL.IRADUKUNDA

ABBREVIATIONS

⌒	ALIGN
ABR.	ABBREVIATION
A.C.	ASPHALTIC CONCRETE
@	AT
BTH	BARE TRUNK HEIGHT
B/W	BOTH WAYS
BLDG.	BUILDING
CONC.	CONCRETE
CMU	CONCRETE MASONRY UNIT
CONT.	CONTINUOUS
DIA.	DIAMETER
D.G.	DECOMPOSED GRANITE
EA.	EACH
ELEV.	ELEVATION
EX.	EXISTING
GAL.	GALLON
GALV.	GALVANIZED
HORIZ.	HORIZONTAL
MAX.	MAXIMUM
MIN.	MINIMUM
N.A.P.	NOT A PART
O.C.	ON CENTER
P.A.	PLANTING AREA
P.O.B.	POINT OF BEGINNING
PVC	POLYVINYL CHLORIDE
P.T.D.F.	PRESSURE TREATED DOUG FIR
QTY.	QUANTITY
RAD	RADIUS
RDWD	REDWOOD
REQ.	REQUIRED
SIM	SIMILAR TO
SPECS	SPECIFICATIONS
SQ.	SQUARE
STD.	STANDARD
SYM.	SYMBOL
T.B.S.	TO BE SELECTED
TYP.	TYPICAL
U.N.O.	UNLESS NOTED OTHERWISE
VAR.	VARIES
VERT.	VERTICAL
WWM	WELDED WIRE MESH

LANDSCAPE & IRRIGATION GENERAL NOTES

1. ALL WORK SHALL CONFORM TO:
   a. THE CURRENT STANDARD SPECIFICATIONS FOR PUBLIC WORKS CONSTRUCTION AND ALL "STANDARD PLANS" AND "SPECIAL PROVISIONS" REFERENCED
   b. ALL SECTIONS OF THE CURRENT LANCASTER LANDSCAPE AND IRRIGATION DESIGN STANDARDS, PART B IRRIGATION AND LANDSCAPING MATERIALS AND INSTALLATION
   c. THE LANCASTER WATER EFFICIENT LANDSCAPE ORDINANCE NO. 907
2. PERMITS, RIGHT-OF-ENTRY, DEDICATIONS, TRESPASSING AND EXTENSIONS:
   a. A PRECONSTRUCTION MEETING WITH THE CITY PUBLIC WORKS INSPECTOR IS REQUIRED PRIOR TO START OF WORK.
   b. APPROVAL OF PLANS AND / OR PERMIT ISSUANCE DOES NOT RELIEVE THE PERMITTEE OF THEIR RESPONSIBILITY TO MAINTAIN WORK WITHIN THE PROJECT PROPERTY BOUNDARIES AND DEDICATED CITY RIGHT-OF-WAY. TRESPASSING ON PRIVATE PROPERTY IS AGAINST THE LAW AND CAUSE FOR CANCELLATION OF PERMIT AND ISSUANCE OF STOP WORK NOTICE.
   c. IT IS THE RESPONSIBILITY OF THE PERMITTEE TO SUBMIT A REQUEST FOR PERMIT EXTENSION TO THE SENIOR DIRECTOR - DEVELOPMENT SERVICES IN WRITING PRIOR TO PERMIT EXPIRATION. EXTENSION AND EXPIRATION OF PERMITS SHALL BE IN ACCORDANCE WITH THE UNIFORM BUILDING CODE AND /OR THE CITY OF LANCASTER ENGINEERING DESIGN GUIDELINES POLICIES AND PROCEDURES.
   d. ALL WORK SHALL BE PERFORMED BY A LICENSED LANDSCAPE CONTRACTOR.
3. NO SLOPE IN PLANTER AREAS SHALL EXCEED 5:1 OR 20%. MINIMUM GRADE WITHIN LANDSCAPED AREAS SHALL BE 2%.
4. LANDSCAPED AREAS SHALL BE IRRIGATED BY AN AUTOMATIC SYSTEM WITH SEPARATE STATIONS FOR EACH HYDROZONE; PLANT GROUPINGS MUST BE INSTALLED BY HYDROZONE.
5. IRRIGATION SYSTEMS SHALL BE EQUIPPED WITH SMART CONTROLLERS PER SPECS PLAN.
6. DUST SHALL BE CONTROLLED AS SPECIFIED IN THE DUST CONTROL METHOD LETTER, AVAQMD APPROVED PLANS AND/OR BY WATERING TO THE SATISFACTION OF THE SENIOR DIRECTOR - DEVELOPMENT SERVICES.
7. THE CONTRACTOR'S ATTENTION IS DIRECTED TO PART B, SECTION A.10 OF THE LANCASTER LANDSCAPE AND IRRIGATION DESIGN STANDARDS IN REGARDS TO CONTRACTOR RESPONSIBILITIES:
   a. IT IS THE RESPONSIBILITY OF THE CONTRACTOR TO FAMILIARIZE HIMSELF WITH ALL GRADE DIFFERENCES, LOCATION THE CONTRACTOR SHALL REPAIR OR REPLACE ALL ITEMS DAMAGED BY ITS WORK. OF WALLS, AND UTILITIES. CONTRACTOR SHALL COORDINATE ITS WORK WITH OTHER CONTRACTORS FOR THE LOCATION AND INSTALLATION OF PIPE SLEEVES AND LATERALS UNDER ROADWAYS AND PAVING, ETC.
   b. CONTRACTOR SHALL BE RESPONSIBLE FOR LOCATING AND STAKING ALL SEWER, UTILITY, AND WATER MAIN LINES PRIOR TO BEGINNING WORK. CONTRACTOR SHALL BE RESPONSIBLE FOR ANY DAMAGE OR REPLACEMENT OF SAID UTILITIES. ANY DIGGING IN AREAS WHERE PUBLIC TYPE UTILITY SUBSTRUCTURES MAY EXIST REQUIRES AN UNDERGROUND SERVICE ALERT (USA). THE ALERT MUST BE OBTAINED AT LEAST FORTY-EIGHT (48) HOURS PRIOR TO DIGGING. USA'S TELEPHONE NUMBER IS (800) 422-4133. THIS WILL ALLOW SUCH UTILITIES TO MARK THEIR FACILITIES TO MINIMIZE INTERFERENCE AND DISRUPTION OF SERVICE.
   c. CONTRACTOR SHALL NOT WILLFULLY INSTALL THE IRRIGATION SYSTEM AS SHOWN ON THE DRAWINGS WHEN IT IS OBVIOUS IN THE FIELD THAT UNKNOWN OBSTRUCTIONS, GRADE DIFFERENCES, OR DIFFERENCES IN THE AREA DIMENSIONS EXIST THAT MIGHT NOT HAVE BEEN CONSIDERED IN THE ENGINEERING. SUCH OBSTRUCTIONS OR DIFFERENCES SHOULD BE BROUGHT TO THE ATTENTION OF THE OWNER. IN THE EVENT THIS NOTIFICATION IS NOT PERFORMED, THE CONTRACTOR SHALL ASSUME FULL RESPONSIBILITY FOR ANY REVISIONS NECESSARY.
   d. THE INTENT OF THE DESIGN IS TO PROVIDE ADEQUATE WATER COVERAGE TO PLANT MATERIAL TO INSURE SURVIVAL. AS PART OF THE SCOPE OF WORK, CONTRACTOR SHALL PROVIDE ANY ADDITIONAL HEADS, SPECIAL NOZZLES, OR PATTERNS TO ACHIEVE PROPER COVERAGE WITH A MINIMUM OF OVERSPRAY, AT NO ADDITIONAL COST TO THE OWNER.
   e. AFTER ALL NEW SPRINKLER PIPELINES AND RISERS ARE IN PLACE AND CONNECTED, ALL NECESSARY DIVERSION HAS BEEN COMPLETED, AND PRIOR TO INSTALLATION OF SPRINKLER HEADS, THE CONTROL VALVES SHALL BE OPENED AND A FULL HEAD OF WATER USED TO FLUSH OUT THE SYSTEM.
8. ALL PLANT MATERIALS SHALL BE FROM THE APPROVED LANCASTER PLANT LIST OR CITY APPROVED EXCEPTION.
9. ASPECTS OF THE EXISTING IRRIGATION SYSTEM IS TO BE PRESERVED IN PLACE AND MODIFIED AS SHOWN IN THESE PLANS, SPECIFICATIONS.
10. EXISTING IRRIGATION SYSTEM COMPONENTS WHICH ARE IDENTIFIED AS PRESERVED IN PLACE ARE TO BE TESTED FOR INTEGRITY & PERFORMANCE.. IF DEEMED TO BE FAULTY THEY ARE TO BE REPLACED PER ALLOWANCE BID ITEM.
11. A TEMPORARY IRRIGATION SYSTEM IS TO BE INSTALLED DURING CONSTRUCTION TO CONTROL EXISTING VALVES AND SERVE THE EXISTING LANDSCAPE. THIS TEMPORARY SYSTEM IS DEFINED IN THE PLANS AND SPECIFICATIONS AND PAID FOR BY ALLOWANCE IN THE BID.
12. WATER WASTING RESULTING FROM INEFFICIENT LANDSCAPE IRRIGATION, SUCH AS RUNOFF, LOW HEAD DRAINAGE, OVERSPRAY, ETC., IS PROHIBITED. SIMILAR CONDITIONS WHERE WATER FLOWS ONTO NON-TARGETED AREAS, SUCH AS ADJACENT PROPERTY, NON-IRRIGATED AREAS, HARDSCAPES, ROADWAYS, OR STRUCTURES ARE ALSO PROHIBITED.
13. AS-BUILT PLANS AND ASSET/ATTRIBUTE DATE SHALL BE SUBMITTED TO THE CITY PRIOR TO ACCEPTANCE OF IMPROVEMENTS.
14. ALL REVISIONS TO PLANS, OR MATERIAL SUBSTITUTION REQUESTS, PROPOSED DURING CONSTRUCTION SHALL BE SUBMITTED IN WRITING TO THE CAPITAL ENGINEERING DIVISION AND SHALL FOLLOW THE PROCEDURES FOR APPROVAL OUTLINED IN THE MOST CURRENT CITY OF LANCASTER ENGINEERING DESIGN GUIDELINES.
15. CONTRACTOR SHALL SUBMIT ALL IRRIGATION AND MAINTENANCE SCHEDULES, GUARANTEE STATEMENTS, COMPLETE OPERATING MAINTENANCE INSTRUCTIONS ON ALL MAJOR EQUIPMENT AND PROVIDE CITY LANDSCAPE MAINTENANCE PERSONNEL WITH INSTRUCTIONS FOR MAJOR EQUIPMENT UPON COMPLETION OF THE ONE YEAR WARRANTY/MAINTENANCE PERIOD.

COMPLIANCE STATEMENT

I, JOY LYNDES, AM FAMILIAR WITH THE REQUIREMENTS FOR LANDSCAPE AND IRRIGATION PLANS CONTAINED IN THE CITY OF LANCASTER CHAPTER 8.50 LANDSCAPING INSTALLATION AND MAINTENANCE CODE OF REGULATORY ORDINANCES. I HAVE PREPARED THIS PLAN IN COMPLIANCE WITH THOSE REGULATIONS. I CERTIFY THAT THE PLAN IMPLEMENTS THOSE REGULATIONS TO PROVIDE EFFICIENT USE OF WATER.

Signature _____ 2/26/2024
Date

SHEET INDEX

1.	LT-001	LANDSCAPE TITLE SHEET
2.	LD-101	LANDSCAPE DEMO PLAN
3.	LPPI-101	LANDSCAPE PRESERVATION - PLANT & IRRIGATION PLAN & NOTES
4.	LH-101	LANDSCAPE HARDSCAPE PLAN & DETAILS AESTHETICS
5.	LC-102	LANDSCAPE CONSTRUCTION PLAN - SITE FURNITURE, DF.
6.	LC-401	LANDSCAPE CONSTRUCTION MATERIALS SCHEDULE
7.	LC-503	CONSTRUCTION DETAILS
8.	LC-504	FURNITURE DETAILS
9.	LC-505	ADULT FITNESS STATIONS
10.	LI-101	IRRIGATION PLAN PART 1
11.	LI-102	IRRIGATION PLAN PART 2
12.	LI-103	IRRIGATION PLAN PART 3
13.	LI-104	IRRIGATION PLAN PART 4
14.	LI-105	IRRIGATION PLAN PART 5
15.	LI-502	IRRIGATION DETAILS
16.	LI-503	IRRIGATION DETAILS
17.	LI-504	IRRIGATION DETAILS
18.	LI-601	IRRIGATION SCHEDULE
19.	LP-101	PLANTING PLAN PART 1
20.	LP-102	PLANTING PLAN PART 2
21.	LP-103	PLANTING PLAN PART 3
22.	LP-104	PLANTING PLAN PART 4
23.	LP-501	PLANTING DETAILS

APPROVAL

CITY APPROVED BY:
DIRECTOR OF PUBLIC WORKS — DATE
CITY REVIEWED BY:
SENIOR ENGINEER — DATE
SUBMITTED BY:
DATE

CLIENT
LANCASTER
Creating a better tomorrow. Together.
CITY OF LANCASTER
44933 FERN AVENUE
LANCASTER, CA 93534

PROJECT NAME
SAMARITAN'S PURSE PARK FORMERLY KNOWN AS EL DORADO PARK RENOVATION
PWCP NO. 24-008
44501 5th STREET EAST
LANCASTER, CA 93535

ENGINEER/ARCHITECT
IDS
IDS GROUP
1 PETERS CANYON ROAD, SUITE 130
IRVINE, CA. 92606
TEL: 949-387-8500, FAX: 949-387-0800

STAMP
LICENSED LANDSCAPE ARCHITECT
JOY LYNDES
02-26-2024
STATE OF CALIFORNIA

ISSUE

REV.	DESCRIPTION	DATE
	30% CD SET	12/15/23
	60% CD SET	01/19/24
	90% CD SET	02/26/24
1	CLIENT REVISION	04/26/24
2	BID SET	09/10/24

PROJECT IDENTIFICATION

THIS DRAWING WAS CREATED IN AUTODESK AUTOCAD V. 2021 UNLESS OTHERWISE NOTED.

THE ORIGINAL SIZE OF THIS SHEET IS 30" X 42"

THESE DRAWINGS AND SPECIFICATIONS ARE THE PROPERTY AND COPYRIGHT OF IDS GROUP AND SHALL NOT BE USED ON ANY OTHER PROJECT OR LOCATIONS EXCEPT AS DESCRIBED ON THE DRAWINGS, WITHOUT THE WRITTEN AGREEMENT WITH IDS GROUP.

IDS PROJECT NO.	22X099.01
IDS DRAWN BY	KG
IDS CHECKED BY	JL
IDS APPROVED BY	JL

SHEET TITLE
LANDSCAPE TITLE SHEET

SHEET NUMBER
LT-001

SHEET NO. 1 OF 23

CUMULATIVE SHEET NO. OF

PROGRESS SET - NOT FOR CONSTRUCTION

IDS GROUP - FILE LOCATION: \\IDS-FS1\SHARED\PROJECTS\2022\SHARED\22X099.01 LANC - EL DORADO PARK\05 CAD\11 LANDSCAPE\COURTYARD DESIGN\LT-001 LANDSCAPE TITLE SHEET (GENERAL NOTES, ABBREVIATIONS, ...) PLOT DATE: 9/12/2024 10:27:24 AM USER: KRISTEN.GROS

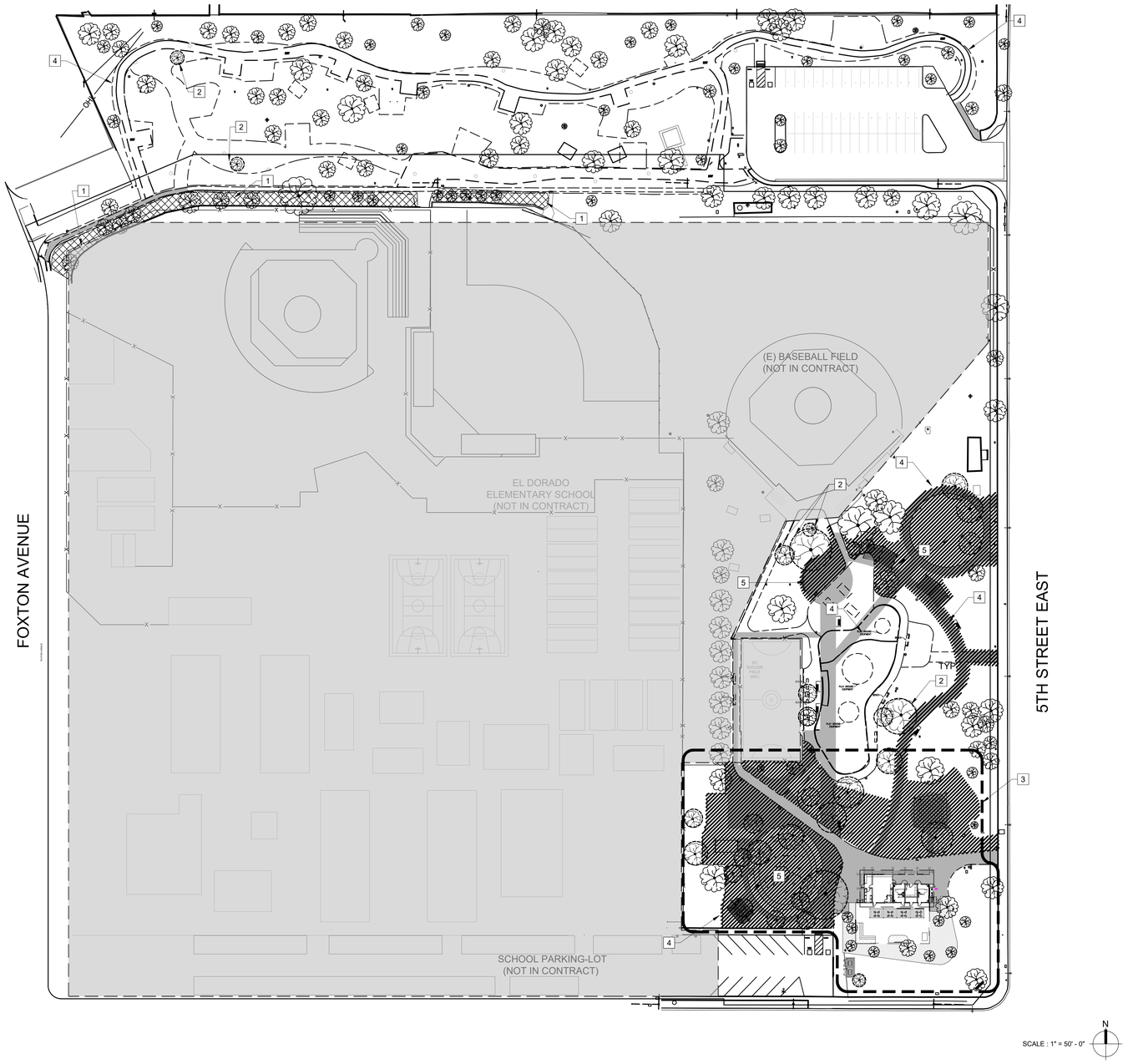

SCALE : 1" = 50' - 0"

N

KEYNOTES

1. EXISTING SHRUBS TO BE REMOVED.
2. EXISTING TREE TO BE REMOVED.
3. EXISTING IRRIGATION TO BE REMOVED IN THIS AREA
   - VALVES B,C,D,E
   - MAINLINE LATERAL
   - QUICK COUPLER
   - NEW TEMPORARY IRRIGATION TO BE INSTALLED
4. LIMIT OF GRADING, PER CIVIL PLANS
5. EXISTING TURF TO BE REMOVED

NOTE:
THIS PLAN IS JUST FOR IDENTIFICATION OF PLANTS & IRRIGATION TO BE REMOVED.

TREE REMOVAL SCHEDULE

SYM.	DESCRIPTION	QTY.
	TREES TO BE REMOVED	33

TREES LEGEND

- EXISTING TREES TO REMAIN
- TREES TO BE REMOVED
- TURF TO BE REMOVED

APPROVAL

CITY APPROVED BY:

DIRECTOR OF PUBLIC WORKS — DATE

CITY REVIEWED BY:

SENIOR ENGINEER — DATE

SUBMITTED BY:

DATE

CLIENT

LANCASTER
Creating a better tomorrow. Together.

CITY OF LANCASTER

44933 FERN AVENUE
LANCASTER, CA 93534

PROJECT NAME

SAMARITAN'S PURSE PARK
FORMERLY KNOWN AS
EL DORADO PARK
RENOVATION

PWCP NO. 24-008

44501 5th STREET EAST
LANCASTER, CA 93535

ENGINEER/ARCHITECT

IDS

IDS GROUP

1 PETERS CANYON ROAD, SUITE 130
IRVINE, CA. 92606
TEL: 949-387-8500, FAX: 949-387-0800

STAMP

LICENSED LANDSCAPE ARCHITECT
JAMES LYNDES LOGAN
08-31-2023
02-26-2024
STATE OF CALIFORNIA

ISSUE

REV.	DESCRIPTION	DATE
	30% CD SET	12/15/23
	60% CD SET	01/19/24
	90% CD SET	02/26/24
1	CLIENT REVISION	04/26/24
2	BID SET	09/10/24

PROJECT IDENTIFICATION

THIS DRAWING WAS CREATED IN AUTODESK AUTOCAD V. 2021 UNLESS OTHERWISE NOTED.

THE ORIGINAL SIZE OF THIS SHEET IS 30" X 42"

THESE DRAWINGS AND SPECIFICATIONS ARE THE PROPERTY AND COPYRIGHT OF IDS GROUP AND SHALL NOT BE USED ON ANY OTHER PROJECT OR LOCATIONS EXCEPT AS DESCRIBED ON THE DRAWINGS, WITHOUT THE WRITTEN AGREEMENT WITH IDS GROUP.

IDS PROJECT NO.	22X099.01
IDS DRAWN BY	KG
IDS CHECKED BY	JL
IDS APPROVED BY	JL

SHEET TITLE

LANDSCAPE DEMOLITION PLAN

SHEET NUMBER

LD-101

SHEET NO. 2 OF 23

CUMULATIVE SHEET NO. OF

PROGRESS SET - NOT FOR CONSTRUCTION

IDS GROUP - FILE LOCATION: \\IDS-FS1\SHARED\PROJECTS\2022\SHARED\22X099.01 LANC - EL DORADO PARK\05 CAD\11 LANDSCAPE\COURTYARD DESIGN\LD-101 LANDSCAPE DEMO PLAN & NOTES PLOT DATE: 9/12/2024 10:43:16 AM USER: CISY.CAO

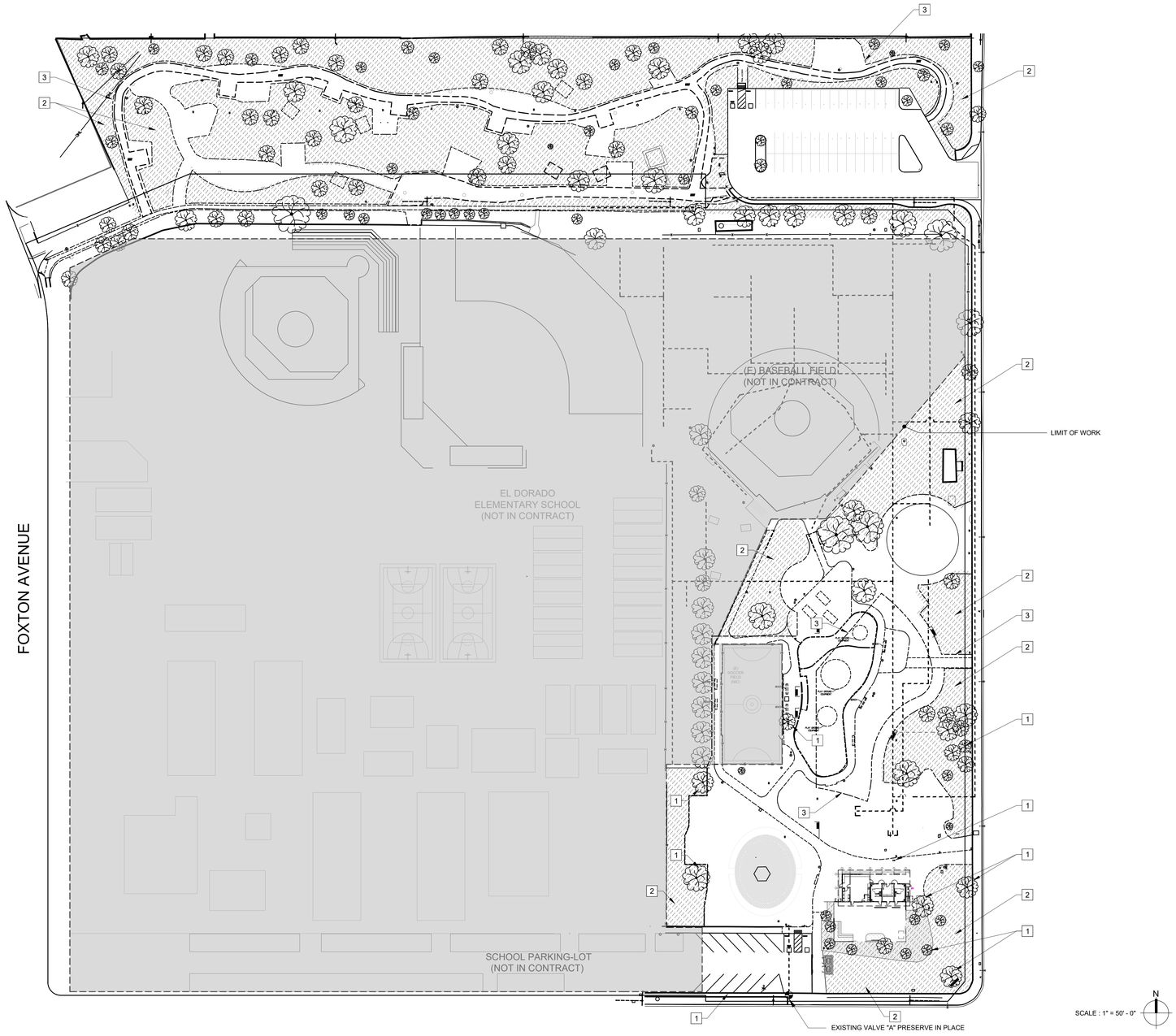

SYMBOL LEGEND

- EXISTING IRRIGATION LINE AND ASSOCIATED COMPONENTS TO BE PRESERVED IN PLACE, SEE SPECIFICATIONS
- EXISTING TREES TO BE PRESERVED IN PLACE SEE SPECIFICATIONS ALL TREES IDENTIFIED ARE TO BE FENCED FOR PROTECTION THE PERIMETER OF THE FENCING WILL EXTEND TO THE CANOPY EDGE.
- EXISTING IRRIGATION LINE CONNECTION LOCATION TO TEMPORARY IRRIGATION SYSTEM.
- EXISTING TURF & LANDSCAPE TO BE PRESERVED

LEGEND

NOT IN SCOPE OF WORK

1. TEMPORARY IRRIGATION MAY NEED TO BE PROVIDED TO ALL TREES AND TURF IDENTIFIED AS TO BE PRESERVED IN PLACE.
2. TURF & PLANTING TO BE PRESERVED IN PLACE
3. LIMIT OF GRADING, PER CIVIL PLANS
4. EXISTING DRINKING FOUNTAIN TO REMAIN

APPROVAL

CITY APPROVED BY:

DIRECTOR OF PUBLIC WORKS DATE

CITY REVIEWED BY:

SENIOR ENGINEER DATE

SUBMITTED BY:

DATE

CLIENT

LANCASTER
Creating a better tomorrow. Together.

CITY OF LANCASTER

44933 FERN AVENUE
LANCASTER, CA 93534

PROJECT NAME

SAMARITAN'S PURSE PARK FORMERLY KNOWN AS EL DORADO PARK RENOVATION

PWCP NO. 24-008

44501 5th STREET EAST
LANCASTER, CA 93535

ENGINEER/ARCHITECT

IDS

IDS GROUP

1 PETERS CANYON ROAD, SUITE 130
IRVINE, CA. 92606
TEL: 949-387-8500, FAX: 949-387-0800

STAMP

LICENSED LANDSCAPE ARCHITECT
LYNDES LIGHT
02-26-2024
STATE OF CALIFORNIA

ISSUE

REV.	DESCRIPTION	DATE
	30% CD SET	12/15/23
	60% CD SET	01/19/24
	90% CD SET	02/26/24
1	CLIENT REVISION	04/26/24
2	BID SET	09/10/24

PROJECT IDENTIFICATION

THIS DRAWING WAS CREATED IN AUTODESK AUTOCAD V. 2021 UNLESS OTHERWISE NOTED.

THE ORIGINAL SIZE OF THIS SHEET IS 30" X 42"

THESE DRAWINGS AND SPECIFICATIONS ARE THE PROPERTY AND COPYRIGHT OF IDS GROUP AND SHALL NOT BE USED ON ANY OTHER PROJECT OR LOCATIONS EXCEPT AS DESCRIBED ON THE DRAWINGS, WITHOUT THE WRITTEN AGREEMENT WITH IDS GROUP.

IDS PROJECT NO.	22X099.01
IDS DRAWN BY	KG
IDS CHECKED BY	JL
IDS APPROVED BY	JL

SHEET TITLE

LANDSCAPE PRESERVATION - PLANT & IRRIGATION PLAN & NOTES

SHEET NUMBER

LPPI-101

SHEET NO. 3 OF 23

CUMULATIVE SHEET NO. OF

PROGRESS SET - NOT FOR CONSTRUCTION

IDS GROUP - FILE LOCATION: \\IDS-FS1\SHARED\PROJECTS\2022\SHARED\22X099.01 LANC - EL DORADO PARK\05 CAD\11 LANDSCAPE\COURTYARD DESIGN\LPPI-101 LANDSCAPE PRESERVATION - PLANT & IRRIGATION PLAN & NOTES PLOT DATE: 9/12/2024 10:39:21 AM USER: KRISTEN.GROS

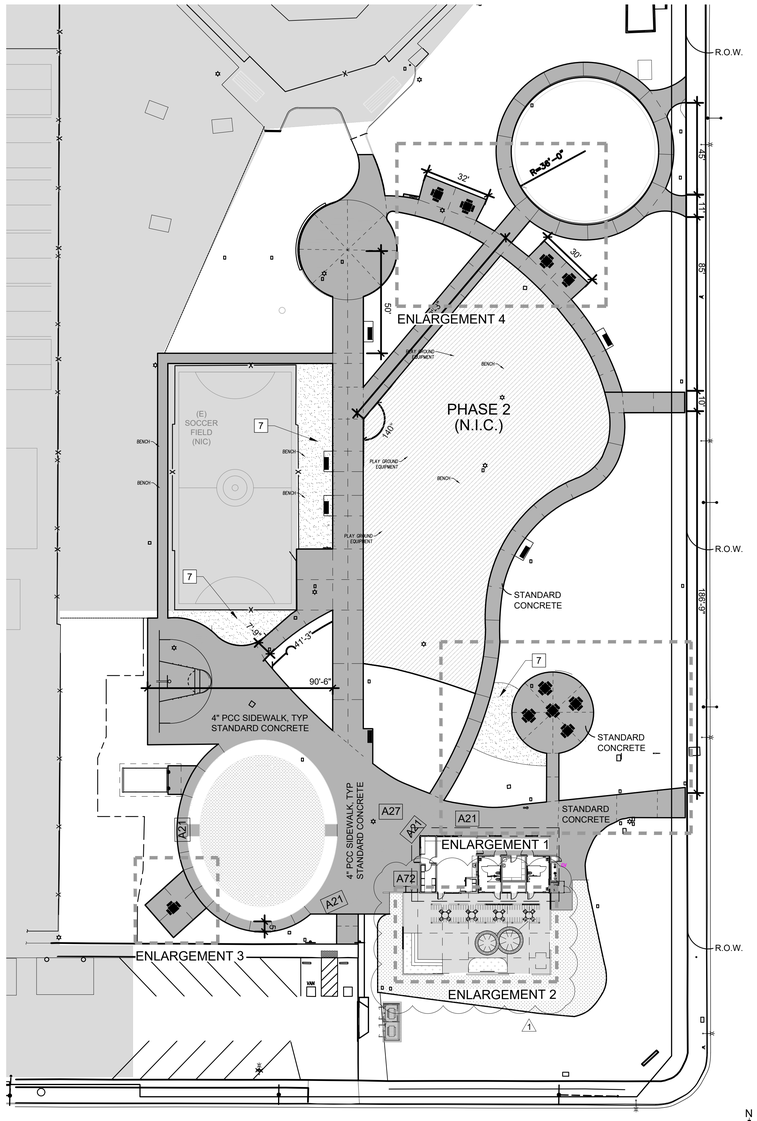

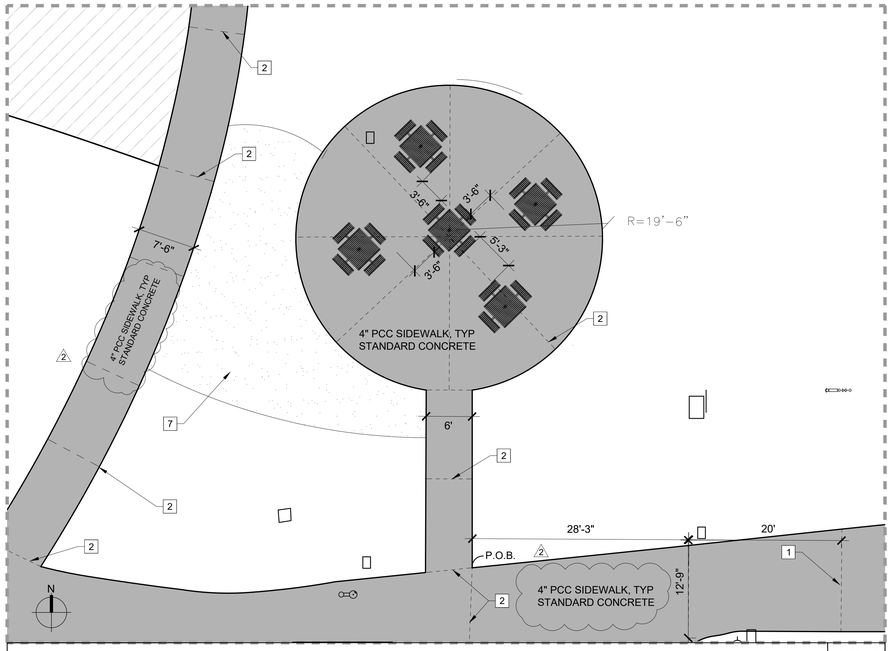

ENLARGEMENT 1 | 1/8"=1'

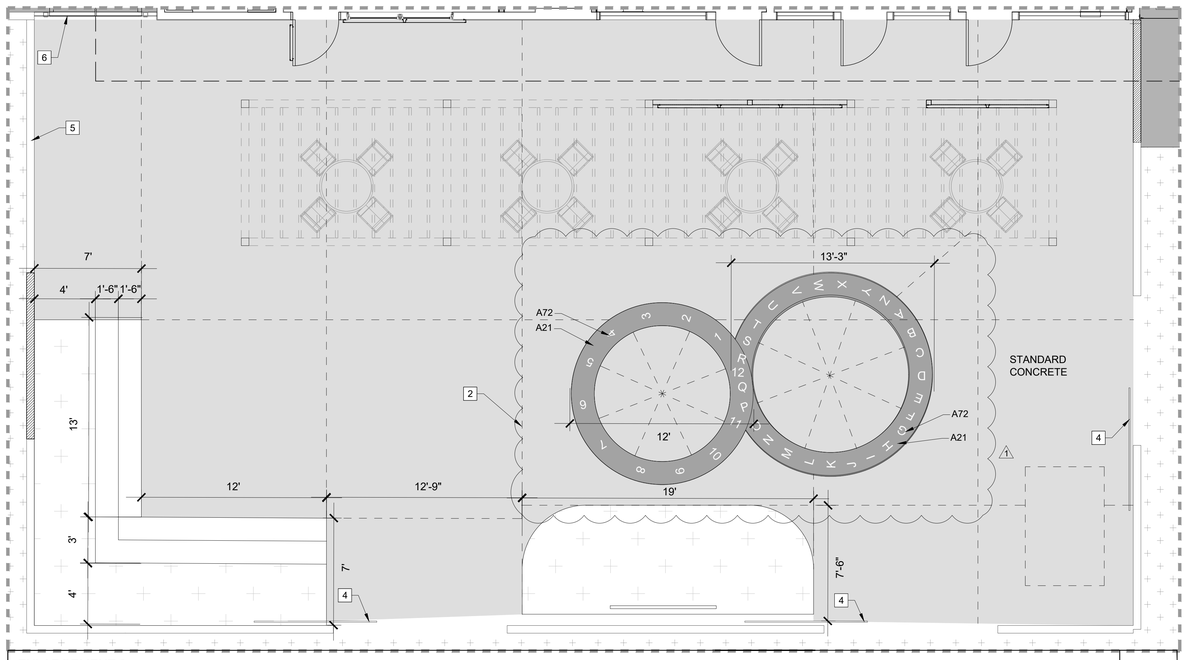

ENLARGEMENT 2 | 1/4"=1'

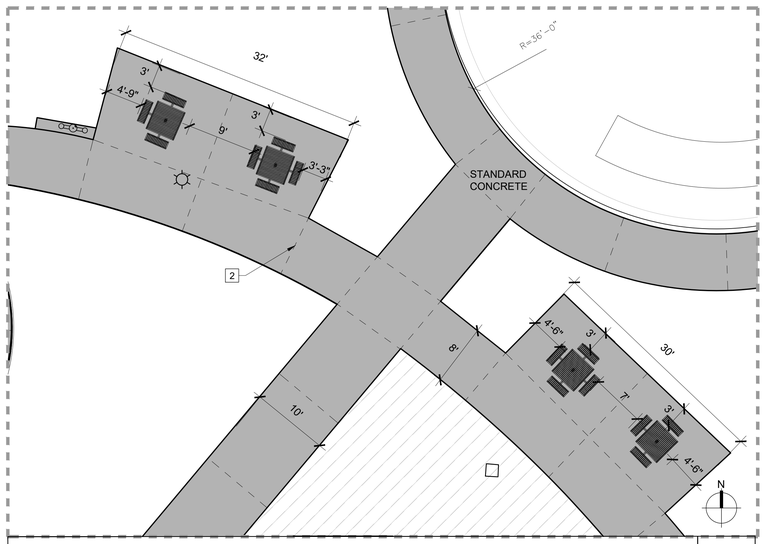

ENLARGEMENT 4 | 1/8"=1'

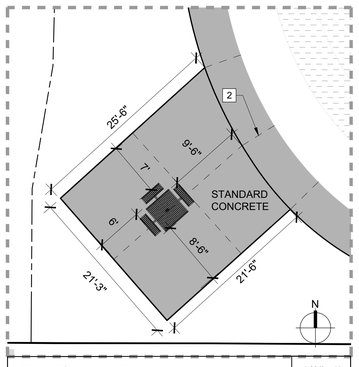

ENLARGEMENT 3 | 1/8"=1'

KEYNOTES

- A21 DARK CHARCOAL - SCOFIELD LITHOCHROME EXTERIOR CONCRETE STAIN WITH COLOR HARDENER
- A72 ASH WHITE - SCOFIELD LITHOCHROME EXTERIOR CONCRETE STAIN WITH COLOR HARDENER
- A27 DARK RED - SCOFIELD LITHOCHROME EXTERIOR CONCRETE STAIN WITH COLOR HARDENER
- 1 EXPANSION JOINT
- 2 SCORE / CONTROL JOINT
- 3 ENGRAVED LETTERS, 3'H x 3'W, ARIAL FONT
- 4 EXISTING 6' HIGH IRON GATE, TO REMAIN
- 5 EXISTING 6' HIGH IRON GATE, TO BE REMOVED
- 6 NEW DOUBLE GATE EGRESS
- 7 DECOMPOSED GRANITE WITH ALUMINUM EDGING

SYMBOL LEGEND

EXPANSION JOINT 20' O.C.

GENERAL NOTES

REFER TO MATERIAL SCHEDULE ON SHEET LC-401

KEYPLAN

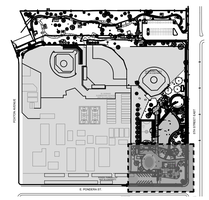

APPROVAL

CITY APPROVED BY:

DIRECTOR OF PUBLIC WORKS DATE

CITY REVIEWED BY:

SENIOR ENGINEER DATE

SUBMITTED BY:

DATE

CLIENT

LANCASTER
Creating a better tomorrow. Together.

CITY OF LANCASTER
44933 FERN AVENUE
LANCASTER, CA 93534

PROJECT NAME

SAMARITAN'S PURSE PARK FORMERLY KNOWN AS EL DORADO PARK RENOVATION

PWCP NO. 24-008

44501 5th STREET EAST
LANCASTER, CA 93535

ENGINEER/ARCHITECT

IDS

IDS GROUP
1 PETERS CANYON ROAD, SUITE 130
IRVINE, CA. 92606
TEL: 949-387-8500, FAX: 949-387-0800

STAMP

LICENSED LANDSCAPE ARCHITECT
LYNDES L. LOEB
NO. 2604
02-26-2024
STATE OF CALIFORNIA

ISSUE

REV.	DESCRIPTION	DATE
	30% CD SET	12/15/23
	60% CD SET	01/19/24
	90% CD SET	02/26/24
1	CLIENT REVISION	04/26/24
2	BID SET	09/10/24

PROJECT IDENTIFICATION

THIS DRAWING WAS CREATED IN AUTODESK AUTOCAD V. 2021 UNLESS OTHERWISE NOTED.

THE ORIGINAL SIZE OF THIS SHEET IS 30" X 42"

THESE DRAWINGS AND SPECIFICATIONS ARE THE PROPERTY AND COPYRIGHT OF IDS GROUP AND SHALL NOT BE USED ON ANY OTHER PROJECT OR LOCATIONS EXCEPT AS DESCRIBED ON THE DRAWINGS, WITHOUT THE WRITTEN AGREEMENT WITH IDS GROUP.

IDS PROJECT NO.	22X099.01
IDS DRAWN BY	KG
IDS CHECKED BY	JL
IDS APPROVED BY	JL

SHEET TITLE

LANDSCAPE HARDSCAPE PLAN & DETAILS AESTHETICS

SHEET NUMBER

LH-101

SHEET NO. 4 OF 23

CUMULATIVE SHEET NO. OF

PROGRESS SET - NOT FOR CONSTRUCTION

IDS GROUP - FILE LOCATION: \\IDS-FS1\SHARED\PROJECTS\2022\SHARED\22X099.01 LANC - EL DORADO PARK\05 CAD\11 LANDSCAPE\COURTYARD DESIGN\LH-101 LANDSCAPE HARDSCAPE PLAN & DETAILS AESTHETICS - PLAZA & PROMENADE PLOT DATE: 9/12/2024 10:40:23 AM
USER: KRISTEN GROS

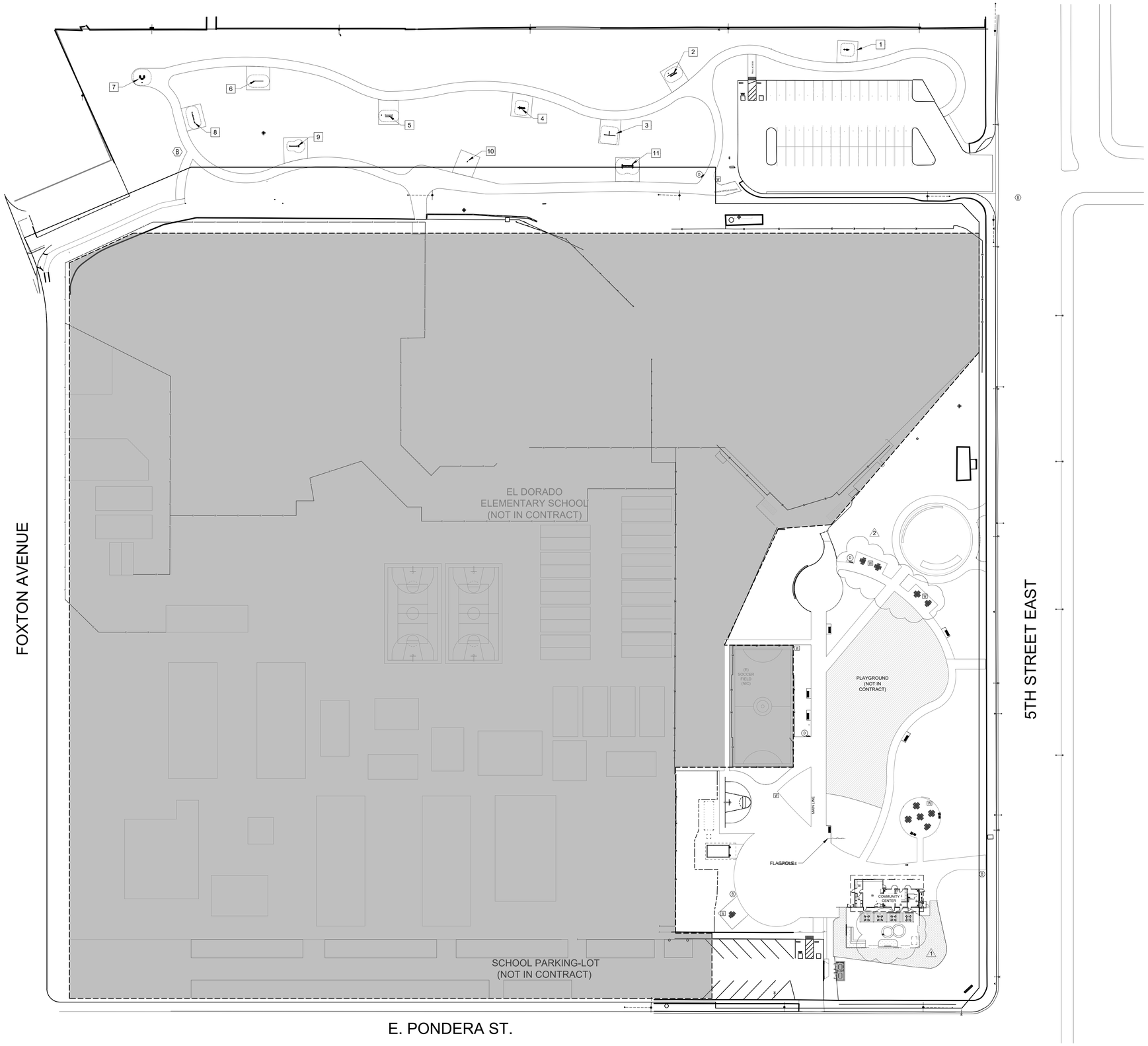

SYMBOL LEGEND

- BIKE RACK
- WASTE RECEPTACLE
- DRINKING FOUNTAIN
- BENCH
- GRILL
- ASH / TRASH
- FLAGPOLE
- STANDARD PICNIC TABLE
- ADA PICNIC TABLE

LEGEND

NOT IN SCOPE OF WORK

1. AB CRUNCH / LEG LIFT AND CHEST / BACK PRESS
2. BALANCE STEPS AND HAND CYCLER - ADA
3. ASSISTED ROW WITH PUSHUP
4. ELLIPTICAL
5. HEALTHBEAT STYLE PARALLEL BARS
6. SINGLE SLANTED RPL BOARD CLIMBER
7. PLYOMETRICS DB
8. STEEL POST W/2 AND 0 ATTACHMENTS DB
9. STRETCH DB
10. JUMP TOUCH DB ONLY
11. 2" HORIZONTAL LADDER

SCALE : 1" = 40' - 0"

N

APPROVAL

CITY APPROVED BY:

DIRECTOR OF PUBLIC WORKS DATE

CITY REVIEWED BY:

SENIOR ENGINEER DATE

SUBMITTED BY:

DATE

CLIENT

LANCASTER

Creating a better tomorrow. Together.

CITY OF LANCASTER

44933 FERN AVENUE
LANCASTER, CA 93534

PROJECT NAME

SAMARITAN'S PURSE PARK FORMERLY KNOWN AS EL DORADO PARK RENOVATION

PWCP NO. 24-008

44501 5th STREET EAST
LANCASTER, CA 93535

ENGINEER/ARCHITECT

IDS

IDS GROUP

1 PETERS CANYON ROAD, SUITE 130
IRVINE, CA. 92606
TEL: 949-387-8500, FAX: 949-387-0800

STAMP

LICENSED LANDSCAPE ARCHITECT
LYNDES L. LOMAS
02-26-2024
STATE OF CALIFORNIA

ISSUE

REV.	DESCRIPTION	DATE
	30% CD SET	12/15/23
	60% CD SET	01/19/24
	90% CD SET	02/26/24
1	CLIENT REVISION	04/26/24
2	BID SET	09/10/24

PROJECT IDENTIFICATION

THIS DRAWING WAS CREATED IN AUTODESK AUTOCAD V. 2021 UNLESS OTHERWISE NOTED.

THE ORIGINAL SIZE OF THIS SHEET IS 30" X 42"

THESE DRAWINGS AND SPECIFICATIONS ARE THE PROPERTY AND COPYRIGHT OF IDS GROUP AND SHALL NOT BE USED ON ANY OTHER PROJECT OR LOCATIONS EXCEPT AS DESCRIBED ON THE DRAWINGS, WITHOUT THE WRITTEN AGREEMENT WITH IDS GROUP.

IDS PROJECT NO.	22X099.01
IDS DRAWN BY	KG
IDS CHECKED BY	JL
IDS APPROVED BY	JL

SHEET TITLE

LANDSCAPE CONSTRUCTION PLAN - SITE FURNITURE

SHEET NUMBER

LC-102

SHEET NO. 5 OF 23

CUMULATIVE SHEET NO. OF

PROGRESS SET - NOT FOR CONSTRUCTION

IDS GROUP - FILE LOCATION: \\IDS-FS1\SHARED\PROJECTS\2022\SHARED\22X099.01 LANC - EL DORADO PARK\05 CAD\11 LANDSCAPE\COURTYARD DESIGN\LC-102 LANDSCAPE CONSTRUCTION PLAN - SITE FURNITURE, DRINKING FOUNTAIN PLOT DATE: 9/12/2024 10:37:04 AM USER: KRISTEN.GROS

LANDSCAPE CONSTRUCTION MATERIAL SCHEDULE

QTY. SOUTH	QTY. NORTH	COMPONENT NAME & PLAN SYMBOL	DETAIL	MODEL/ SKU NO.	MANUFACTURE	DESCRIPTION	SIZE	COLOR	MATERIAL	PHOTO
5	1	WASTE CONTAINERS W	4/LC504	SKU 4ZT4175	NORTHGATE-GRAND	45 GALLON RECEPTACLE WITH SIDE DOOR AND FLAT LID	29"Ø - 40.5" H	BLACK	STEEL	
1	1	DRINKING FOUNTAIN D	4/LC503	LK4430BF1UGRY	ELKAY	OUTDOOR EZH20 UPPER BOTTLE FILLING STATION TRI-LEVEL PEDESTAL NON-FILTERED NON-REFRIGERATED GRAY	14"L X 48"W X 64"H	GRAY	316 STAINLESS, HEAVY DUTY VANDAL RESISTANT, LAMINAR FLOW	
7 BENCHES 7 ARMRESTS 2	0	BENCH & ARMREST	2/LC504	2ZT2086 TBN-ARM	NORTHGATE	8' BENCH WITH ARCHED BACK & CENTER ARMREST	91.5"L x 25"W x 34"H	BLACK ONYX	STEEL - ALL BENCHES HAVE CENTER ARMREST INSTALLED AT THE CENTER OF EACH BENCH	
6	0	STANDARD TABLE	6/LC503	1ZV6248	NORTHGATE	WHEELCHAIR ACCESSIBLE PICNIC TABLE - SQUARE PEDESTAL ADA TABLE	82"L x 82"W x 31"H	BLACK	STEEL	
4	0	ADA TABLE	1/LC504	1ZV6247	NORTHGATE	PICNIC TABLE - SQUARE PEDESTAL TABLE	82"L x 82"W x 31"H	BLACK	STEEL	
2	0	PEDESTAL PARK GRILL	6/LC504	SB16 ADA	KAY PARK	ADA COMPLIANT MODEL	-	BLACK	STEEL	
2	0	STEEL COAL ASH RECEPTACLE	-	KPHCB	KAY PARK	HINGE DOOR TO EMPTY CAN	23" SQUARE TOP FUNNELS TO 12"	BLACK	STEEL	
2	1	BICYCLE RACK B	5 / LC-504	'FLO BICYCLE RACK'	LANDSCAPE FORMS	INSTALL PER MANUF. DETAILS	25.5"L x 27.75"W x 32.5"H	SILVER	STEEL	
1	0	FLAGPOLE	1 / LC-401	MODEL ECA40 - EXTERNAL SINGLE HALYARD	LIBERTY FLAGPOLE	INSTALL PER MANUF. DETAILS	8" W x 40' H	SATIN	ALUMINUM	

MATERIAL SCHEDULE

PHOTO	SYMBOL	ABBREVIATION	BOTANICAL/COMMON NAME	QTY.
		DG	STABILIZED DECOMPOSED GRANITE (DG) 'PERMAZYME 11X', DETAIL 3, LC-503	
		BOULDERS	SOUTHWEST CAMERON SURFACE BOULDERS	14
		DECORATIVE LANDSCAPE POT	TOURNESOL QS-3600 FRP WITH CWC-2100 / CWM-1720-2K IRRIGATION SYSTEM WITH IRRIGATION	3
			COLORED CONCRETE	

2

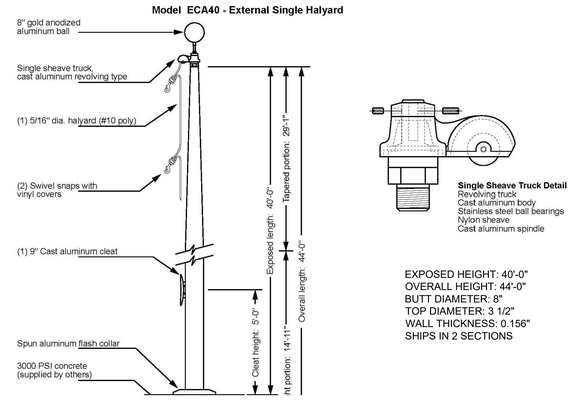

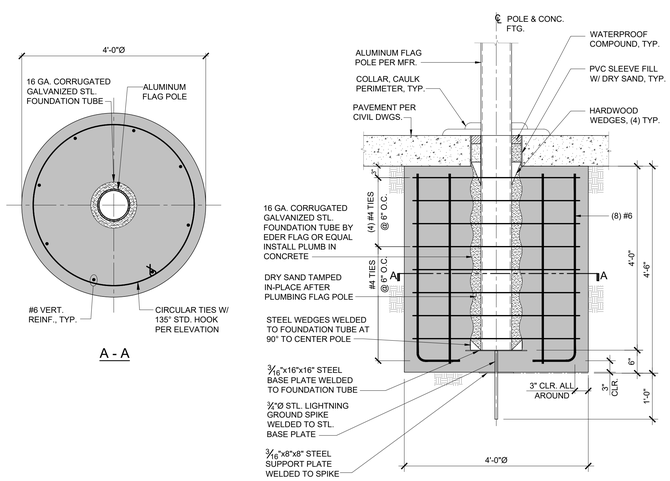

1 40 FT FLAGPOLE FOUNDATION 3/4" = 1'-0" SECTION

CONSTRUCTION ASSEMBLY NOTES

1. REMOVE HARDWOOD WEDGES AFTER FLAGPOLE PLACEMENT AND COMPACTION OF SAND AND PRIOR TO PLACEMENT OF WATERPROOF COMPOUND.
2. HOT DIP GALVANIZE STEEL BASE PLATE, SUPPORT AND STEEL LIGHTNING GROUND SPIKE AFTER ASSEMBLY AND WELDING ARE COMPLETE.
3. DO NOT USE ADMIXTURES IN FOUNDATION CONCRETE WHICH CONTAIN MORE THAN 1% CHLORIDES AS CL BY WEIGHT OF ADMIXTURE.
4. ENSURE THAT FLAGPOLE SETTING SAND IS DRY DURING ENTIRE PLACEMENT, COMPACTION AND SEALING PROCESS.
5. CONCRETE COMPRESSIVE STRENGTH f'm = 4,000 PSI. WATER- CEMENT RATIO = 0.45 MAX.

1 FLAGPOLE & FOOTING

APPROVAL

CITY APPROVED BY:
DIRECTOR OF PUBLIC WORKS DATE
CITY REVIEWED BY:
SENIOR ENGINEER DATE
SUBMITTED BY:
DATE

CLIENT
LANCASTER
Creating a better tomorrow. Together.
CITY OF LANCASTER
44933 FERN AVENUE
LANCASTER, CA 93534

PROJECT NAME
SAMARITAN'S PURSE PARK FORMERLY KNOWN AS EL DORADO PARK RENOVATION
PWCP NO. 24-008
44501 5th STREET EAST
LANCASTER, CA 93535

ENGINEER/ARCHITECT
IDS
IDS GROUP
1 PETERS CANYON ROAD, SUITE 130
IRVINE, CA. 92606
TEL: 949-387-8500, FAX: 949-387-0800

STAMP
REGISTERED LANDSCAPE ARCHITECT LYNDES LICENSE NO. 5616 02-26-2024 STATE OF CALIFORNIA

ISSUE

REV.	DESCRIPTION	DATE
	30% CD SET	12/15/23
	60% CD SET	01/19/24
	90% CD SET	02/26/24
1	CLIENT REVISION	04/26/24
2	BID SET	09/10/24

PROJECT IDENTIFICATION

THIS DRAWING WAS CREATED IN AUTODESK AUTOCAD V. 2021 UNLESS OTHERWISE NOTED.

THE ORIGINAL SIZE OF THIS SHEET IS 30" X 42"

THESE DRAWINGS AND SPECIFICATIONS ARE THE PROPERTY AND COPYRIGHT OF IDS GROUP AND SHALL NOT BE USED ON ANY OTHER PROJECT OR LOCATIONS EXCEPT AS DESCRIBED ON THE DRAWINGS, WITHOUT THE WRITTEN AGREEMENT WITH IDS GROUP.

IDS PROJECT NO.	22X099.01
IDS DRAWN BY	KG
IDS CHECKED BY	JL
IDS APPROVED BY	JL

SHEET TITLE
LANDSCAPE CONSTRUCTION MATERIAL SCHEDULE

SHEET NUMBER
LC-401

SHEET NO. 6 OF 23

CUMULATIVE SHEET NO. OF

IDS GROUP - FILE LOCATION: \\IDS-FS1\SHARED\PROJECTS\2022\SHARED\22X099.01 LANC - EL DORADO PARK\05 CAD\11 LANDSCAPE\COURTYARD DESIGN\LC-401 LANDSCAPE CONSTRUCTION MATERIALS SCHEDULE PLOT DATE: 9/12/2024 10:38:30 AM USER: KRISTEN.GROS
PROGRESS SET - NOT FOR CONSTRUCTION

4 DRINKING FOUNTAIN / WATER BOTTLE STATION

ELKAY SPECIFICATIONS

Elkay Outdoor ezH2O® Upper Bottle Filling Station Tri-Level Pedestal Non-Filtered Non-Refrigerated
Model LK4430BF1U

PRODUCT SPECIFICATIONS
Elkay Outdoor ezH2O® Upper Bottle Filling Station Tri-Level Pedestal Non-Filtered Non-Refrigerated. Features shall include Heavy Duty Vandal Resistant, Laminar Flow, 300 Series Stainless. Furnished with Vandal Resistant bubbler. Mechanical Button activation. Product shall be Floor Mount/Freestanding, for Outdoor applications, serving 3 station(s).

Special Features:	Heavy Duty Vandal Resistant, Laminar Flow, 300 Series Stainless
Finish:	Black (BK), Blue (BLU), Evergreen (EVG), Gray (GRY)
Power:	No Electrical Required
Bubbler Style:	Vandal Resistant
Activation by:	Mechanical Button
Mounting Type:	Floor Mount/Freestanding
Chilling Capacity:	Non-refrigerated
Dimensions (L x W x H):	14" x 48" x 64"
Approx. Shipping Weight:	215 lbs.
Installation Location:	Outdoor
No. of Stations Served:	3

**When used in non-temperature controlled environments, unit(s) must be adequately winterized and/or protected from extreme heat to prevent damage where climates dictate.

Special Note: Bottle Filler Stations 1 (Upper), Bubbler Stations 2 (Mid-Low), Choose from 4 color options

- Mechanically-Activated unit continues to supply water in event of service disruptions.
- Laminar flow provides clean fill with minimal splash.

Included with Product: **Outdoor Bottle Filler Ships in one box.**
A Century of Tradition and Quality.
For more than 100 years, Elkay has been making innovative products and providing exceptional customer care. We take pride in offering plumbing products that make life easier, inspire change and leave the world a better place.

PRODUCT COMPLIANCE
ADA & ICC A117.1
ASME A112.19.3/CSA B45.4
GreenSpec®
NSF/ANSI 61 (Q≤1) & 372 (lead free)
NSF REG4

Complies with ADA & ICC A117.1 accessibility requirements when installed according to the requirements outlined in these standards. Installation may require additional components and/or construction features to be fully compliant. Consult the local Authority Having Jurisdiction if necessary.
Installation Instructions (PDF) - 1000004246

Warranty pertains to drinking water applications only. Non-drinking water applications are not covered under warranty.

LK4430BF1UGRY
ELKAY OUTDOOR EZH20 UPPER
BOTTLE FILLING STATION
TRI-LEVEL PEDESTAL
NON-FILTERED
NON-REFRIGERATED GRAY

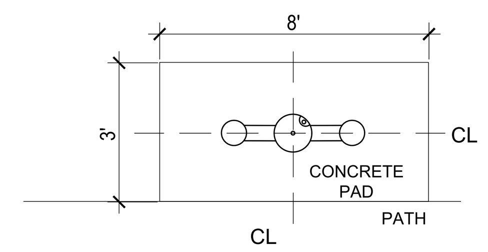

PLAN VIEW

ELKAY SPECIFICATIONS

Elkay Outdoor ezH2O® Upper Bottle Filling Station Tri-Level Pedestal Non-Filtered Non-Refrigerated
Model LK4430BF1U

MOUNTING INSTRUCTIONS and PLUMBING CONNECTIONS
Provide solid, well-drained surface to mount pedestal fountain (concrete pad recommended) with adequate support (300 lb. load minimum). (6) 3/8" minimum fasteners (not included) should be attached firmly to mounting surface in order to secure unit. (Refer to rough-in diagram)

Locate and install plumbing through ground as required.

NOTE: Unit is not furnished with service valve.

Position pedestal over plumbing and secure base to fasteners. Remove access panels and connect supply and water lines. Turn on water supply and check for leaks. Reassemble access panels to pedestal.

Trap and service stop not included.

OPERATING PRESSURES:
Supply water 20 – 105 psi maximum

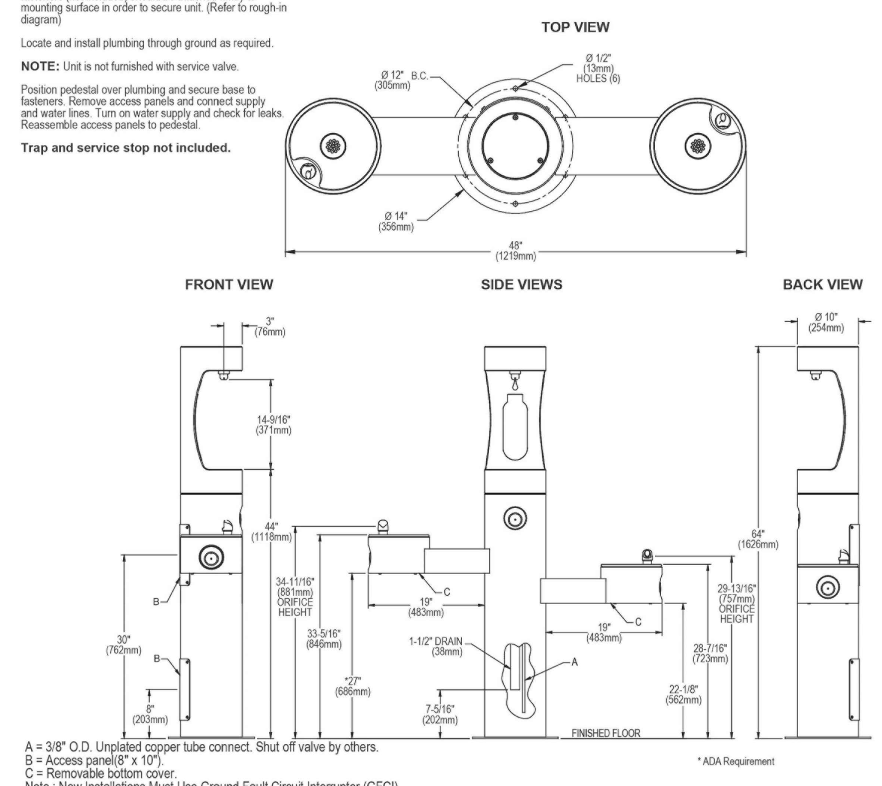

A = 3/8" O.D. Unplated copper tube connect. Shut off valve by others.
B = Access panel(8" x 10").
C = Removable bottom cover.
Note : New Installations Must Use Ground Fault Circuit Interrupter (GFCI).

NOTE:
DRINKING FOUNTAIN WATER SOURCE SHALL CONNECT TO BUILDING WITH POTABLE PIPING.

INSTALL PER MANUFACTURER'S RECOMMENDATIONS
(SURFACE MOUNT) ON CONCRETE PAD
COLOR: 'GRAY'

In keeping with our policy of continuing product improvement, Elkay reserves the right to change product specifications without notice. Please visit elkay.com for the most current version of Elkay product specification sheets. This specification describes an Elkay product with design, quality, and functional benefits to the user. When making a comparison of other producers' offerings, be certain these features are not overlooked.

Elkay REV 11302023 | 1-800-260-6640 | SVtechservice@Elkay.com | © 2023 Page 3
LK4430BF1U | Patent zurn-elkay.com/patents | LK4430BF1U_spec.pdf

1 CONCRETE PAVING & PAD PROFILE

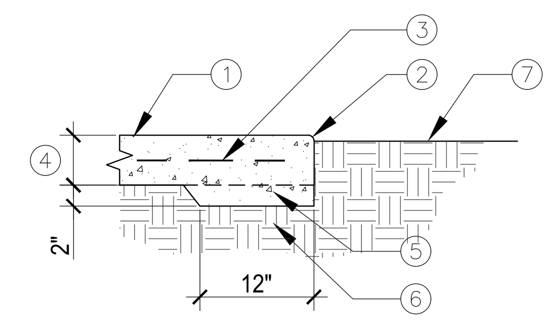

CONCRETE PAVEMENT NOTES:
1. JOINTING SHOWN ON PLAN IS APPROXIMATE.
2. ALL PAVEMENTS AND JOINTING TO COMPLY WITH GEOTECHNICAL FLATWORK RECOMMENDATIONS BY ASSOCIATED SOILS ENGINEERING. INC. DATED 6/17/23 AND AMERICAN CONCRETE INSTITUTE REPORT 330R-08 *GUIDE FOR DESIGN AND CONSTRUCTION OF CONCRETE PARKING LOTS.*

1. CONCRETE PAVEMENT, FINISH PER PLANS AND PAVEMENT SCHEDULE - STRENGTH:
   PEDESTRIAN - 2,500 PSI MIN.
   LIGHT VEHICULAR - 3,250 PSI MIN.
2. 1/2" R EDGES
3. REINFORCEMENT, CENTERED IN PAVEMENT:
   PEDESTRIAN - 6X6 - W2.9X/2.9 WWM
   LIGHT VEHICLE - #3@18"O.C.B.W.
4. PAVEMENT THICKNESS:
   PEDESTRIAN - 4"
   LIGHT VEHICULAR - 6"
5. DEEPENED EDGE FOR LIGHT VEHICULAR PAVEMENTS
6. COMPACT BASE PER FLATWORK RECOMMENDATIONS
7. FINISH GRADE, DRAIN AWAY FROM PAVEMENTS

6 TABLE - ADA

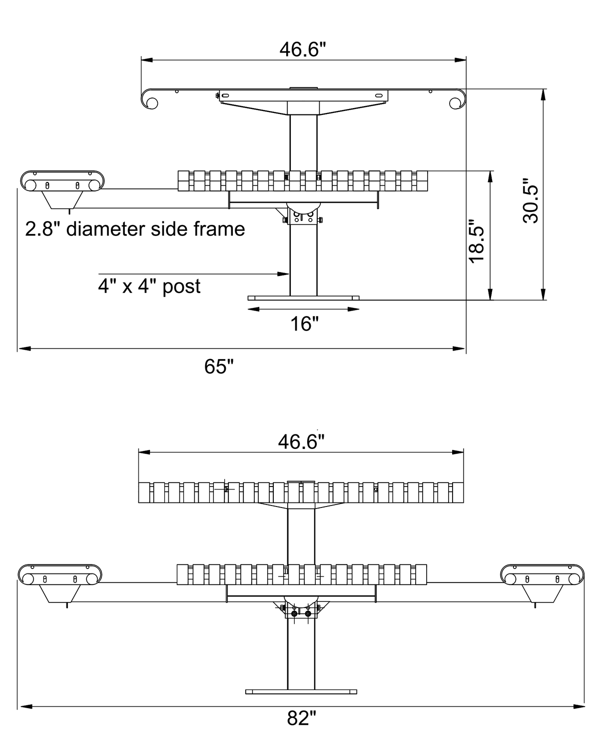

TOTAL WEIGHT: 336 lbs

NOTES: 1) Durable steel construction with rust-resistant, Black Onyx powder-coated finish
2) Pre-drilled for surface mount
3) Precisely rolled vertical slats offer premium seating comfort

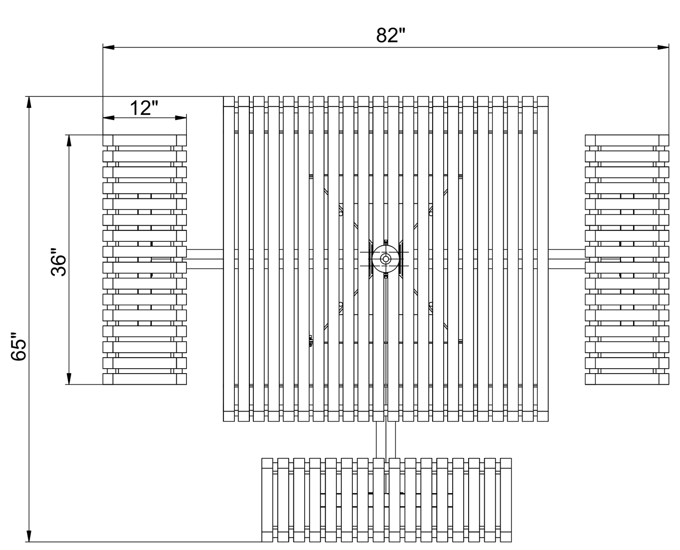

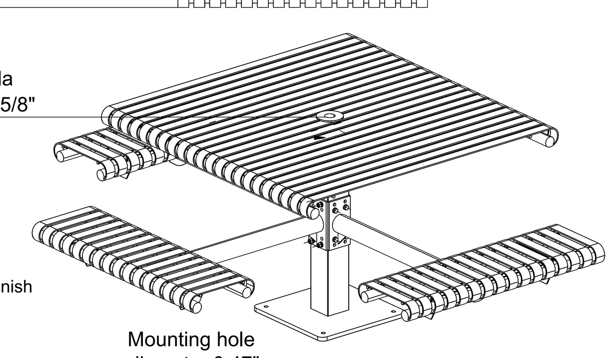

SURFACE MOUNT KIT FOR PICNIC TABLES, SET OF 2

NORTHGATE PICNIC TABLE
COLOR: BLACK

5 NOT USED

2 CONCRETE PAVING & PAD JOINTING

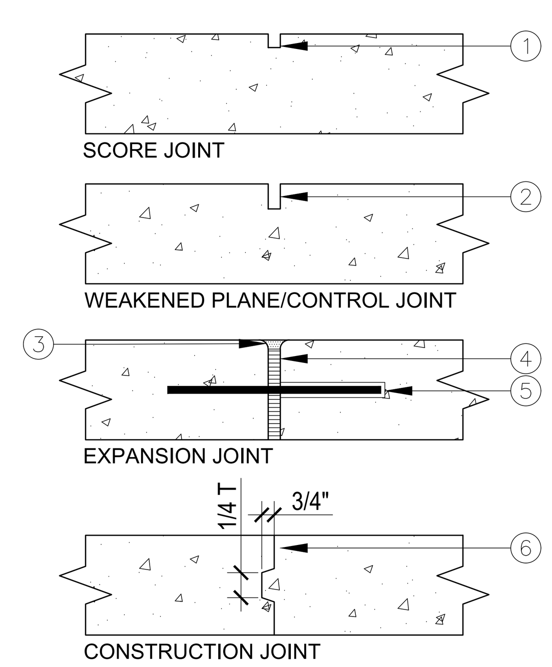

1. 1/8" WIDE X 1/2" DEEP SAWCUT SCORE JOINT.
2. SAWCUT WEAKENED PLANE JOINT, MIN. 1/4TH DEPTH OF PAVEMENT:
   SPORT COURTS - 3/8", FILLED PER SPECS.
   LIGHT VEHICULAR - 3/8", FILLED PER SPECS.
   PEDESTRIAN - 1/8" UNFILLED
3. 1/4" R EDGE.
4. EXPANSION JOINT FILLER MATERIAL, SET 1/2" BELOW FINISH SURFACE, FILL WITH SELF LEVELING JOINT FILLER PER SPECS, COLOR TO MATCH PAVEMENT:
   3/8" PEDESTRIAN WALKS
   1/2" AT BLDG FOUND. AND LIGHT VEHIC. AREAS
   3/4" FOR SPORT COURTS
5. 1" X 14" LONG STEEL SLIP DOWEL @ 12" O.C. WITH ONE END SLEEVED FOR LIGHT VEHICULAR PAVEMENTS. DOWEL PAVEMENT TO ADJACENT PAVEMENTS AND FOUNDATIONS AT DOORWAYS.
6. PRE-FABRICATED KEYED CONSTRUCTION JOINT

7 ISOLATION BALL VALVE AT DRINKING FOUNTAIN

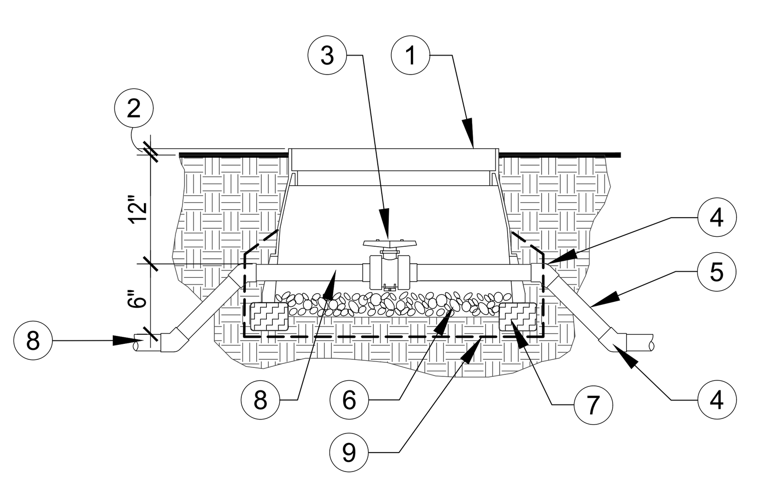

1. PLASTIC VALVE BOX PER SCHEDULE ABOVE W/ PURPLE BOLT-DOWN COVER. HEAT STAMP "BV" ON LID.
2. 2" IN SHRUB AREAS.
3. PVC BALL VALVE WITH INTEGRAL SCHEDULE 40 PVC UNION.
4. 45° ELL (TYP.), PVC SCH. 40
5. PVC POTABLE WATER SUPPLY, REFER TO CIVIL DRAWINGS.
6. 4" MIN. PEA GRAVEL.
7. 2" X 4" BRICK OR CONCRETE BLOCKING.
8. 3/4" SCH. 40 PVC SUPPLY TO FOUNTAIN.
9. #4 MESH, GALV, WELDED, 23 GA. FABRIC GOPHER BARRIER, WRAP MIN. 3 INCHES UP VALVE BOX

8 DRINKING FOUNTAIN SUMP DRAIN

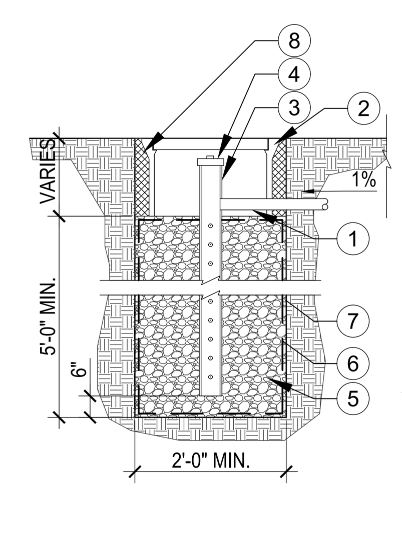

NOTES:
1. LOCATE DRAIN IN LANDSCAPE NEAR DRINKING FOUNTAIN.

1. 2" SCH. 40 PVC DRAIN LINE TO SUMP FROM DRINKING FOUNTAIN. SLOPE MIN. 1% TO SLUMP.
2. 15" X 23" CONC. VALVE BOX WITH LOCKING CAST IRON LID.
3. 4" DIA. SDR-35 PERF. DRAIN PIPE W/APPROVED FILTER SOCK.
4. CLEANOUT CAP.
5. 3/4" WASHED DRAIN ROCK. MIRAFI 140N FABRIC WRAP ON ALL SIDES.
6. MIN. 24" DIA. SUMP PIT. BACKFILL BOX WITH CLEAN NATIVE SOIL.

3 STABILIZED DG PATH & EDGING (PEDESTRIAN)

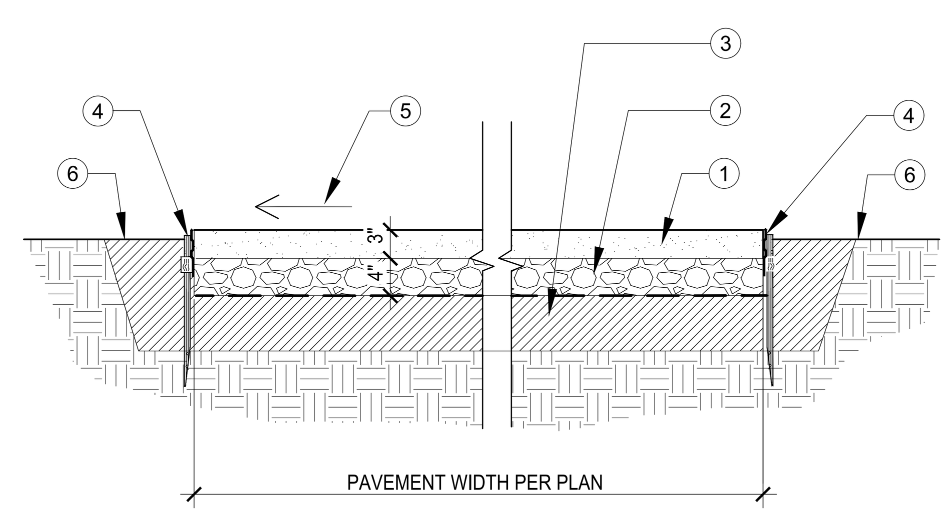

1. 3" DEPTH OF DECOMPOSED GRANITE WITH STABILIZER BLENDED AT BATCH PLANT. REFER TO MATERIALS SCHEDULE, SHEET LC-601. COMPACT PER SOILS ENGINEER'S RECOMMENDATIONS IN 1" LIFTS.
2. 4" DEPTH OF 3/4" CLASS II ROCK BASE OVER FILTER FABRIC, COMPACT PER SOILS REPORT TO 6" DEPTH MINIMUM TO 95% PER ASTM D1557.
3. SCARIFY, CONDITION AND COMPACT SUBBASE TO 12" DEPTH MIN. TO 95% PER ASTM D1557.
4. ALUMINUM EDGING. REFER TO DETAIL LC-505.
5. PROVIDE 1.5% CROSS SLOPE AS SHOWN ON PLANS.
6. FINISH GRADE

APPROVAL

CITY APPROVED BY:
DIRECTOR OF PUBLIC WORKS — DATE
CITY REVIEWED BY:
SENIOR ENGINEER — DATE
SUBMITTED BY:
DATE

CLIENT
LANCASTER
Creating a better tomorrow. Together.
CITY OF LANCASTER
44933 FERN AVENUE
LANCASTER, CA 93534

PROJECT NAME
SAMARITAN'S PURSE PARK FORMERLY KNOWN AS EL DORADO PARK RENOVATION

PWCP NO. 24-008

44501 5th STREET EAST
LANCASTER, CA 93535

ENGINEER/ARCHITECT
IDS
IDS GROUP
1 PETERS CANYON ROAD, SUITE 130
IRVINE, CA. 92606
TEL: 949-387-8500, FAX: 949-387-0800

STAMP

ISSUE

REV.	DESCRIPTION	DATE
	30% CD SET	12/15/23
	60% CD SET	01/19/24
	90% CD SET	02/26/24
1	CLIENT REVISION	04/26/24
2	BID SET	09/10/24

PROJECT IDENTIFICATION
THIS DRAWING WAS CREATED IN AUTODESK AUTOCAD V. 2021 UNLESS OTHERWISE NOTED.
THE ORIGINAL SIZE OF THIS SHEET IS 30" X 42"
THESE DRAWINGS AND SPECIFICATIONS ARE THE PROPERTY AND COPYRIGHT OF IDS GROUP AND SHALL NOT BE USED ON ANY OTHER PROJECT OR LOCATIONS EXCEPT AS DESCRIBED ON THE DRAWINGS, WITHOUT THE WRITTEN AGREEMENT WITH IDS GROUP.

IDS PROJECT NO.	22X099.01
IDS DRAWN BY	KG
IDS CHECKED BY	JL
IDS APPROVED BY	JL

SHEET TITLE
CONSTRUCTION DETAILS

SHEET NUMBER
LC-503

SHEET NO. 7 OF 23
CUMULATIVE SHEET NO. OF

PROGRESS SET - NOT FOR CONSTRUCTION

IDS GROUP - FILE LOCATION: \\IDS-FS1\SHARED\PROJECTS\2022\SHARED\22X099.01 LANC - EL DORADO PARK\05 CAD\11 LANDSCAPE\COURTYARD DESIGN\LC-503 CONSTRUCTION DETAILS PLOT DATE: 9/12/2024 10:41:52 AM USER: KRISTEN.GROS

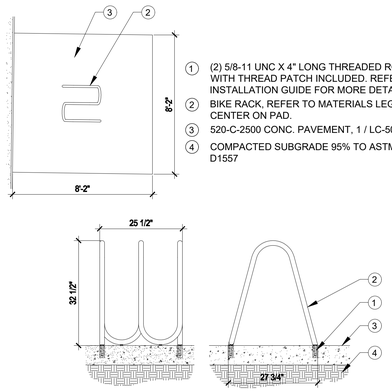

1. (2) 5/8-11 UNC X 4" LONG THREADED RODS WITH THREAD PATCH INCLUDED. REFER TO INSTALLATION GUIDE FOR MORE DETAILS.
2. BIKE RACK, REFER TO MATERIALS LEGEND. CENTER ON PAD.
3. 520-C-2500 CONC. PAVEMENT, 1 / LC-503
4. COMPACTED SUBGRADE 95% TO ASTM D1557

5 BICYCLE RACK

LEGEND

1. LANDSCAPE BOULDER -ROUNDED SIDE UP
2. LANDSCAPE MULCH
3. FINISH GRADE
4. COMPACTED SUBGRADE

NOTES:
CONTRACTOR SHALL STAKE BOULDER LOCATIONS TO BE APPROVED BY OWNER'S REPRESENTATIVE PRIOR TO FINAL PLACEMENT

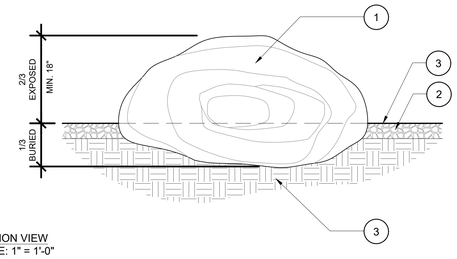

SECTION VIEW
SCALE: 1" = 1'-0"

3 DECORATIVE BOULDER PLACEMENT

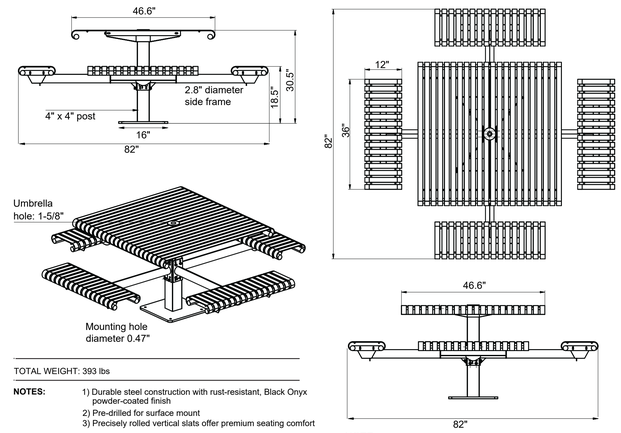

TOTAL WEIGHT: 393 lbs

NOTES:
1) Durable steel construction with rust-resistant, Black Onyx powder-coated finish
2) Pre-drilled for surface mount
3) Precisely rolled vertical slats offer premium seating comfort

NORTHGATE PICNIC TABLE
COLOR: BLACK

NOTE:
BOLT INSTALLATION PER MANUFACTURER'S RECOMMENDATION

1 TABLE

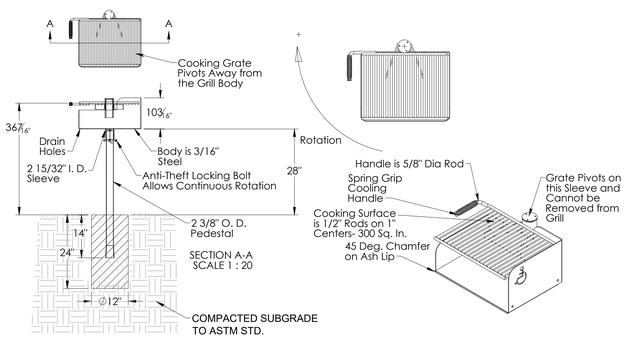

PAINT FINISH is HIGH HEAT RESISTANT NON-TOXIC EMAMEL

6 PEDESTAL PARK GRILL - ADA

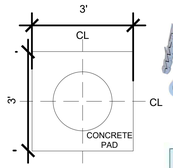

PLAN VIEW

NORTHGATE SURFACE MOUNT HARDWARE KIT (4)

NORTHGATE-GRAND 45 GALLON RECEPTACLE W/ SIDE DOOR
COLOR: BLACK

SKU	BNHRD-4
Model Name	Bench Hardware Kit - 4 Sets
Weight	0.5

SKU	4ZT4175	4ZT4176
Model Name	45 Gal Flat Lid Receptacle	45 Gal Rain Bonnet Lid Receptacle
Material	Steel	Steel
Weight	140.0	145.0
Overall Dimensions	31.25"Dia. x 40.75"H	31.25"Dia. x 47"H

4 WASTE CONTAINERS

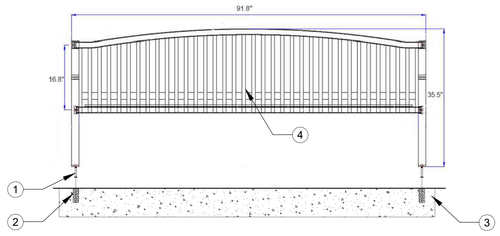

NORTHGATE BENCH W/ ARCHED BACK AND ARMREST
COLOR: BLACK

1. (4)1/2"DIA. x 4 1/2"L. BOLTS
2. (4) 2"DIA. x 5"DEEP GROUT POCKETS
3. CONCRETE PAD, LC-503
4. ARMREST (ATTACHMENT CENTERED ON BENCH)

SKU	2ZT2086	2ZV2354
Model Name	6' Bench	8' Bench
Material	Steel	Steel
Mount Type	Portable/Surface Mount	Portable/Surface Mount
Seat Dimensions	74"L x 25"W x 18"H	91.5"L x 25"W x 18"H
Weight	177.0	215.0
Overall Dimensions	74"L x 25"W x 34"H	91.5"L x 25"W x 34"H

2 BENCH W/ BACK & ARMREST

SUBSTRATA
SOLUTIONS POWERED BY ENZYMES

ENGINEERING REPORT: PERMA-ZYME TEST DATA

R-VALUE

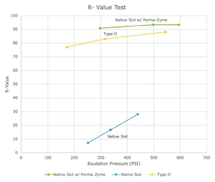

COMPRESSIVE STRENGTH

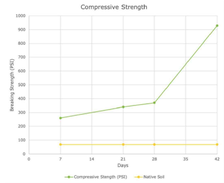

What is R-Value?
The R-Value test measures the response of a compacted sample (soil or aggregate) to a vertically applied pressure under specific conditions.

The larger the R-Value the more resistance the soil has to resist lateral spreading due to an applied vertical load.

SOIL CLASSIFICATION

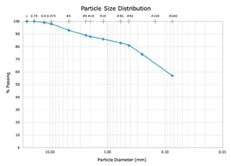

Sieve Size	Percent Finer
1in	100
0.75in	100
0.5in	99
0.375in	98
#4	93
#8	89
#10	88
#16	86
#30	83
#40	81
#50	80
#100	74
#200	57

ENGINEERING REPORT: SOUTHERN NEVADA TEST

TEST LOCATION: LOCATION #3

R-VALUE

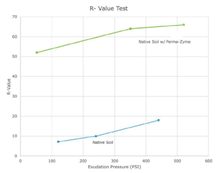

What is R-Value?
The R-Value test measures the response of a compacted sample (soil or aggregate) to a vertically applied pressure under specific conditions.

The larger the R-Value the more resistance the soil has to resist lateral spreading due to an applied vertical load.

SOIL CLASSIFICATION

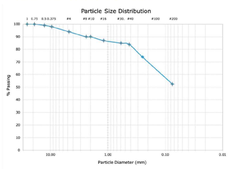

PI	<#200 (%)	<0.005mm (%)	Max OD (psf)	Native R-Value	Swell (%)
11	61.1	24.7	124.0	12	3.0

*All testing performed by independent laboratory.

SUBSTRATA substrata.us

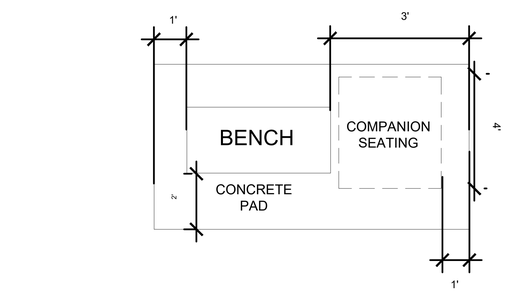

WALKWAY

7 BENCH PLAN VIEW

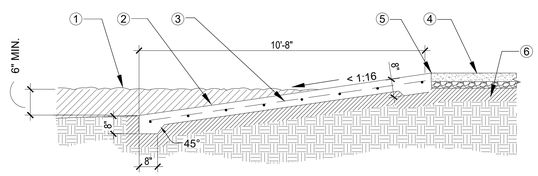

1. PLAYGROUND ENGINEERED WOOD FIBER, 6" MIN. DEPTH AT EDGE. MOUND IN CENTER & SLOPE UNIFORMLY TO EDGES. COMPACT PER MANUFACTURER SPECIFICATIONS.
2. 48" WIDE CONC. RAMP W/MED. BROOM FINISH EXTENDED INTO WOOD CHIPS. LOCATE PER PLAN.
3. #3 REBAR @ 24" O.C. BOTH WAYS.
4. STABILIZED DG ACCESS SIDEWALK, REFER TO DETAIL 3 / LC-503.
5. EXERCISE STATION ALUMINUM EDGING, REFER TO DETAIL 5 / LC-505.
6. SUBSOIL COMPACTED PER SOIL ENGINEER'S PAVEMENT RECOMMENDATION TO 12" COMPACT TO 95% ASTM D1557.

NOTE:
LOCATE RAMP OUTSIDE OF EXERCISE EQUIPMENT FALL ZONES.

8 EXERCISE EQUIPMENT ACCESS RAMP

APPROVAL

CITY APPROVED BY:
DIRECTOR OF PUBLIC WORKS — DATE
CITY REVIEWED BY:
SENIOR ENGINEER — DATE
SUBMITTED BY:
DATE

CLIENT
LANCASTER
Creating a better tomorrow. Together.
CITY OF LANCASTER
44933 FERN AVENUE
LANCASTER, CA 93534

PROJECT NAME
SAMARITAN'S PURSE PARK FORMERLY KNOWN AS EL DORADO PARK RENOVATION
PWCP NO. 24-008
44501 5th STREET EAST
LANCASTER, CA 93535

ENGINEER/ARCHITECT
IDS
IDS GROUP
1 PETERS CANYON ROAD, SUITE 130
IRVINE, CA. 92606
TEL: 949-387-8500, FAX: 949-387-0800

STAMP
REGISTERED LANDSCAPE ARCHITECT
JOHN LYNDES LIGHTS
02-26-2025
STATE OF CALIFORNIA

ISSUE

REV.	DESCRIPTION	DATE
	30% CD SET	12/15/23
	60% CD SET	01/19/24
	90% CD SET	02/26/24
1	CLIENT REVISION	04/26/24
2	BID SET	09/10/24

PROJECT IDENTIFICATION
THIS DRAWING WAS CREATED IN AUTODESK AUTOCAD V. 2021 UNLESS OTHERWISE NOTED.
THE ORIGINAL SIZE OF THIS SHEET IS 30" X 42"
THESE DRAWINGS AND SPECIFICATIONS ARE THE PROPERTY AND COPYRIGHT OF IDS GROUP AND SHALL NOT BE USED ON ANY OTHER PROJECT OR LOCATIONS EXCEPT AS DESCRIBED ON THE DRAWINGS, WITHOUT THE WRITTEN AGREEMENT WITH IDS GROUP.

IDS PROJECT NO.	22X099.01
IDS DRAWN BY	KG
IDS CHECKED BY	JL
IDS APPROVED BY	JL

SHEET TITLE
FURNITURE DETAILS

SHEET NUMBER
LC-504
SHEET NO. 8 OF 23
CUMULATIVE SHEET NO. OF

PROGRESS SET - NOT FOR CONSTRUCTION

IDS GROUP - FILE LOCATION: \\IDS-FS1\SHARED\PROJECTS\2022\SHARED\22X099.01 LANC - EL DORADO PARK\05 CAD\11 LANDSCAPE\COURTYARD DESIGN\LC-504 FURNITURE DETAILS PLOT DATE: 9/12/2024 10:34:46 AM USER: KRISTEN.GROS

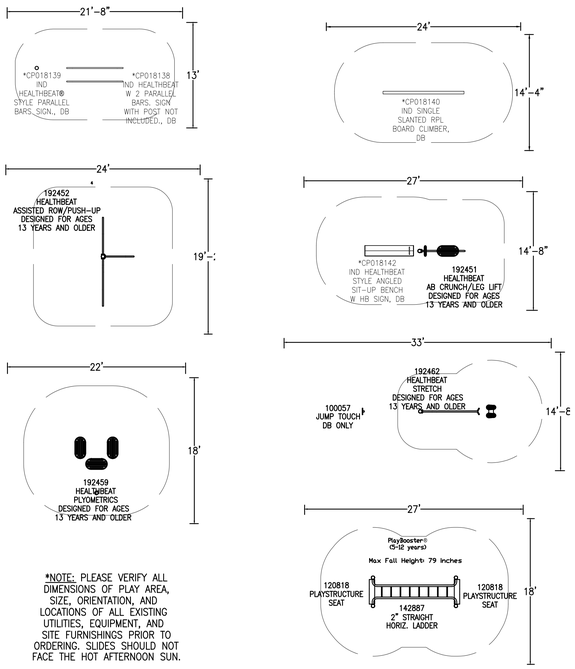

*NOTE: PLEASE VERIFY ALL DIMENSIONS OF PLAY AREA, SIZE, ORIENTATION, AND LOCATIONS OF ALL EXISTING UTILITIES, EQUIPMENT, AND SITE FURNISHINGS PRIOR TO ORDERING. SLIDES SHOULD NOT FACE THE HOT AFTERNOON SUN.

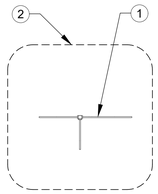

ASSISTED ROW / PUSH-UP

MAX. FALL HEIGHT: 53"
NO SCALE

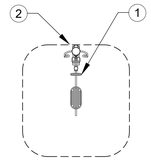

AB CRUNCH / LEG LIFT AND CHEST / BACK PRESS

MAX. FALL HEIGHT: 21" NO SCALE

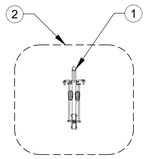

ELLIPTICAL

MAX. FALL HEIGHT: 20"
NO SCALE

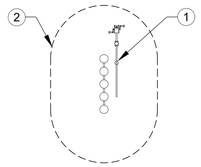

BALANCE STEPS AND HAND CYCLER - ADA

MAX. FALL HEIGHT: 16"
NO SCALE

1. EXERCISE EQUIPMENT, REFER TO MATERIALS LEGEND, SHEET LC-401.
2. SAFETY/USE BOUNDARY PER MANUFACTURER'S INSTRUCTIONS, TYP

3 ADULT FITNESS EXERCISE EQUIPMENT

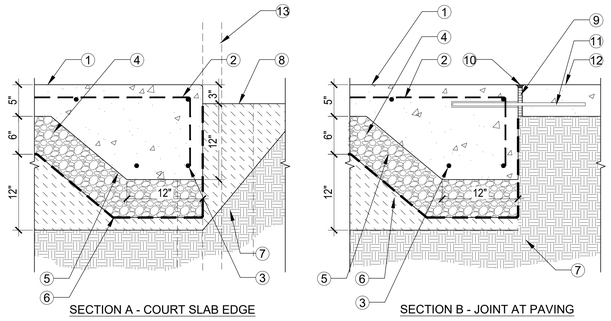

SECTION A - COURT SLAB EDGE

SECTION B - JOINT AT PAVING

1. COURT SLAB WITH DEEPENED EDGES, 1/2" RADIUS AT EXPOSED EDGES, MEDIUM BROOM FINISH.
2. #4 REBAR IN TOP 1/3 OF SLAB SPACED 18" O.C.B.W. PROVIDE MINIMUM 2" OF COVER.
3. (2) #4 REBAR CONTINUOUS.
4. CLASS 2 BASE COMPACTED PER SOILS RECOMMENDATION LETTER.
5. 15 MIL VAPOR BARRIER.
6. SCARIFY, MOISTURE CONDITION AND COMPACT SUBGRADE PER SOILS REPORT.
7. NATIVE SOIL.
8. FINISH GRADE - 1" IN TURF AREAS, 2" IN SHRUB AREAS.
9. 3/4" ELASTOMERIC EXPANSION JOINT WHERE INDICATED ON THE DRAWINGS.
10. FILL EXPANSION JOINTS AND CONTROL JOINTS WITH SELF-LEVELING FILLER COMPATIBLE WITH THE COURT SURFACING SYSTEM.
11. 1" X 14" DOWEL AND SLEEVE @ 12" O.C..
12. PEDESTRIAN PAVEMENT. REFER TO DETAIL A/LC-4.

NOTE:
PRELIMINARY PAVEMENT SECTION. TO BE REVISED UPON COMPLETION OF SOILS REPORT.

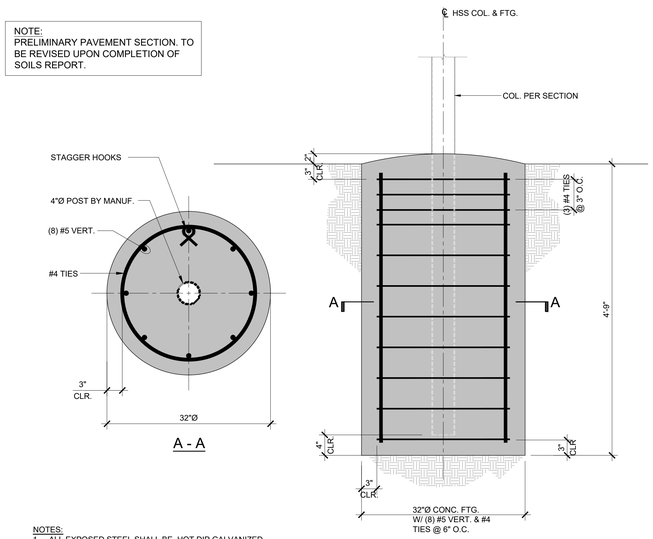

NOTES:
1. ALL EXPOSED STEEL SHALL BE HOT DIP GALVANIZED.
2. VIBRATE CONCRETE FULL DEPTH.
3. CONCRETE COMPRESSIVE STRENGTH f'm = 4,000 PSI. WATER- CEMENT RATIO = 0.45 MAX.

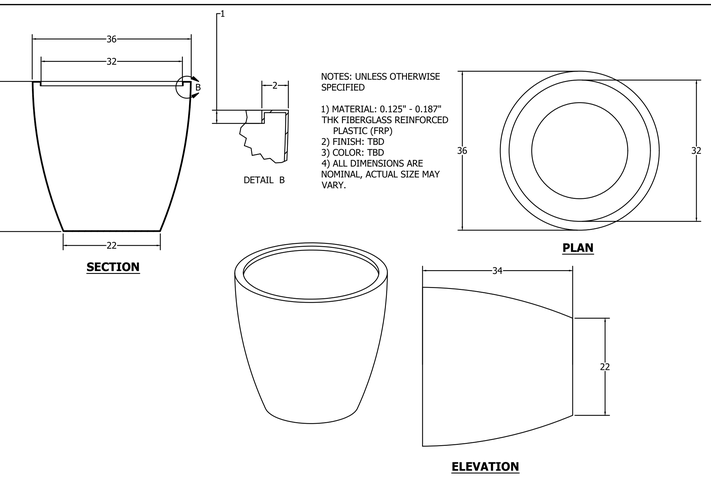

NOTES: UNLESS OTHERWISE SPECIFIED

1) MATERIAL: 0.125" - 0.187" THK FIBERGLASS REINFORCED PLASTIC (FRP)
2) FINISH: TBD
3) COLOR: TBD
4) ALL DIMENSIONS ARE NOMINAL, ACTUAL SIZE MAY VARY.

4 PLANTER POT W/ IRRIGATION SYSTEM

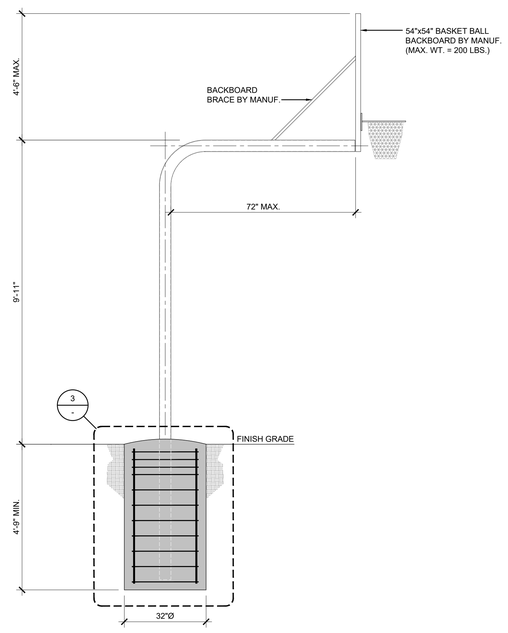

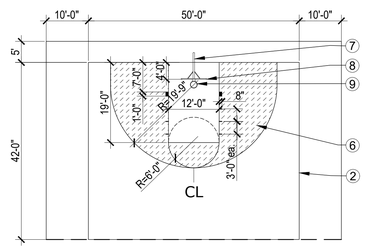

NOTES:
1. COURT SURFACING COLOR SELECTIONS PRELIMINARY ONLY. PROVIDE COLOR CHIPS FOR APPROVAL BEFORE ORDERING.
2. ALL PAVEMENTS AND JOINTING TO COMPLY WITH GEOTECHNICAL FLATWORK RECOMMENDATIONS BY ASSOCIATED SOILS ENGINEERING, INC. DATED 4/17/23 AND AMERICAN CONCRETE INSTITUTE REPORT 330R-08 *GUIDE FOR DESIGN AND CONSTRUCTION OF CONCRETE PARKING LOTS.*

1. BASKETBALL COURT SLAB WITH DEEPENED EDGES. REFER TO DETAIL 2 THIS SHEET
2. BASKETBALL COURT STRIPING: 2-INCH WIDE MEASURED TO OUTSIDE EDGE OF LINE, COLOR WHITE.
3. SAWCUT CONTROL JOINT, MIN. 2" DEPTH.
4. 2-COLOR EPOXY-BONDED SURFACING SYSTEM, PLEXIPAVE STANDARD OR APPROVED EQUAL, COARSE FINISH.
5. PLEXIPAVE COLOR 'MEDIUM GREEN'.
6. PLEXIPAVE COLOR 'DARK BLUE'.
7. 4 1/2-INCH DIA. GALV. STEEL GOALPOST WITH BRACING. INSTALL PER MANUF. DETAIL. PROVIDE FOOTING SHOP DWGS., STRUCTURAL DESIGN AND PERMITTING.
8. BACKBOARD. INSTALL PER MANUF. DETAIL.
9. DOUBLE RIM. INSTALL PER MANUF. DETAIL.
10. 3/4" EXPANSION JOINT AT MID COURT WITH SELF LEVELING FILLER COMPATIBLE WITH SURFACING SYSTEM.

1&2 HALF BASKETBALL COURT & HOOP

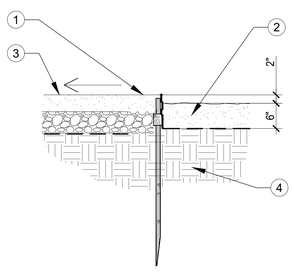

1. 1/8" X 5-1/2" ALUMINUM EDGING, CURV-RITE 3000, MILL FINISH OR APPROVED EQUAL. LOCATE MIN. 2 INCHES OUTSIDE OF EQUIPMENT SAFETY BOUNDARY.
2. PLAYGROUND WOOD CHIPS. 6" MIN. DEPTH @ EDGES. MOUND IN CENTER OF EXERCISE AREA AND SLOPE UNIFORMLY TO EDGES. SPREAD AND COMPACT PER MANUFACTURER'S SPECIFICATIONS. PROVIDE 2" FROM PLAY SURFACE (COMPACTED ENGINEERED WOOD FIBER) AND TOP OF CURB PLAY EDGE.
3. D.G. TRAIL, REFER TO PLANS AND DETAIL 3 / LC-503. SLOPE AWAY FROM EQUIPMENT STATION.
4. NATIVE GRADE COMPACTED PER SOILS REPORT.

NOTE:
MAXIMUM EQUIPMENT FALL HEIGHT OF 53"

5 ALUMINUM EDGING

APPROVAL

CITY APPROVED BY:

DIRECTOR OF PUBLIC WORKS — DATE

CITY REVIEWED BY:

SENIOR ENGINEER — DATE

SUBMITTED BY:

DATE

CLIENT

LANCASTER
Creating a better tomorrow. Together.

CITY OF LANCASTER

44933 FERN AVENUE
LANCASTER, CA 93534

PROJECT NAME

SAMARITAN'S PURSE PARK FORMERLY KNOWN AS EL DORADO PARK RENOVATION

PWCP NO. 24-008

44501 5th STREET EAST
LANCASTER, CA 93535

ENGINEER/ARCHITECT

IDS

IDS GROUP

1 PETERS CANYON ROAD, SUITE 130
IRVINE, CA. 92606
TEL: 949-387-8500, FAX: 949-387-0800

STAMP

LICENSED LANDSCAPE ARCHITECT
LYNDES L. CAMPBELL
02-26-2024
DATE
STATE OF CALIFORNIA

ISSUE

REV.	DESCRIPTION	DATE
	30% CD SET	12/15/23
	60% CD SET	01/19/24
	90% CD SET	02/26/24
1	CLIENT REVISION	04/26/24
2	BID SET	09/10/24

PROJECT IDENTIFICATION

THIS DRAWING WAS CREATED IN AUTODESK AUTOCAD V. 2021 UNLESS OTHERWISE NOTED.

THE ORIGINAL SIZE OF THIS SHEET IS 30" X 42"

THESE DRAWINGS AND SPECIFICATIONS ARE THE PROPERTY AND COPYRIGHT OF IDS GROUP AND SHALL NOT BE USED ON ANY OTHER PROJECT OR LOCATIONS EXCEPT AS DESCRIBED ON THE DRAWINGS, WITHOUT THE WRITTEN AGREEMENT WITH IDS GROUP.

IDS PROJECT NO.	22X099.01
IDS DRAWN BY	KG
IDS CHECKED BY	JL
IDS APPROVED BY	JL

SHEET TITLE

CONSTRUCTION DETAILS

SHEET NUMBER

LC-505

SHEET NO. 9 OF 23

CUMULATIVE SHEET NO. OF

PROGRESS SET - NOT FOR CONSTRUCTION

IDS GROUP - FILE LOCATION: \\IDS-FS1\SHARED\PROJECTS\2022\SHARED\22X099.01 LANC - EL DORADO PARK\05 CAD\11 LANDSCAPE\COURTYARD DESIGN\LC-505 ADULT FITNESS STATION & BASKETBALL COURT DETAILS PLOT DATE: 9/12/2024 10:31:07 AM USER: KRISTEN.GROS

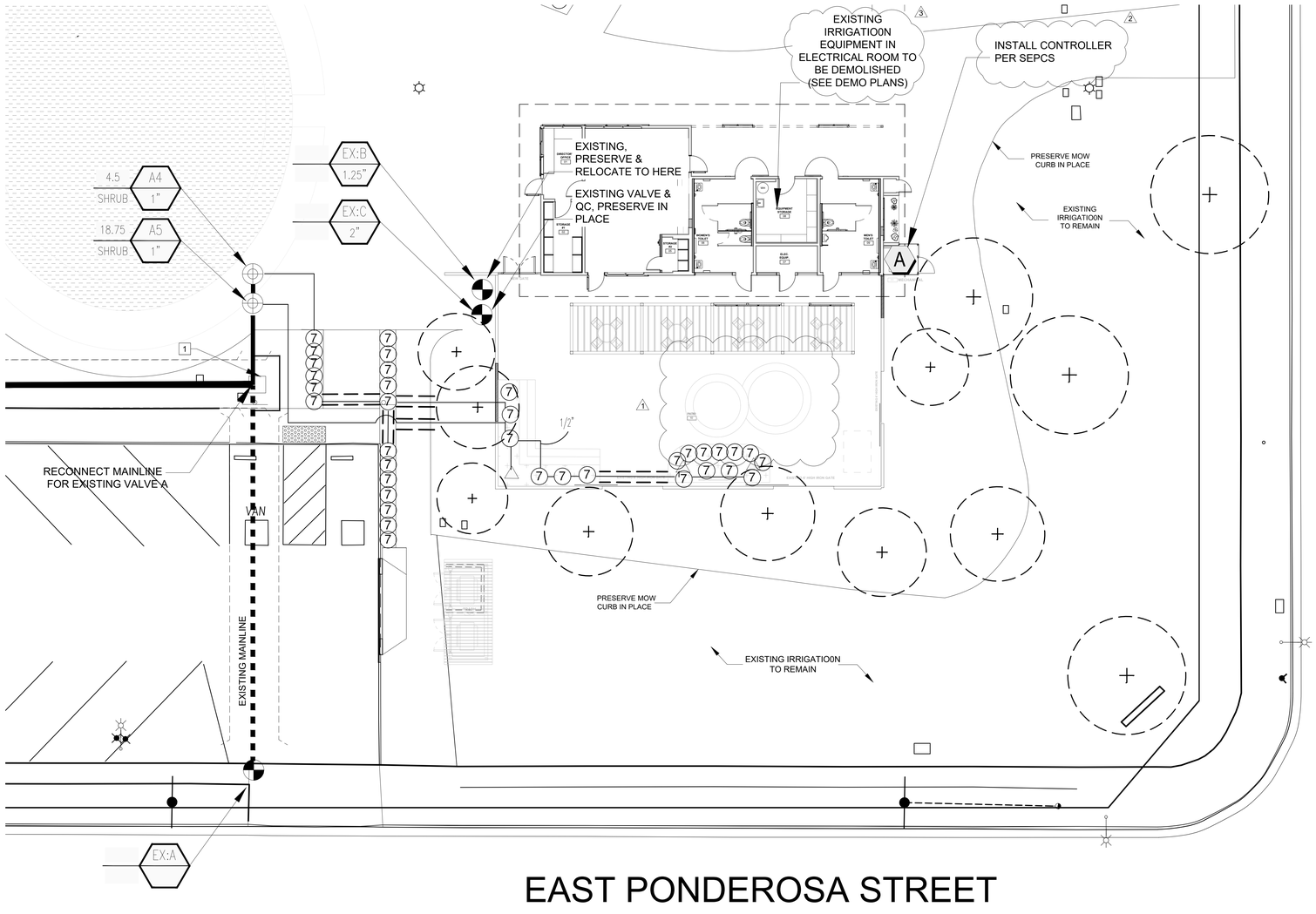

LEGEND

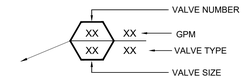

SYMBOL LEGEND

	3-INCH DOMESTIC WATER IRRIGATION SUB METER
NOT SHOWN	BOOSTER BUMP
	IRRIGATION REDUCED PRESSURE PRINCIPLE BACKFLOW PREVENTER ZURN MODE 1975 X L3, OR EQUAL
	RAINBIRD INLINE LRBY150D LARGE CAPACITY DISC FILTER
	PRESSURE REGULATING VALVE
	FLOW SENSOR
	MASTER VALVE
	PVC BALL VALVE
	QUICK COUPLER VALVE
	2" TREE BUBBLER RAINBIRD PRESSURE CONTROL VALVE ZONE KIT ASSEMBLY
	2" ROTOR SPRAY CONTROL VALVE RAINBIRD PESB 6504 ZONE KIT ASSEMBLY
	SHRUB BUBBLER CONTROL VALVE RAINBIRD PESB 6504
B	CONTROLLER / CLOCK WITH NEW 3" FLOW METER & 3" MASTER VALVE
A	IRRIGATION CONTROLLER WITH NEW 2" FLOW METER AND 2" MASTER VALVE
R	RAIN SENSOR - PER SPECS
NOT SHOWN	FLOW SENSOR WIRE - PER SPECS
	WIRE PULL BOX
	PRESSURE MAINLINE - EXISTING
	PRESSURE MAINLINE NEW SCH.40
	SLEEVES - TWICE THE DIAMETER OF THE WORKING PIPE SCHEDULE 40 PVC, ALL PIPE AND FITTINGS COLORED WHITE
	LATERAL, NEW SCH.40

SPRAY HEADS

Q	H	F		
1	2	3	RAIN BIRD	FALCON 6504 POP-UP
4	5	6	RAIN BIRD	1800 SERIES PRESSURE REGULATING 15' RADIUS

TREE & SHRUB BUBBLERS - 1400 SERIES PRESSURE REGULATING

⊙	RAIN BIRD	SHRUBS 1401 .25 GPM
△	RAIN BIRD	TREES 1408 2 GPM (2 PER SYMBOL)

KEYNOTES

1 PULL BOX CONNECTION FOR CONTROLLER WIRING IN BUILDING.

KEYPLAN

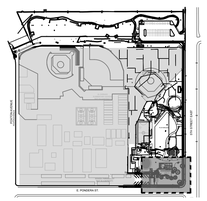

N

SCALE : 1" = 10' - 0"

IRRIGATION NOTES:

1. EXISTING VALVES A, B, C, F, G, J, J, L, M, N, O, & P ARE TO BE PRESERVED IN PLACE AND MODIFIED TO CONNECT TO THE NEW SYSTEM. THE FULL NEW AND EXISTING SYSTEM IS TO OPERATE TOGETHER TO PROVIDE FULL COVERAGE WITHOUT OVERLAP ONTO HARDSCAPE ROADWAY OF OTHER RECREATIONAL COMPONENTS.

APPROVAL

CITY APPROVED BY:

DIRECTOR OF PUBLIC WORKS DATE

CITY REVIEWED BY:

SENIOR ENGINEER DATE

SUBMITTED BY:

DATE

CLIENT

LANCASTER

Creating a better tomorrow. Together.

CITY OF LANCASTER

44933 FERN AVENUE
LANCASTER, CA 93534

PROJECT NAME

SAMARITAN'S PURSE PARK FORMERLY KNOWN AS EL DORADO PARK RENOVATION

PWCP NO. 24-008

44501 5th STREET EAST
LANCASTER, CA 93535

ENGINEER/ARCHITECT

IDS

IDS GROUP

1 PETERS CANYON ROAD, SUITE 130
IRVINE, CA. 92606
TEL: 949-387-8500, FAX: 949-387-0800

STAMP

ISSUE

REV.	DESCRIPTION	DATE
	30% CD SET	12/15/23
	60% CD SET	01/19/24
	90% CD SET	02/26/24
1	CLIENT REVISION	04/26/24
2	BID SET	09/10/24
3	BULLETIN #1	10/25/24
4	BULLETIN #1 R1	2/14/25
	COMPOSITE SET	9/24/25

PROJECT IDENTIFICATION

THIS DRAWING WAS CREATED IN AUTODESK AUTOCAD V. 2021 UNLESS OTHERWISE NOTED.

THE ORIGINAL SIZE OF THIS SHEET IS 30" X 42"

THESE DRAWINGS AND SPECIFICATIONS ARE THE PROPERTY AND COPYRIGHT OF IDS GROUP AND SHALL NOT BE USED ON ANY OTHER PROJECT OR LOCATIONS EXCEPT AS DESCRIBED ON THE DRAWINGS, WITHOUT THE WRITTEN AGREEMENT WITH IDS GROUP.

IDS PROJECT NO.	22X099.01
IDS DRAWN BY	KG
IDS CHECKED BY	JL
IDS APPROVED BY	JL

SHEET TITLE

IRRIGATION PLAN PART 1

SHEET NUMBER

LI-101

SHEET NO. 10 OF 23

CUMULATIVE SHEET NO. OF

PROGRESS SET - NOT FOR CONSTRUCTION

IDS GROUP - FILE LOCATION: \\IDS-FS1\SHARED\PROJECTS\2022\SHARED\22X099.01 LANC - EL DORADO PARK\05 CAD\11 LANDSCAPE\COURTYARD DESIGN\LI-101 IRRIGATION PLAN PART 1 PLOT DATE: 12/9/2024 11:35:47 AM USER: KRISTEN.GROS

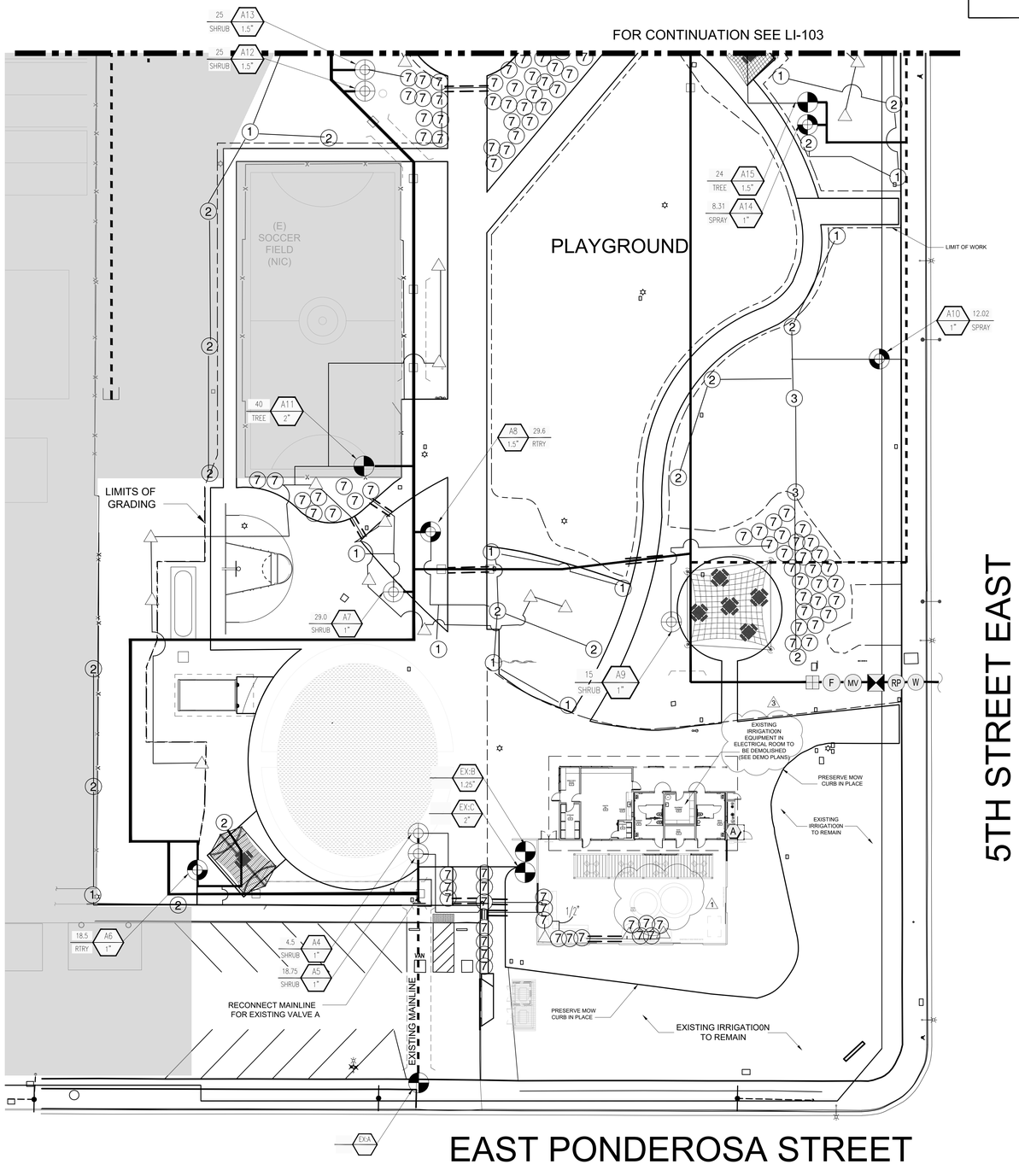

LEGEND

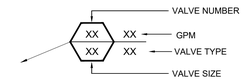

SYMBOL LEGEND

W	3-INCH DOMESTIC WATER IRRIGATION SUB METER
NOT SHOWN	BOOSTER BUMP
RP	IRRIGATION REDUCED PRESSURE PRINCIPLE BACKFLOW PREVENTER ZURN MODE 1975 X L3, OR EQUAL
	RAINBIRD INLINE LRBY150D LARGE CAPACITY DISC FILTER
	PRESSURE REGULATING VALVE
F	FLOW SENSOR
MV	MASTER VALVE
	PVC BALL VALVE
	QUICK COUPLER VALVE
	2" TREE BUBBLER RAINBIRD PRESSURE CONTROL VALVE ZONE KIT ASSEMBLY
	2" ROTOR SPRAY CONTROL VALVE RAINBIRD PESB 6504 ZONE KIT ASSEMBLY
	SHRUB BUBBLER CONTROL VALVE RAINBIRD PESB 6504
B	CONTROLLER / CLOCK WITH NEW 3" FLOW METER & 3" MASTER VALVE
A	IRRIGATION CONTROLLER WITH NEW 2" FLOW METER AND 2" MASTER VALVE
R	RAIN SENSOR - PER SPECS
NOT SHOWN	FLOW SENSOR WIRE - PER SPECS
	WIRE PULL BOX
	PRESSURE MAINLINE - EXISTING
	PRESSURE MAINLINE NEW SCH.40
	SLEEVES - TWICE THE DIAMETER OF THE WORKING PIPE SCHEDULE 40 PVC, ALL PIPE AND FITTINGS COLORED WHITE
	LATERAL, NEW SCH.40

SPRAY HEADS

Q	H	F		
1	2	3	RAIN BIRD	FALCON 6504 POP-UP
4	5	6	RAIN BIRD	1800 SERIES PRESSURE REGULATING 15' RADIUS

TREE & SHRUB BUBBLERS - 1400 SERIES PRESSURE REGULATING

7	RAIN BIRD	SHRUBS 1401 .25 GPM
△	RAIN BIRD	TREES 1408 2 GPM (2 PER SYMBOL)

KEYNOTES

1. PULL BOX CONNECTION FOR CONTROLLER WIRING IN BUILDING.

KEYPLAN

N

SCALE : 1" = 20' - 0"

IRRIGATION NOTES:

1. EXISTING VALVES A, B, C, F, G, J, J, L, M, N, O, & P ARE TO BE PRESERVED IN PLACE AND MODIFIED TO CONNECT TO THE NEW SYSTEM. THE FULL NEW AND EXISTING SYSTEM IS TO OPERATE TOGETHER TO PROVIDE FULL COVERAGE WITHOUT OVERLAP ONTO HARDSCAPE ROADWAY OF OTHER RECREATIONAL COMPONENTS.

APPROVAL

CITY APPROVED BY:

DIRECTOR OF PUBLIC WORKS — DATE

CITY REVIEWED BY:

SENIOR ENGINEER — DATE

SUBMITTED BY:

DATE

CLIENT

LANCASTER

Creating a better tomorrow. Together.

CITY OF LANCASTER

44933 FERN AVENUE
LANCASTER, CA 93534

PROJECT NAME

SAMARITAN'S PURSE PARK FORMERLY KNOWN AS EL DORADO PARK RENOVATION

PWCP NO. 24-008

44501 5th STREET EAST
LANCASTER, CA 93535

ENGINEER/ARCHITECT

IDS

IDS GROUP

1 PETERS CANYON ROAD, SUITE 130
IRVINE, CA. 92606
TEL: 949-387-8500, FAX: 949-387-0800

STAMP

REGISTERED LANDSCAPE ARCHITECT
JOSHUA LINDES LOPEZ
02-26-2024
STATE OF CALIFORNIA

ISSUE

REV.	DESCRIPTION	DATE
	30% CD SET	12/15/23
	60% CD SET	01/19/24
	90% CD SET	02/26/24
1	CLIENT REVISION	04/26/24
2	BID SET	09/10/24
3	BULLETIN #1	10/25/24
4	BULLETIN #1 R1	2/14/25
	COMPOSITE SET	9/24/25

PROJECT IDENTIFICATION

THIS DRAWING WAS CREATED IN AUTODESK AUTOCAD V. 2021 UNLESS OTHERWISE NOTED.

THE ORIGINAL SIZE OF THIS SHEET IS 30" X 42"

THESE DRAWINGS AND SPECIFICATIONS ARE THE PROPERTY AND COPYRIGHT OF IDS GROUP AND SHALL NOT BE USED ON ANY OTHER PROJECT OR LOCATIONS EXCEPT AS DESCRIBED ON THE DRAWINGS, WITHOUT THE WRITTEN AGREEMENT WITH IDS GROUP.

IDS PROJECT NO.	22X099.01
IDS DRAWN BY	KG
IDS CHECKED BY	JL
IDS APPROVED BY	JL

SHEET TITLE

IRRIGATION PLAN PART 2

SHEET NUMBER

LI-102

SHEET NO. 11 OF 23

CUMULATIVE SHEET NO. OF

PROGRESS SET - NOT FOR CONSTRUCTION

IDS GROUP - FILE LOCATION: \\IDS-FS1\SHARED\PROJECTS\2022\SHARED\22X099.01 LANC - EL DORADO PARK\05 CAD\11 LANDSCAPE\COURTYARD DESIGN\LI-102 IRRIGATION PLAN PART 2 PLOT DATE: 12/9/2024 11:38:01 AM USER: KRISTEN.GROS

LEGEND

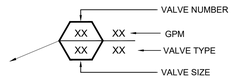

SYMBOL LEGEND

W	3-INCH DOMESTIC WATER IRRIGATION SUB METER
NOT SHOWN	BOOSTER BUMP
RP	IRRIGATION REDUCED PRESSURE PRINCIPLE BACKFLOW PREVENTER ZURN MODE 1975 X L3, OR EQUAL
	RAINBIRD INLINE LRBY150D LARGE CAPACITY DISC FILTER
	PRESSURE REGULATING VALVE
F	FLOW SENSOR
MV	MASTER VALVE
	PVC BALL VALVE
	QUICK COUPLER VALVE
	2" TREE BUBBLER RAINBIRD PRESSURE CONTROL VALVE ZONE KIT ASSEMBLY
	2" ROTOR SPRAY CONTROL VALVE RAINBIRD PESB 6504 ZONE KIT ASSEMBLY
	SHRUB BUBBLER CONTROL VALVE RAINBIRD PESB 6504
B	CONTROLLER EXISTING WITH NEW 3" FLOW METER AND 3" MASTER VALVE
A	IRRIGATION CONTROLLER WITH NEW 2" FLOW METER AND 2" MASTER VALVE
R	RAIN SENSOR - PER SPECS
NOT SHOWN	FLOW SENSOR WIRE - PER SPECS
	WIRE PULL BOX
	PRESSURE MAINLINE - EXISTING
	PRESSURE MAINLINE NEW SCH.40
	SLEEVES - TWICE THE DIAMETER OF THE WORKING PIPE SCHEDULE 40 PVC, ALL PIPE AND FITTINGS COLORED WHITE
	LATERAL, NEW SCH.40

SPRAY HEADS

Q	H	F		
1	2	3	RAIN BIRD	FALCON 6504 POP-UP
4	5	6	RAIN BIRD	1800 SERIES PRESSURE REGULATING 15' RADIUS

TREE & SHRUB BUBBLERS - 1400 SERIES PRESSURE REGULATING

7	RAIN BIRD	SHRUBS 1401 .25 GPM
△	RAIN BIRD	TREES 1408 2 GPM (2 PER SYMBOL)

FOR CONTINUATION SEE LI-104

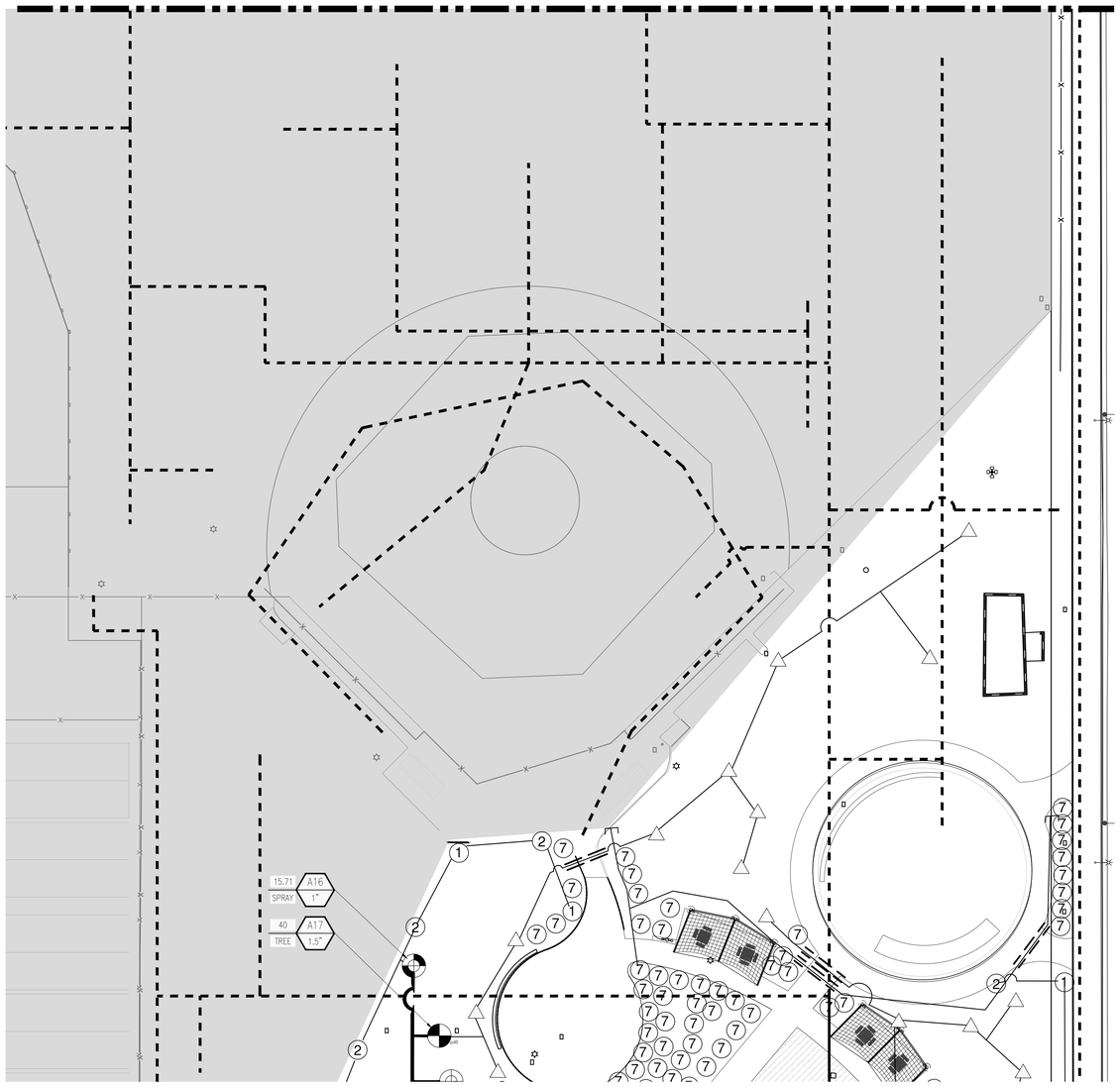

KEYNOTES

PULL BOX CONNECTION FOR CONTROLLER WIRING IN BUILDING.

KEYPLAN

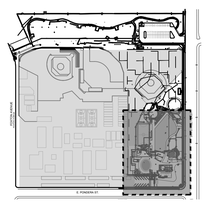

N

IRRIGATION NOTES:

1. EXISTING VALVES A, B, C, F, G, J, J, L, M, N, O, & P ARE TO BE PRESERVED IN PLACE AND MODIFIED TO CONNECT TO THE NEW SYSTEM. THE FULL NEW AND EXISTING SYSTEM IS TO OPERATE TOGETHER TO PROVIDE FULL COVERAGE WITHOUT OVERLAP ONTO HARDSCAPE ROADWAY OF OTHER RECREATIONAL COMPONENTS.

APPROVAL

CITY APPROVED BY:

DIRECTOR OF PUBLIC WORKS DATE

CITY REVIEWED BY:

SENIOR ENGINEER DATE

SUBMITTED BY:

DATE

CLIENT

LANCASTER

Creating a better tomorrow. Together.

CITY OF LANCASTER

44933 FERN AVENUE
LANCASTER, CA 93534

PROJECT NAME

SAMARITAN'S PURSE PARK FORMERLY KNOWN AS EL DORADO PARK RENOVATION

PWCP NO. 24-008

44501 5th STREET EAST
LANCASTER, CA 93535

ENGINEER/ARCHITECT

IDS

IDS GROUP

1 PETERS CANYON ROAD, SUITE 130
IRVINE, CA. 92606
TEL: 949-387-8500, FAX: 949-387-0800

STAMP

LICENSED LANDSCAPE ARCHITECT
JAMES LYNDES LOMAS
02-26-2024
STATE OF CALIFORNIA

ISSUE

REV.	DESCRIPTION	DATE
	30% CD SET	12/15/23
	60% CD SET	01/19/24
	90% CD SET	02/26/24
1	CLIENT REVISION	04/26/24
2	BID SET	09/10/24

PROJECT IDENTIFICATION

THIS DRAWING WAS CREATED IN AUTODESK AUTOCAD V. 2021 UNLESS OTHERWISE NOTED.

THE ORIGINAL SIZE OF THIS SHEET IS 30" X 42"

THESE DRAWINGS AND SPECIFICATIONS ARE THE PROPERTY AND COPYRIGHT OF IDS GROUP AND SHALL NOT BE USED ON ANY OTHER PROJECT OR LOCATIONS EXCEPT AS DESCRIBED ON THE DRAWINGS, WITHOUT THE WRITTEN AGREEMENT WITH IDS GROUP.

IDS PROJECT NO.	22X099.01
IDS DRAWN BY	KG
IDS CHECKED BY	JL
IDS APPROVED BY	JL

SHEET TITLE

IRRIGATION PLAN PART 3

SHEET NUMBER

LI-103

SHEET NO. 12 OF 23

CUMULATIVE SHEET NO. OF

PROGRESS SET - NOT FOR CONSTRUCTION

IDS GROUP - FILE LOCATION: \\IDS-FS1\SHARED\PROJECTS\2022\SHARED\22X099.01 LANC - EL DORADO PARK\05 CAD\11 LANDSCAPE\COURTYARD DESIGN\LI-103 IRRIGATION PLAN PART 3 PLOT DATE: 9/12/2024 10:32:31 AM USER: CISY.CAO

IDS GROUP - FILE LOCATION: S:\PROJECTS\2022\SHARED\22X099.01 LANC - EL DORADO PARK\05 CAD\11 LANDSCAPE\COURTYARD DESIGN\LI-104 IRRIGATION PLAN PART 4 PLOT DATE: 12/9/2024 10:37:00 AM USER: KRISTEN.GROS

LEGEND

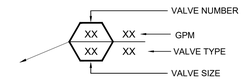

SYMBOL LEGEND

- W — 3-INCH DOMESTIC WATER IRRIGATION SUB METER
- NOT SHOWN — BOOSTER BUMP
- RP — IRRIGATION REDUCED PRESSURE PRINCIPLE BACKFLOW PREVENTER ZURN MODE 1975 X L3, OR EQUAL
- RAINBIRD INLINE LRBY150D LARGE CAPACITY DISC FILTER
- PRESSURE REGULATING VALVE
- F — FLOW SENSOR
- MV — MASTER VALVE
- PVC BALL VALVE
- QUICK COUPLER VALVE
- 2" TREE BUBBLER RAINBIRD PRESSURE CONTROL VALVE ZONE KIT ASSEMBLY
- 2" ROTOR SPRAY CONTROL VALVE RAINBIRD PESB 6504 ZONE KIT ASSEMBLY
- SHRUB BUBBLER CONTROL VALVE RAINBIRD PESB 6504
- 2 B — CONTROLLER / CLOCK WITH NEW 3" FLOW METER & 3" MASTER VALVE
- A — IRRIGATION CONTROLLER WITH NEW 2" FLOW METER AND 2" MASTER VALVE
- R — RAIN SENSOR - PER SPECS
- NOT SHOWN — FLOW SENSOR WIRE - PER SPECS
- WIRE PULL BOX
- PRESSURE MAINLINE - EXISTING
- PRESSURE MAINLINE NEW SCH.40
- SLEEVES - TWICE THE DIAMETER OF THE WORKING PIPE SCHEDULE 40 PVC, ALL PIPE AND FITTINGS COLORED WHITE
- LATERAL, NEW SCH.40

SPRAY HEADS

Q	H	F		
1	2	3	RAIN BIRD	FALCON 6504 POP-UP
4	5	6	RAIN BIRD	1800 SERIES PRESSURE REGULATING 15' RADIUS

TREE & SHRUB BUBBLERS - 1400 SERIES PRESSURE REGULATING

7	RAIN BIRD	SHRUBS 1401 .25 GPM
△	RAIN BIRD	TREES 1408 2 GPM (2 PER SYMBOL)

KEYNOTE

1. THE EXISTING IRRIGATION SYSTEM WILL BE PRESERVED IN PLACE, EXCEPT AS NOTED.
2. EXISTING 3" METER.
3. EXISTING BACKFLOW PREVENTER.
4. OUTDOOR CONTROLLER / CLOCK ON A PEDESTAL.
5. LIMIT OF GRADING.

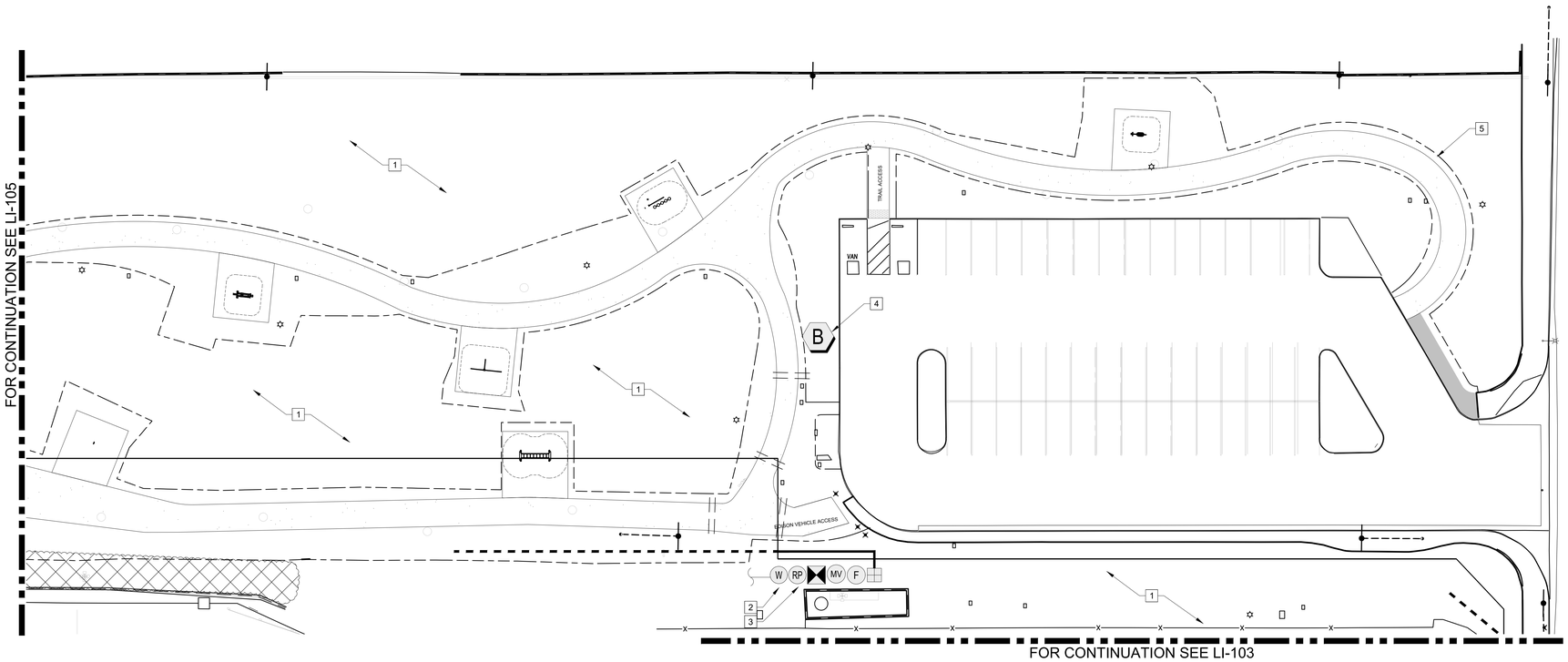

SCALE : 1" = 20' - 0"

N

IRRIGATION NOTES:

1. EXISTING VALVES A, B, C, F, G, J, J, L, M, N, O, & P ARE TO BE PRESERVED IN PLACE AND MODIFIED TO CONNECT TO THE NEW SYSTEM. THE FULL NEW AND EXISTING SYSTEM IS TO OPERATE TOGETHER TO PROVIDE FULL COVERAGE WITHOUT OVERLAP ONTO HARDSCAPE ROADWAY OF OTHER RECREATIONAL COMPONENTS.

KEYPLAN

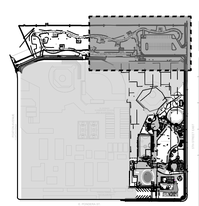

APPROVAL

CITY APPROVED BY:

DIRECTOR OF PUBLIC WORKS — DATE

CITY REVIEWED BY:

SENIOR ENGINEER — DATE

SUBMITTED BY:

DATE

CLIENT

LANCASTER

Creating a better tomorrow. Together.

CITY OF LANCASTER

44933 FERN AVENUE
LANCASTER, CA 93534

PROJECT NAME

SAMARITAN'S PURSE PARK FORMERLY KNOWN AS EL DORADO PARK RENOVATION

PWCP NO. 24-008

44501 5th STREET EAST
LANCASTER, CA 93535

ENGINEER/ARCHITECT

IDS

IDS GROUP

1 PETERS CANYON ROAD, SUITE 130
IRVINE, CA. 92606
TEL: 949-387-8500, FAX: 949-387-0800

STAMP

LICENSED LANDSCAPE ARCHITECT — JAMES LYNDES — STATE OF CALIFORNIA

ISSUE

REV.	DESCRIPTION	DATE
	30% CD SET	12/15/23
	60% CD SET	01/19/24
	90% CD SET	02/26/24
1	CLIENT REVISION	04/26/24
2	BID SET	09/10/24
3	BULLETIN #1	10/25/24
4	BULLETIN #1 R1	2/14/25
	COMPOSITE SET	9/24/25

PROJECT IDENTIFICATION

THIS DRAWING WAS CREATED IN AUTODESK AUTOCAD V. 2021 UNLESS OTHERWISE NOTED.

THE ORIGINAL SIZE OF THIS SHEET IS 30" X 42"

THESE DRAWINGS AND SPECIFICATIONS ARE THE PROPERTY AND COPYRIGHT OF IDS GROUP AND SHALL NOT BE USED ON ANY OTHER PROJECT OR LOCATIONS EXCEPT AS DESCRIBED ON THE DRAWINGS, WITHOUT THE WRITTEN AGREEMENT WITH IDS GROUP.

IDS PROJECT NO.	22X099.01
IDS DRAWN BY	KG
IDS CHECKED BY	JL
IDS APPROVED BY	JL

SHEET TITLE

IRRIGATION PLAN PART 4

SHEET NUMBER

LI-104

SHEET NO. 13 OF 23

CUMULATIVE SHEET NO. OF

PROGRESS SET - NOT FOR CONSTRUCTION

IDS GROUP - FILE LOCATION: \\IDS-FS1\SHARED\PROJECTS\2022\SHARED\22X099.01 LANC - EL DORADO PARK\05 CAD\11 LANDSCAPE\COURTYARD DESIGN\LI-105 IRRIGATION PLAN PART 5 PLOT DATE: 9/12/2024 10:35:31 AM USER: CISY.CAO

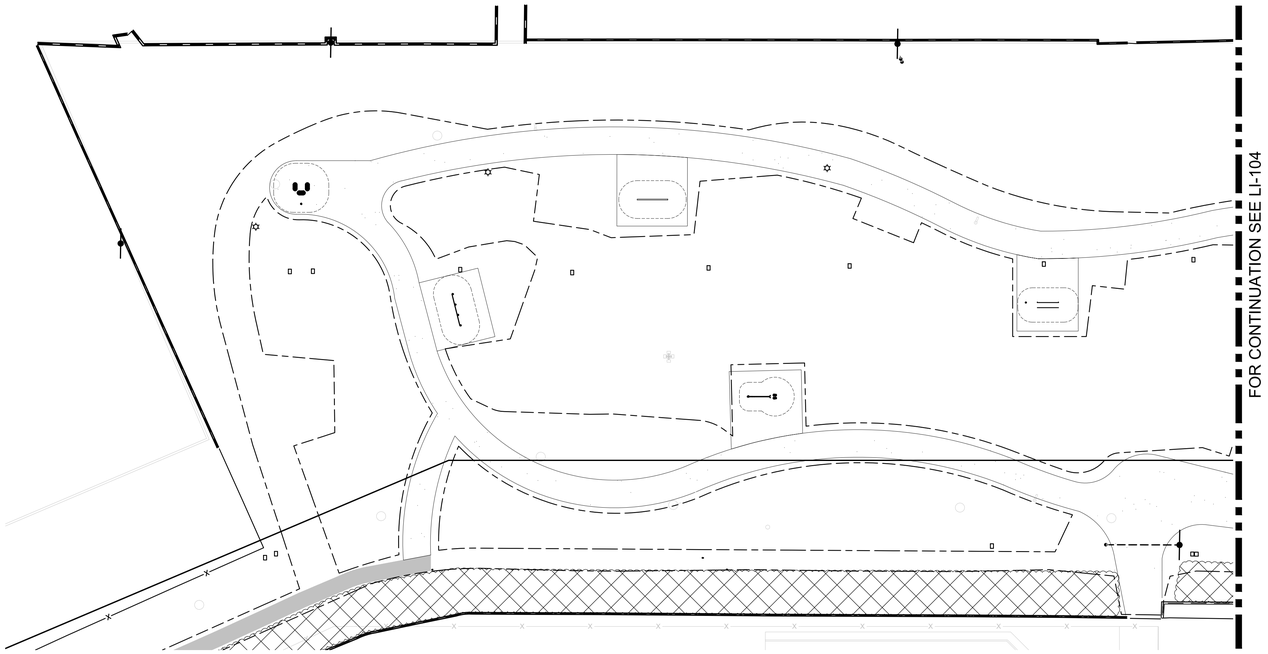

LEGEND

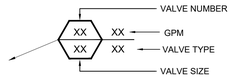

SYMBOL LEGEND

W	3-INCH DOMESTIC WATER IRRIGATION SUB METER
NOT SHOWN	BOOSTER BUMP
RP	IRRIGATION REDUCED PRESSURE PRINCIPLE BACKFLOW PREVENTER ZURN MODE 1975 X L3, OR EQUAL
	RAINBIRD INLINE LRBY150D LARGE CAPACITY DISC FILTER
	PRESSURE REGULATING VALVE
F	FLOW SENSOR
MV	MASTER VALVE
	PVC BALL VALVE
	QUICK COUPLER VALVE
	2" TREE BUBBLER RAINBIRD PRESSURE CONTROL VALVE ZONE KIT ASSEMBLY
	2" ROTOR SPRAY CONTROL VALVE RAINBIRD PESB 6504 ZONE KIT ASSEMBLY
	SHRUB BUBBLER CONTROL VALVE RAINBIRD PESB 6504
B	CONTROLLER EXISTING WITH NEW 3" FLOW METER AND 3" MASTER VALVE
A	IRRIGATION CONTROLLER WITH NEW 2" FLOW METER AND 2" MASTER VALVE
R	RAIN SENSOR - PER SPECS
NOT SHOWN	FLOW SENSOR WIRE - PER SPECS
	WIRE PULL BOX
	PRESSURE MAINLINE - EXISTING
	PRESSURE MAINLINE NEW SCH.40
	SLEEVES - TWICE THE DIAMETER OF THE WORKING PIPE SCHEDULE 40 PVC, ALL PIPE AND FITTINGS COLORED WHITE
	LATERAL, NEW SCH.40

SPRAY HEADS

Q	H	F		
1	2	3	RAIN BIRD	FALCON 6504 POP-UP
4	5	6	RAIN BIRD	1800 SERIES PRESSURE REGULATING 15' RADIUS

TREE & SHRUB BUBBLERS - 1400 SERIES PRESSURE REGULATING

7	RAIN BIRD	SHRUBS 1401 .25 GPM
△	RAIN BIRD	TREES 1408 2 GPM (2 PER SYMBOL)

KEYNOTE

THE EXISTING IRRIGATION SYSTEM WILL BE PRESERVED IN PLACE, EXCEPT AS NOTED.

LIMIT OF GRADING

IRRIGATION NOTES:

1. EXISTING VALVES A, B, C, F, G, J, J, L, M, N, O, & P ARE TO BE PRESERVED IN PLACE AND MODIFIED TO CONNECT TO THE NEW SYSTEM. THE FULL NEW AND EXISTING SYSTEM IS TO OPERATE TOGETHER TO PROVIDE FULL COVERAGE WITHOUT OVERLAP ONTO HARDSCAPE ROADWAY OF OTHER RECREATIONAL COMPONENTS.

KEYPLAN

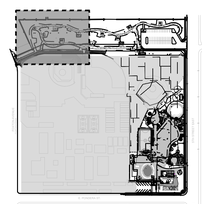

APPROVAL

CITY APPROVED BY:

DIRECTOR OF PUBLIC WORKS DATE

CITY REVIEWED BY:

SENIOR ENGINEER DATE

SUBMITTED BY:

DATE

CLIENT

LANCASTER

Creating a better tomorrow. Together.

CITY OF LANCASTER

44933 FERN AVENUE
LANCASTER, CA 93534

PROJECT NAME

SAMARITAN'S PURSE PARK FORMERLY KNOWN AS EL DORADO PARK RENOVATION

PWCP NO. 24-008

44501 5th STREET EAST
LANCASTER, CA 93535

ENGINEER/ARCHITECT

IDS

IDS GROUP

1 PETERS CANYON ROAD, SUITE 130
IRVINE, CA. 92606
TEL: 949-387-8500, FAX: 949-387-0800

STAMP

REGISTERED LANDSCAPE ARCHITECT
JAMES LYNDES LINDSAY
No. 5126
02-26-2025
STATE OF CALIFORNIA

ISSUE

REV.	DESCRIPTION	DATE
	30% CD SET	12/15/23
	60% CD SET	01/19/24
	90% CD SET	02/26/24
1	CLIENT REVISION	04/26/24
2	BID SET	09/10/24

PROJECT IDENTIFICATION

THIS DRAWING WAS CREATED IN AUTODESK AUTOCAD V. 2021 UNLESS OTHERWISE NOTED.

THE ORIGINAL SIZE OF THIS SHEET IS 30" X 42"

THESE DRAWINGS AND SPECIFICATIONS ARE THE PROPERTY AND COPYRIGHT OF IDS GROUP AND SHALL NOT BE USED ON ANY OTHER PROJECT OR LOCATIONS EXCEPT AS DESCRIBED ON THE DRAWINGS, WITHOUT THE WRITTEN AGREEMENT WITH IDS GROUP.

IDS PROJECT NO.	22X099.01
IDS DRAWN BY	KG
IDS CHECKED BY	JL
IDS APPROVED BY	JL

SHEET TITLE

IRRIGATION PLAN PART 5

SHEET NUMBER

LI-105

SHEET NO. 14 OF 23

CUMULATIVE SHEET NO. OF

PROGRESS SET - NOT FOR CONSTRUCTION

IRRIGATION NOTES:

1. THE CONTRACTOR SHALL REVIEW RELATED DRAWINGS AND SHALL ENSURE COORDINATION WITH ALL APPLICABLE TRADES PRIOR TO SUBMITTING BID.
2. THE IRRIGATION SYSTEM SHALL BE INSTALLED IN CONFORMANCE WITH ALL APPLICABLE STATE AND LOCAL CODES AND ORDINANCES BY LICENSED CONTRACTORS AND EXPERIENCED WORKMEN. CONTRACTOR SHALL OBTAIN AND PAY FOR ALL REQUIRED PERMITS AND FEES RELATING TO HIS WORK.
3. THIS DESIGN IS DIAGRAMMATIC. ALL PIPING, VALVES, ETC. SHOWN WITHIN PAVED AREAS IS FOR DESIGN CLARIFICATION ONLY AND SHALL BE INSTALLED IN PLANTING AREAS WHERE POSSIBLE. AVOID ANY CONFLICTS BETWEEN THE SPRINKLER SYSTEM, PLANTING AND ARCHITECTURAL FEATURES. PARALLEL PIPES MAY BE INSTALLED IN COMMON TRENCH. PIPES ARE NOT TO BE INSTALLED DIRECTLY ABOVE ONE ANOTHER.
4. THE EXISTING STATIC PRESSURE IN THE WATER MAIN SERVICE LINE IS ASSUMED TO BE APPROXIMATELY 56 PSI.
5. STATIC WATER PRESSURE, DYNAMIC OR OPERATING PRESSURE AND FLOW READING OF THE WATER SUPPLY SHALL BE MEASURED AT THE POINT OF CONNECTION DURING CONSTRUCTION. IF PRESSURES DIFFER FROM THIS THE LANDSCAPE ARCHITECT OR OWNER'S REPRESENTATIVE SHALL BE CONTACTED IMMEDIATELY AND BEFORE THE IRRIGATION SYSTEM IS INSTALLED.
6. IT IS THE RESPONSIBILITY OF THE IRRIGATION CONTRACTOR TO FAMILIARIZE HIMSELF WITH ALL GRADE DIFFERENCES, LOCATION OF WALLS, RETAINING WALLS, ETC. HE SHALL COORDINATE HIS WORK WITH THE GENERAL CONTRACTOR AND OTHER SUBCONTRACTORS FOR THE LOCATION AND THE INSTALLATION OF PIPE SLEEVES THROUGH WALLS, UNDER ROADWAYS, PAVING, STRUCTURES, ETC. CONTRACTOR TO VERIFY THE LOCATION OF EXISTING UNDERGROUND UTILITIES AND STRUCTURES PRIOR TO THE EXCAVATION OF TRENCHES. CONTRACTOR IS TO REPAIR ANY DAMAGE CAUSED BY HIS WORK AT NO ADDITIONAL COST TO THE OWNER.
7. DUE TO THE SCALE OF THE DRAWINGS, IT IS NOT POSSIBLE TO INDICATE ALL OFFSETS, FITTINGS, SLEEVES, ETC., WHICH MAY BE REQUIRED. THE CONTRACTOR SHALL CAREFULLY INVESTIGATE THE STRUCTURAL AND FINISHED CONDITIONS AFFECTING ALL OF HIS WORK AND PLAN HIS WORK ACCORDINGLY, FURNISHING SUCH FITTINGS, ETC., AS MAY BE REQUIRED TO MEET SUCH CONDITIONS. DRAWINGS ARE GENERALLY DIAGRAMMATIC AND INDICATIVE OF THE WORK TO BE INSTALLED. THE WORK SHALL BE INSTALLED IN SUCH A MANNER AS TO AVOID CONFLICTS BETWEEN IRRIGATION SYSTEMS, PLANTING, AND ARCHITECTURAL FEATURES.
8. INSTALL VALVE BOXES MINIMUM 12" FROM AND PERPENDICULAR TO WALK, CURB, BUILDING OR LANDSCAPE FEATURE. AT MULTIPLE VALVE BOX GROUPS, EACH BOX SHALL BE AN EQUAL DISTANCE FROM THE WALK, CURB, ETC. AND EACH BOX SHALL BE MINIMUM 12" APART. SHORT SIDE OF VALVE BOXES SHALL BE PARALLEL TO WALK, CURB, ETC.
9. LOCATE QUICK COUPLING VALVE 12" FROM HARDSCAPE AREA.
10. ALL MAIN LINES SHALL BE FLUSHED PRIOR TO THE INSTALLATION OF IRRIGATION. AT 30 DAYS AFTER INSTALLATION EACH SYSTEM SHALL BE FLUSHED TO ELIMINATE GLUE AND DIRT PARTICLES FROM THE LINES.
11. NOTIFY LANDSCAPE ARCHITECT OF ANY ASPECTS OF LAYOUT THAT WILL PROVIDE INCOMPLETE OR INSUFFICIENT WATER COVERAGE OF PLANT MATERIAL AND DO NOT PROCEED UNTIL HER INSTRUCTIONS ARE OBTAINED.
12. IN ADDITION TO THE SLEEVES AND CONDUITS SHOWN ON THE DRAWINGS, THE IRRIGATION CONTRACTOR SHALL BE RESPONSIBLE FOR THE INSTALLATION OF SLEEVES AND CONDUITS OF SUFFICIENT SIZE UNDER ALL PAVED AREAS.
13. ALL EXCAVATIONS ARE TO BE FILLED WITH COMPACTED BACKFILL PER DETAILS. CONTRACTOR TO REPAIR ALL SETTLED TRENCHES PROMPTLY, FOR A PERIOD OF 1 YEAR AFTER COMPLETION OF WORK. ADDITIONALLY, CONTRACTOR SHALL WARRANT THAT THE IRRIGATION SYSTEM WILL BE FREE FROM DEFECTS IN MATERIALS AND WORKMANSHIP FOR A PERIOD OF 1 YEAR AFTER FINAL ACCEPTANCE OF WORK.
14. THE SYSTEM DESIGN IS BASED ON THE MINIMUM OPERATING PRESSURE SHOWN ON THE IRRIGATION DRAWINGS. THE IRRIGATION CONTRACTOR SHALL VERIFY WATER PRESSURE PRIOR TO CONSTRUCTION. REPORT ANY DIFFERENCE BETWEEN THE WATER PRESSURE INDICATED ON THE DRAWINGS AND THE ACTUAL PRESSURE READING AT THE IRRIGATION POINT OF CONNECTION TO THE OWNER'S AUTHORIZED REPRESENTATIVE.
15. IRRIGATION DEMAND: REFER TO VALVE CALL OUTS ON PLAN.
16. THE CONTRACTOR SHALL NOTIFY UNDERGROUND SERVICE ALERT AT 811 AT LEAST 48 HOURS PRIOR TO ANY EXCAVATION.
17. REVIEWED AND APPROVED BY THE LANDSCAPE ARCHITECT. ACTUAL LAYOUT OF EMITTER SYSTEM SHALL BE DETERMINED BY THE CONTRACTOR IN THE FIELD USING THE IRRIGATION PLAN AND THE DRIP IRRIGATION DETAILS AS A GUIDE, WHILE USING THE PLANTING PLAN FOR THE LOCATION AND QUANTITIES OF EMITTERS.
18. INSTALL FLUSH PLUGS AT THE END OF THE RIGID PVC AS SHOWN ON PLANS. THOROUGHLY FLUSH EACH INSTALLATION SEGMENT TO ENSURE NO DEBRIS CONTAMINATION OCCURS.
19. PVC SUPPLY AND FLUSH LINE SIZING GUIDE (ALL SUPPLY AND FLUSH LINES SHALL BE THE SAME SIZE FOR THE ENTIRE ZONE:
    A. 0-4 GPM-1/2"
    B. 0-8 GPM – 3/4"
    C. 8.1-15 GPM – 1"
    D. 15.1-25 GPM – 1 1/4"

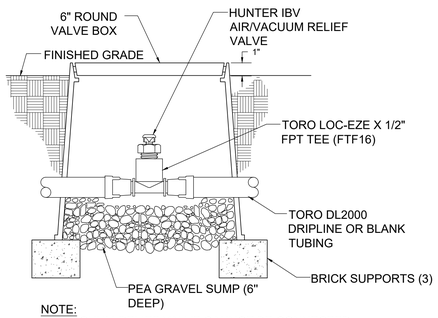

NOTE:
AIR/VACUUM RELIEF VALVE CANNOT BE CONNECTED LOWER THAN DRIPLINE LATERALS.

C AIR/VACUUM RELIEF VALVE — N.T.S. — SECTION

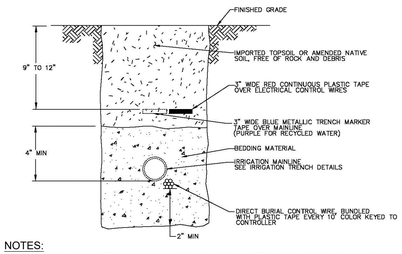

NOTES:
1. BEDDING MATERIAL SHALL BE SE 50 PLASTER OR MORTAR SAND.
2. WIRES WHICH RUN UNDER PAVED AREAS SHALL BE INSTALLED IN PVC CONDUIT TWICE THE DIAMETER OF THE WIRE BUNDLE (2" MINIMUM SIZE), EXTENDING 12" MINIMUM BEYOND EDGE OF PAVEMENT.
3. THE LETTER E SHALL BE STAMPED OR CHISELED ON THE IMPROVEMENT (CURB-SIDEWALK) DIRECTLY ABOVE THE CONTROL WIRE/ CABLE.
4. WHEN CONTROL WIRING CANNOT BE INSTALLED IN A PIPE TRENCH, IT SHALL BE INSTALLED A MINIMUM 18" BELOW FINISH GRADE BUNDLED WITH PLASTIC TAPE.

A CONTROL WIRE INSTALLATION — N.T.S. — -

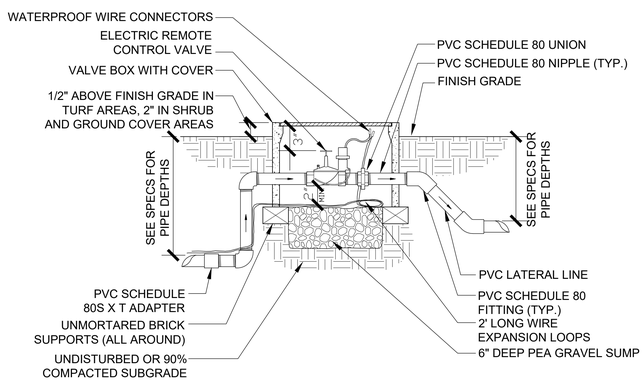

D REMOTE CONTROL VALVE — N.T.S. — SECTION
RAINBIRD PEB INLINE OR APPROVED EQUAL

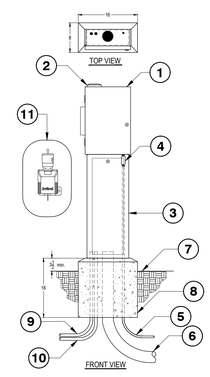

NOTE:
MINIMUM CONCRETE BASE REQUIREMENTS: CONTRACTOR SHALL VERIFY NUMBER & SIZE OF CONDUITS REQUIRED FOR EACH ENCLOSURE. USE MOUNTING TEMPLATE TO LOCATE "J" BOLT FASTENERS.

SEE IRRIGATION DRAWINGS FOR ENCLOSURE DIMENSIONS & FINISH.

1. WEATHERTRAK ET PRO3 SERIES CONTROLLER
2. LOW PROFILE ANTENNA
3. WEATHERTRAK ENCLOSURE PEDESTAL
4. APPROVED ELECTRICAL JUNCTION BOX OR CONDULET
5. 1" PVC OR RIGID CONDUIT & CONDUIT SWEEP FOR120VAC WIRING
6. PVC CONDUIT & CONDUIT SWEEP FOR VALVE WIRING
7. FINISH GRADE
8. POURED-IN-PLACE CONCRETE BASE WITH SLOPED EDGES FOR DRAINAGE AWAY FROM PEDESTAL
9. 1" PVC CONDUIT & CONDUIT SWEEP FOR FLOW SENSOR WIRING AND MASTER VALVE WIRING
10. 1" PVC CONDUIT & CONDUIT SWEEP FOR #6 BARE COPPER GROUND WIRE
11. RAIN SENSOR PER SPECS (WIRELESS SHOWN)

B WEATHERTRAK ET PRO3 PEDESTAL MOUNT OUTDOOR
NTS — P-CO-31

APPROVAL

CITY APPROVED BY:
DIRECTOR OF PUBLIC WORKS — DATE
CITY REVIEWED BY:
SENIOR ENGINEER — DATE
SUBMITTED BY:
DATE

CLIENT
LANCASTER
Creating a better tomorrow. Together.
CITY OF LANCASTER
44933 FERN AVENUE
LANCASTER, CA 93534

PROJECT NAME
SAMARITAN'S PURSE PARK FORMERLY KNOWN AS EL DORADO PARK RENOVATION
PWCP NO. 24-008
44501 5th STREET EAST
LANCASTER, CA 93535

ENGINEER/ARCHITECT
IDS
IDS GROUP
1 PETERS CANYON ROAD, SUITE 130
IRVINE, CA. 92606
TEL: 949-387-8500, FAX: 949-387-0800

STAMP
REGISTERED LANDSCAPE ARCHITECT — LYNDES L. LOA — REGISTERED — 02-26-2024 — DATE — STATE OF CALIFORNIA

ISSUE

REV.	DESCRIPTION	DATE
	30% CD SET	12/15/23
	60% CD SET	01/19/24
	90% CD SET	02/26/24
1	CLIENT REVISION	04/26/24
2	BID SET	09/10/24

PROJECT IDENTIFICATION
THIS DRAWING WAS CREATED IN AUTODESK AUTOCAD V. 2021 UNLESS OTHERWISE NOTED.
THE ORIGINAL SIZE OF THIS SHEET IS 30" X 42"
THESE DRAWINGS AND SPECIFICATIONS ARE THE PROPERTY AND COPYRIGHT OF IDS GROUP AND SHALL NOT BE USED ON ANY OTHER PROJECT OR LOCATIONS EXCEPT AS DESCRIBED ON THE DRAWINGS, WITHOUT THE WRITTEN AGREEMENT WITH IDS GROUP.

IDS PROJECT NO.	22X099.01
IDS DRAWN BY	KG
IDS CHECKED BY	JL
IDS APPROVED BY	JL

SHEET TITLE
IRRIGATION DETAILS

SHEET NUMBER
LI-502
SHEET NO. 15 OF 23
CUMULATIVE SHEET NO. OF

PROGRESS SET - NOT FOR CONSTRUCTION

IDS GROUP - FILE LOCATION: \\IDS-FS1\SHARED\PROJECTS\2022\SHARED\22X099.01 LANC - EL DORADO PARK\05 CAD\11 LANDSCAPE\COURTYARD DESIGN\LI-502 IRRIGATION DETAILS PLOT DATE: 9/12/2024 10:33:58 AM USER: CISY.CAO

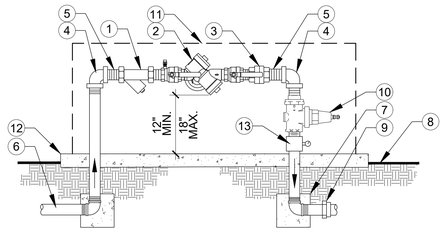

1. LINE SIZE WYE STRAINER.
2. REDUCED PRESSURE BACKFLOW DEVICE WITH 2 BALL VALVES. REFER TO IRRIGATION LEGEND.
3. BRASS UNION.
4. BRASS ELL (TYPICAL).
5. BRASS NIPPLE (TYPICAL).
6. BRASS MAINLINE FROM METER.
7. 1 CU.FT. CONCRETE THRUST BLOCKS (TYPICAL). WRAP PIPES W/ 10 MIL. TAPE. SATURATE AND COMPACT SUB-GRADE TO 90% PRIOR TO POUR.
8. FINISH GRADE.
9. PVC MALE ADAPTER.
10. PRESSURE REGULATOR PER LEGEND.
11. ENCLOSURE PER LEGEND.
12. 4" NOM CONCRETE SLAB, EXTEND 6" BEYOND ENCLOSURE ALL SIDES.
13. BRASS TEE W/ BRASS REDUCER AND GLYCERINE FILLED PRESSURE GAUGE.

A REDUCED PRESSURE PRINCIPLE BACKFLOW ASSEMBLY N.T.S.

1. WEATHERTRAK ET PRO3 SERIES CONTROLLER WITHIN VANDAL RESISTANT POWDER COATED COLD ROLLED STEEL WALL MOUNT ENCLOSURE ASSEMBLY W/ KEY- LOCK. SEE SPECS FOR SIZE AND FINISH.
2. #6 COPPER GROUND WIRE IN CONDUIT. CONNECT TO BUILDING GROUND AS REQUIRED PER ASIC GUIDELINES.
3. 1-1/2" PVC SCH. 40 CONTROL WIRE CONDUIT.
4. FINISH GRADE IN LANDSCAPE AREA.
5. 1-1/2" PVC LONG SWEEP ELL AND CONDUIT . - SIZE AS REQUIRED.
6. LOW VOLTAGE CONTROL WIRING FROM AUTOMATIC CONTROLLER TO ELECTRIC CONTROL VALVES.
7. WALL SURFACE. ANCHOR CONTROLLER TO WALL PER MANUFACTURER'S RECOMMENDATIONS.
8. "J" BOX FOR 120 VOLT CONNECTION TO CONTROLLER TRANSFORMER.
9. LOW PROFILE ANTENNA.
10. CONTROLLER TRANSFORMER.
11. RAIN SENSOR PER SPECS (WIRELESS SHOWN)
12. 3/4" PVC SWEEP ELL AND CONDUIT FOR FLOW SENSOR CABLE AND MASTER VALVE WIRES.
13. FLOW SENSOR CABLE AND MASTER VALVE WIRES PER SPECIFICATIONS.

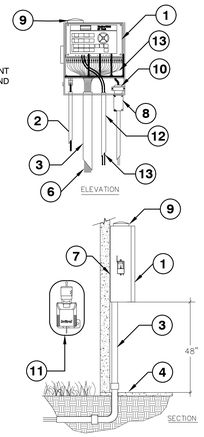

B WEATHERTRAK ET PRO3 WALL MOUNT INDOOR

P-CO-40

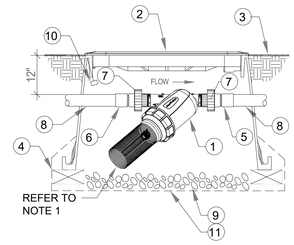

1. 1.5" RAIN BIRD LARGE CAPACITY DISC FILTER
2. VALVE BOX WITH COVER, HEAT STAMP "DF" ON LID
3. FINISH GRADE/TOP OF MULCH
4. BRICK (1 OF 4)
5. PVC SCH 40 FEMALE ADAPTER
6. PVC SCH 40 MALE ADAPTER
7. PVC SCH 40 THREADED UNION, ONE EACH SIDE OF FILTER
8. PVC LATERAL PIPE
9. 4" MIN. DEPTH OF 3/8" WASHED PEA GRAVEL.
10. RECYCLED WATER WARNING TAG IN ENGLISH AND SPANISH.
11. #4 MESH, GALV, WELDED, 23 GA. FABRIC GOPHER BARRIER, WRAP MIN.3 INCHES UP VALVE BOX.

NOTE:

1. FILTER ASSEMBLY TO BE INSTALLED WITH SCREEN DIRECTION FACING A 45° DOWNWARD ANGLE WITH ENOUGH SPACE TO REMOVE SCREEN FOR MAINTENANCE. SOME APPLICATIONS MAY REQUIRE VALVE BOX EXTENSIONS OR A LARGER BOX TO ACHIEVE ACCEPTABLE SCREEN CLEARANCE.
2. ALL VALVES OPERATING MP ROTATOR HEADS SHALL INCLUDE A 120 MESH OR DISK FILTER.

C DISC FILTER IN VALVE BOX N.T.S.

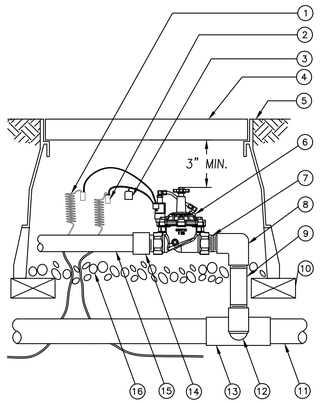

1. 30-INCH LINEAR LENGTH WIRE, COILED
2. WATERPROOF CONNECTION
3. ID TAG
4. VALVE BOX WITH COVER
5. FINISH GRADE/TOP OF MULCH
6. CONTROL VALVE: SUPERIOR 3100 SERIES VALVE
7. PVC SCH 80 NIPPLE (CLOSE)
8. PVC SCH 40 ELL
9. PVC SCH 80 NIPPLE (AS REQD LENGTH)
10. BRICK (1 OF 4)
11. PVC MAINLINE PIPE
12. SCH 80 NIPPLE (2-INCH LENGTH, HIDDEN) AND SCH 40 ELL
13. PVC SCH 40 TEE OR ELL
14. PVC SCH 40 MALE ADAPTER
15. PVC LATERAL PIPE
16. 3-INCH MINIMUM DEPTH OF 3/4-INCH WASHED GRAVEL

D MASTER VALVE N.T.S.

NTS

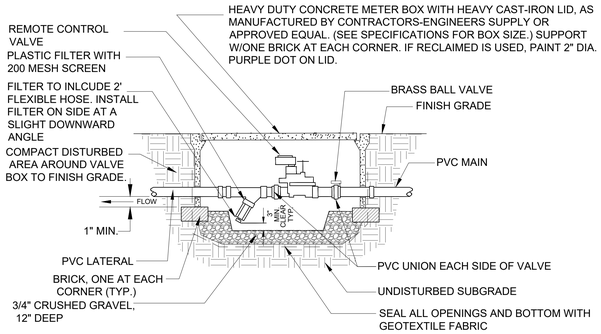

E REMOTE CONTROL VALVE AND FILTER ASSEMBLY N.T.S.

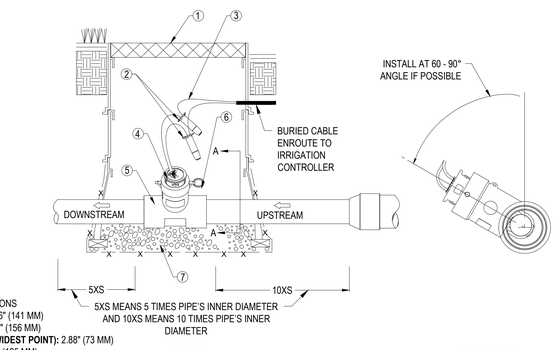

SPECIFICATIONS
LENGTH: 5.56" (141 MM)
HEIGHT: 6.12" (156 MM)
WIDTH (AT WIDEST POINT): 2.88" (73 MM)
DEPTH: 4.94" (125 MM)

LEGEND:
1. PLASTIC VALVE BOX TO PROVIDE ACCESS.
2. 3M DBR/Y-6 SPLICE KIT OR EQUIVALENT DIRECT BURIAL SPLICE KIT
3. DIRECT BURIAL 1 PAIR, TWISTED SHIELDED CABLE. RECOMMENDED MINIMUM CONDUCTER SIZE 18 AWG. RATED FOR DISTANCES UP TO 2,000 FT (610 M). ENSURE A SERVICE LOOP (EXTRA WIRE LENGTH) IS PROVIDED AT THE FLOW SENSOR IN CASE MAINTENANCE IS NEEDED
4. QS200 - 20 ULTRASONIC FLOW SENSOR
5. TEE COMPATIBLE WITH QS200 (FLOMEC QS200 TEE RECOMMENDED FOR BEST RESULTS). SELECT TEE SIZE PER APPLICATION FLOW RATES REQUIRED
6. QUICK RELEASE PIN
7. GRAVEL - GRAVEL SHALL BE PLACED AT BOTTOM OF QS200 TEE AND SHALL BE A MINIMUM OF 10-INCH THICK (10-INCH DEEP)

MANUFACTURER NOTES
- FOR 1-INCH THRU 4-INCH PIPE INSTALLATIONS, THIS ANGLE IS ESPECIALLY IMPORTANT AND SHOULD BE SET AT 60-90 DEGREES FOR MOST ACCURATE QS200 OPERATION

F FLOW SENSOR N.T.S.

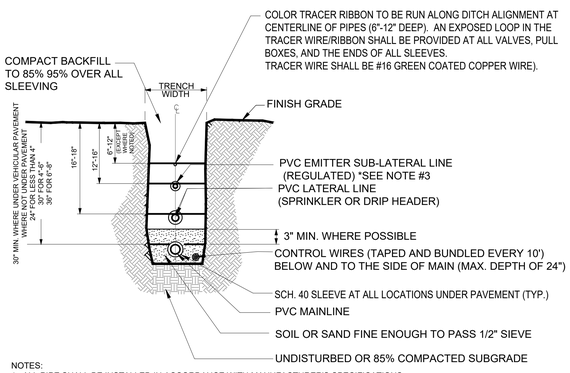

NOTES:
1. ALL PIPE SHALL BE INSTALLED IN ACCORDANCE WITH MANUFACTURER'S SPECIFICATIONS.
2. NO PIPE OR WIRE SHALL BE LOCATED UNDER PAVING UNLESS IT IS SLEEVED.
3. DEPTH OF TREE SUB-LATERALS ALONG IRRIGATION DITCH MAY BE MINIMUM OF 3" BELOW GRADE.
4. PROTECT COPPER FROM CONCRETE WITH PLUMBERS TAPE (10 MIL. MIN.) OR PLASTIC SLEEVING

G IRRIGATION TRENCHING N.T.S.

APPROVAL

CITY APPROVED BY:
DIRECTOR OF PUBLIC WORKS DATE
CITY REVIEWED BY:
SENIOR ENGINEER DATE
SUBMITTED BY:
DATE

CLIENT
LANCASTER
Creating a better tomorrow. Together.
CITY OF LANCASTER
44933 FERN AVENUE
LANCASTER, CA 93534

PROJECT NAME
SAMARITAN'S PURSE PARK FORMERLY KNOWN AS EL DORADO PARK RENOVATION
PWCP NO. 24-008
44501 5th STREET EAST
LANCASTER, CA 93535

ENGINEER/ARCHITECT
IDS
IDS GROUP
1 PETERS CANYON ROAD, SUITE 130
IRVINE, CA. 92606
TEL: 949-387-8500, FAX: 949-387-0800

STAMP
LICENSED LANDSCAPE ARCHITECT LYNDES L. JOPKITS 02-05-2024 STATE OF CALIFORNIA

ISSUE

REV.	DESCRIPTION	DATE
	30% CD SET	12/15/23
	60% CD SET	01/19/24
	90% CD SET	02/26/24
1	CLIENT REVISION	04/26/24
2	BID SET	09/10/24

PROJECT IDENTIFICATION
THIS DRAWING WAS CREATED IN AUTODESK AUTOCAD V. 2021 UNLESS OTHERWISE NOTED.
THE ORIGINAL SIZE OF THIS SHEET IS 30" X 42"
THESE DRAWINGS AND SPECIFICATIONS ARE THE PROPERTY AND COPYRIGHT OF IDS GROUP AND SHALL NOT BE USED ON ANY OTHER PROJECT OR LOCATIONS EXCEPT AS DESCRIBED ON THE DRAWINGS, WITHOUT THE WRITTEN AGREEMENT WITH IDS GROUP.

IDS PROJECT NO.	22X099.01
IDS DRAWN BY	KG
IDS CHECKED BY	JL
IDS APPROVED BY	JL

SHEET TITLE
IRRIGATION DETAILS

SHEET NUMBER
LI-503
SHEET NO. 16 OF 23
CUMULATIVE SHEET NO. OF

PROGRESS SET - NOT FOR CONSTRUCTION

IDS GROUP - FILE LOCATION: \\IDS-FS1\SHARED\PROJECTS\2022\SHARED\22X099.01 LANC - EL DORADO PARK\05 CAD\11 LANDSCAPE\COURTYARD DESIGN\LI-503 IRRIGATION DETAILS PLOT DATE: 9/12/2024 10:36:21 AM USER: CISY.CAO

NOTE:
INSTALL PER MANUFACTURER'S DETAILS AND SPECIFICATIONS.

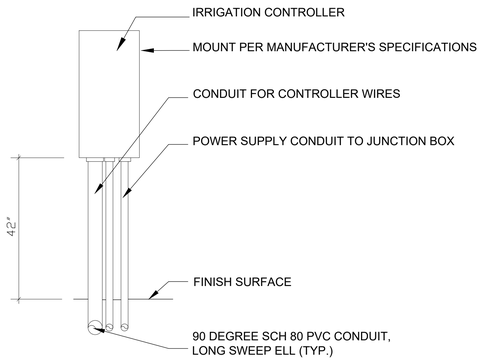

A CONTROLLER ASSEMBLY
WALL MOUNT — N.T.S. — SECTION

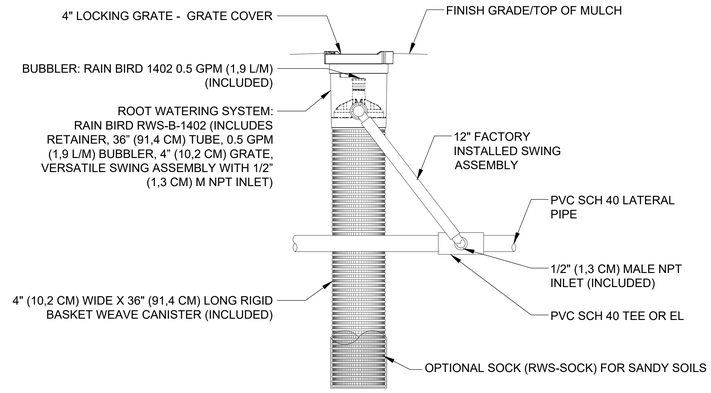

NOTES:
1. 4" (10,2 CM) GRATE
2. INSTALL PRODUCT SO THAT THE GRATE IS EVEN WITH FINISH GRADE OR TOP OF MULCH.
3. OPTIONAL SAND SOCK (RWS-SOCK) IS 34" (86,4 CM) IN LENGTH TO COVER MESH BASKET AREA.
4. WHEN INSTALLING IN EXTREMELY HARD OR CLAY SOILS, ADD 3/4" (1,9 CM) GRAVEL UNDER AND AROUND THE UNIT TO ALLOW FASTER WATER INFILTRATION AND ROOT PENETRATION.
5. ONCE RWS HAS BEEN INSTALLED FILL THE BASKET WITH PEA GRAVEL BEFORE LOCKING LID.

B ROOT WATERING SYSTEM (B-1402)
WITH GRATE COVER — N.T.S. — SECTION

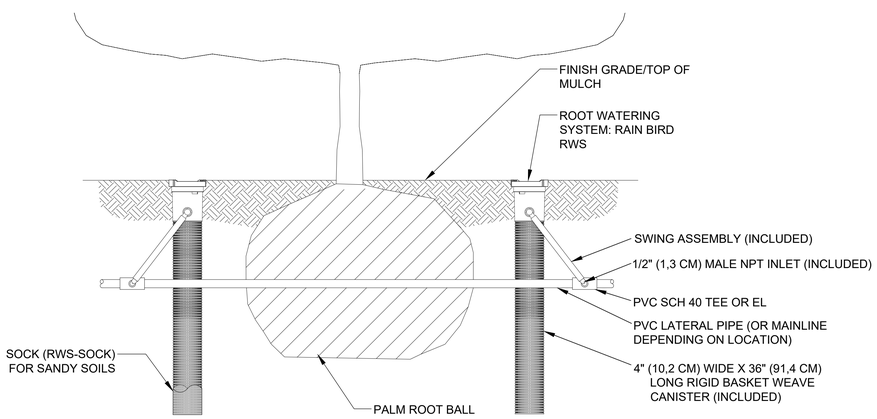

NOTES:
1. POSITION 3 UNITS EVENLY SPACED AROUND PLANT. FOR NEW TREES PLACE NEAR ROOT BALL. FOR EXISTING TREES PLACE HALF THE DISTANCE BETWEEN CANOPY EDGE AND TREE TRUNK.
2. INSTALL PRODUCT WITH TOP EVEN WITH GROUND SURFACE.
3. IF INSTALLATION LOCATION REQUIRES CONNECTION TO MAINLINE A NEW VALVE AND HOOK UP WILL BE INCLUDED AND CONSIDERED INCIDENTAL TO THE RWS INSTALLATION.
4. WHEN INSTALLING IN EXTREMELY HARD OR CLAY SOILS, ADD 3/4" (1,9 CM) GRAVEL UNDER AND AROUND THE UNIT TO ALLOW FASTER WATER INFILTRATION AND ROOT PENETRATION.
5. ONCE RWS HAS BEEN INSTALLED FILL THE BASKET WITH PEA GRAVEL BEFORE LOCKING LID.
6. OPTIONAL RWS-SOCK FOR USE IN SANDY SOILS.

C ROOT WATERING SYSTEM (B-1402)
N.T.S. — SECTION

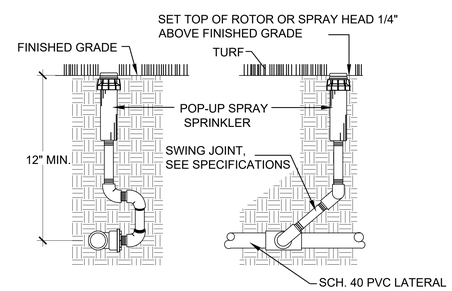

NOTE:
1. SET SPRINKLER HEAD A MINIMUM OF 6" FROM ANY ADJACENT PAVING OR EDGER.
2. SWING JOINT: PIPE SIZE EQUAL TO SPRINKLER INLET SIZE.

D POP-UP ROTOR; SPRAY HEADS
RAINBIRD 6504 ROTOR ADJUSTABLE OR EQUAL — N.T.S. — SECTION

APPROVAL

CITY APPROVED BY:
DIRECTOR OF PUBLIC WORKS — DATE
CITY REVIEWED BY:
SENIOR ENGINEER — DATE
SUBMITTED BY:
DATE

CLIENT
LANCASTER
Creating a better tomorrow. Together.
CITY OF LANCASTER
44933 FERN AVENUE
LANCASTER, CA 93534

PROJECT NAME
SAMARITAN'S PURSE PARK FORMERLY KNOWN AS EL DORADO PARK RENOVATION
PWCP NO. 24-008
44501 5th STREET EAST
LANCASTER, CA 93535

ENGINEER/ARCHITECT
IDS
IDS GROUP
1 PETERS CANYON ROAD, SUITE 130
IRVINE, CA. 92606
TEL: 949-387-8500, FAX: 949-387-0800

STAMP
LICENSED LANDSCAPE ARCHITECT — JAMES LYNDES LIVINGSTON — 02-26-2024 — STATE OF CALIFORNIA

ISSUE

REV.	DESCRIPTION	DATE
	30% CD SET	12/15/23
	60% CD SET	01/19/24
	90% CD SET	02/26/24
1	CLIENT REVISION	04/26/24
2	BID SET	09/10/24

PROJECT IDENTIFICATION
THIS DRAWING WAS CREATED IN AUTODESK AUTOCAD V. 2021 UNLESS OTHERWISE NOTED.
THE ORIGINAL SIZE OF THIS SHEET IS 30" X 42"
THESE DRAWINGS AND SPECIFICATIONS ARE THE PROPERTY AND COPYRIGHT OF IDS GROUP AND SHALL NOT BE USED ON ANY OTHER PROJECT OR LOCATIONS EXCEPT AS DESCRIBED ON THE DRAWINGS, WITHOUT THE WRITTEN AGREEMENT WITH IDS GROUP.

IDS PROJECT NO.	22X099.01
IDS DRAWN BY	KG
IDS CHECKED BY	JL
IDS APPROVED BY	JL

SHEET TITLE
IRRIGATION DETAILS

SHEET NUMBER
LC-504
SHEET NO. 17 OF 23
CUMULATIVE SHEET NO. OF

PROGRESS SET - NOT FOR CONSTRUCTION

IDS GROUP - FILE LOCATION: \\IDS-FS1\SHARED\PROJECTS\2022\SHARED\22X099.01 LANC - EL DORADO PARK\05 CAD\11 LANDSCAPE\COURTYARD DESIGN\LI-504 IRRIGATION DETAILS PLOT DATE: 9/12/2024 10:31:44 AM USER: CISY.CAO

IRRIGATION SYMBOL LEGEND

SYMBOL	DESCRIPTION	DETAIL
W	3-INCH DOMESTIC WATER IRRIGATION SUB METER	N/A
NOT SHOWN	BOOSTER BUMP	N/A
RP	IRRIGATION REDUCED PRESSURE PRINCIPLE BACKFLOW PREVENTER ZURN MODE 1975 X L3, OR EQUAL	A/ LI-503
	RAINBIRD INLINE LRBY150D LARGE CAPACITY DISC FILTER	C/ LI-503
	PRESSURE REGULATING VALVE	A/ LI-503
F	FLOW SENSOR	D/ LI-503
MV	MASTER VALVE	
	PVC BALL VALVE	
	QUICK COUPLER VALVE	
	2" TREE BUBBLER RAINBIRD PRESSURE CONTROL VALVE ZONE KIT ASSEMBLY	
	2" ROTOR SPRAY CONTROL VALVE RAINBIRD PESB 6504 ZONE KIT ASSEMBLY	
	SHRUB BUBBLER CONTROL VALVE RAINBIRD PESB 6504	
2 B	CONTROLLER EXISTING WITH NEW FLOW SENSOR AND MASTER VALVE - SA01-WT3-24-AX GT HYDP WTPR03-24 ALL INCLUSIVE CWM SAT ASSY 1 6, 156.296 6, 156.30 - 3100200 SUPERIOR MASTER VALVE 3100 BRASS 2 IN. NORMALLY OPEN FIPT X FIPT 1 274.599 274.60 - QS200-20 GPI FLOMEC0S200 ULTRASONIC FLOW METER IN 2 IN. PVC TEE S XS 1 404.164 404.16	
A	IRRIGATION CONTROLLER WITH NEW FLOW SENSOR AND MASTER VALVE - SA1-WT3-24-AXGT HYDP WTPR03-24-AII INCLUSIVE 18$S SAT ASSY 1 8,707.776 8, 707.78 - 3100300 SUPERIOR MASTER VALVE 3100 BRASS 3 IN. NORMALLY OPEN FIPT X PIPT 1 1,267.564 1,267.56 - QS200-30 GPI FLOMECQS200 ULTRASONIC FLOW METER IN 3 IN. PVC TEE SX S 1 510.523 510.52	
R	RAIN SENSOR - PER SPECS	
NOT SHOWN	FLOW SENSOR WIRE - PER SPECS	
	WIRE PULL BOX	
	PRESSURE MAINLINE - EXISTING	
	SLEEVES - TWICE THE DIAMETER OF THE WORKING PIPE SCHEDULE 40 PVC, ALL PIPE AND FITTINGS COLORED WHITE	
NOT SHOWN	BACKFLOW ENCLOSURE - PER SPECS	

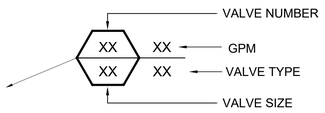

SPRAY HEADS

Q	H	F		
1	2	3	RAIN BIRD	FALCON 6504 POP-UP
4	5	6	RAIN BIRD	1800 SERIES PRESSURE REGULATING 15' RADIUS

TREE & SHRUB BUBBLERS - 1400 SERIES PRESSURE REGULATING

7	RAIN BIRD	SHRUBS 1401 .25 GPM
△	RAIN BIRD	TREES 1408 2 GPM (2 PER SYMBOL)

SPECIAL NOTES:

1. REFER TO CIVIL DRAWINGS FOR POTABLE WATER SYSTEM PLANS AND DETAILS.
2. REFER TO SDRSD I-33 FOR IRRIGATION MANIFOLD ASSEMBLY.
3. ALL PRESSURE MAINLINE FITTINGS SHALL BE SCHEDULE 80.
4. CONTROLLER, FLOW SENSOR, CABLES AND ACCESSORIES AVAILABLE THROUGH WEATHER TRAK.
5. CONTROLLERS SHALL BE MOUNTED IN A STAINLESS STEEL WALL MOUNTING.
6. LATERAL END RUNS FOR BUBBLERS SHALL BE 3/4" UNLESS NOTED OTHERWISE.
7. CONTROLLER COMMUNICATION ANTENNA LOCATED IN CONTROLLER ENCLOSURE. TEST COMMUNICATION RECEPTION WITH WEATHER TRAK. IF RECEPTION IS NOT PER SPECIFICATION, MOUNT ANTENNA RETEST FOR PROPER COMMUNICATION.
8. ALL VALVE AND EQUIPMENT BOXES SHALL INCLUDE A GOPHER BARRIER OF #4 MESH, GALV., WELDED, 23 GA. FABRIC . WRAP MIN. 3 INCHES UP VALVE BOX.
9. PROVIDE 120 VAC POWER FROM PARK ELECTRICAL PANEL FOR CONTROLLER COORDINATE WITH ELECTRICIAN.
10. MAINTENANCE PERIOD: MINIMUM 90 DAYS.
11. WARRANTY MATERIALS AND WORKMANSHIP FOR ONE YEAR AFTER FINAL ACCEPTANCE. INDIVIDUAL PRODUCT WARRANTIES MAY BE LONGER AND SHALL APPLY.
12. SHRUB BUBBLER LAYOUT IS SCHEMATIC ONLY (TYPICAL FOR ALL SHRUB AREAS) INSTALL ONE (1) 1402 BUBBLER PER PLANT. ANY VALVE WITH OVER 5 GPM SHALL BE PESB-PRS-D
13. EXISTING VALVES A, F, G, J, J, L, M, N, O, & P ARE TO BE PRESERVED IN PLACE AND MODIFIED TO CONNECT TO THE NEW SYSTEM. THE FULL NEW AND EXISTING SYSTEM IS TO OPERATE TOGETHER TO PROVIDE FULL COVERAGE WITHOUT OVERLAP ONTO HARDSCAPE ROADWAY OF OTHER RECREATIONAL COMPONENTS.

PIPE SIZING LEGEND - MAXIMUM ALLOWABLE FLOW*

PIPE SIZE (INCHES)	SCHEDULE 40 NON-PRESSURE LATERAL**	PRESSURE MAINLINE	
		SCH 40 (1" - 1-1/2")	SCH 40 (2" - 3")
1/2"	0 - 3	-	-
3/4"	4 - 7	-	-
1"	8 - 12	0 - 12	-
1 1/4"	13 - 22	13 - 22	-
1 1/2"	23 - 30	23 - 30	-
2"	31 - 50	31 - 50	-
2 1/2"	51 - 70	-	51 - 70
3"	-	-	71 - 100
4"	-	-	101 - 170

* MAXIMUM ALLOWABLE FLOW FOR VELOCITY BELOW 5 FEET PER SECOND DOES NOT IMPLY ASSOCIATED FRICTION / PRESSURE LOSSES ACCEPTABLE IN A GIVEN CONDITION.
** MINIMUM LATERAL SIZE 3/4" EXCEPT FOR I-25 ROTOR LINES WHICH SHALL BE MINIMUM 1" SIZE.

APPROVAL

CITY APPROVED BY:
DIRECTOR OF PUBLIC WORKS DATE
CITY REVIEWED BY:
SENIOR ENGINEER DATE
SUBMITTED BY:
DATE

CLIENT
LANCASTER
Creating a better tomorrow. Together.
CITY OF LANCASTER
44933 FERN AVENUE
LANCASTER, CA 93534

PROJECT NAME
SAMARITAN'S PURSE PARK FORMERLY KNOWN AS EL DORADO PARK RENOVATION
PWCP NO. 24-008
44501 5th STREET EAST
LANCASTER, CA 93535

ENGINEER/ARCHITECT
IDS
IDS GROUP
1 PETERS CANYON ROAD, SUITE 130
IRVINE, CA. 92606
TEL: 949-387-8500, FAX: 949-387-0800

STAMP
LICENSED LANDSCAPE ARCHITECT
JOSEPH LYNDES LICM 1576
LICENSED
02-26-2024
DATE
STATE OF CALIFORNIA

ISSUE

REV.	DESCRIPTION	DATE
	30% CD SET	12/15/23
	60% CD SET	01/19/24
	90% CD SET	02/26/24
1	CLIENT REVISION	04/26/24
2	BID SET	09/10/24

PROJECT IDENTIFICATION
THIS DRAWING WAS CREATED IN AUTODESK AUTOCAD V. 2021 UNLESS OTHERWISE NOTED.
THE ORIGINAL SIZE OF THIS SHEET IS 30" X 42"
THESE DRAWINGS AND SPECIFICATIONS ARE THE PROPERTY AND COPYRIGHT OF IDS GROUP AND SHALL NOT BE USED ON ANY OTHER PROJECT OR LOCATIONS EXCEPT AS DESCRIBED ON THE DRAWINGS, WITHOUT THE WRITTEN AGREEMENT WITH IDS GROUP.

IDS PROJECT NO.	22X099.01
IDS DRAWN BY	KG
IDS CHECKED BY	JL
IDS APPROVED BY	JL

SHEET TITLE
IRRIGATION SCHEDULE

SHEET NUMBER
LI-601
SHEET NO. 18 OF 23
CUMULATIVE SHEET NO. OF

PROGRESS SET - NOT FOR CONSTRUCTION

IDS GROUP - FILE LOCATION: \\IDS-FS1\SHARED\PROJECTS\2022\SHARED\22X099.01 LANC - EL DORADO PARK\05 CAD\11 LANDSCAPE\COURTYARD DESIGN\LI-601 IRRIGATION SCHEDULE AND WUCOLS CALCULATIONS PLOT DATE: 9/12/2024 10:46:10 AM USER: KRISTEN.GROS

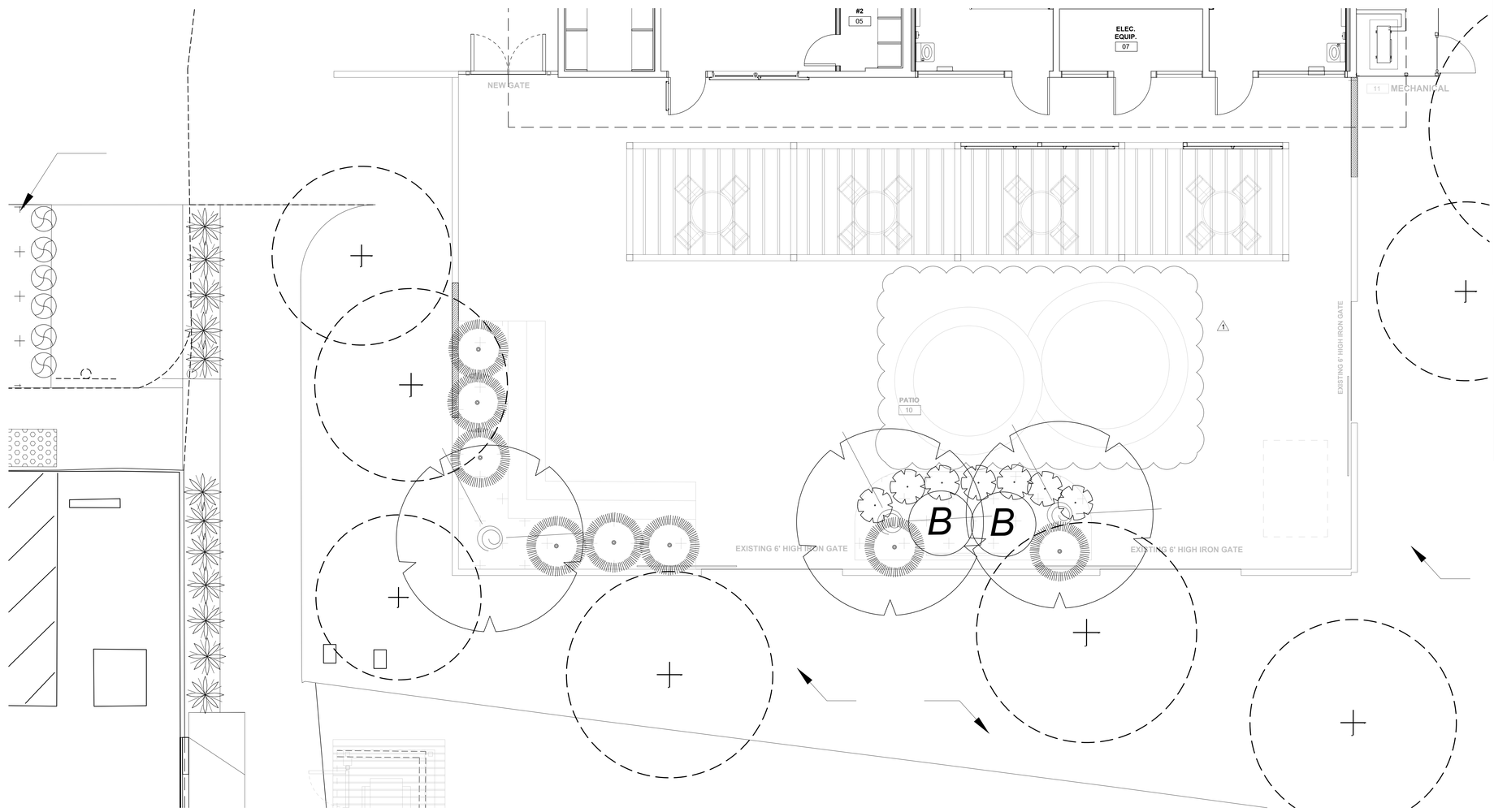

TREE PLANTING LEGEND

SYMBOL	BOTANICAL / COMMON NAME	(WUCOLS)	SIZE	QTY
	Cercis occidentalis WESTERN REDBUD	(M)	24" BOX STD.	3
	Lagerstroemia indica 'Muskogee' MUSKOGEE CRAPE MYRTLE	(M)	24" BOX STD.	8
	Morus alba WHITE FRUITLESS MULBERRY	(M)	24" BOX STD.	3
	Olea europaea 'Swan Hill' SWAN HILL FRUITLESS OLIVE	(M)	24" BOX STD.	8
	Parkinsonia 'Desert Museum' DESERT MUSEUM PALO VERDE	(L)	24" BOX MULTI	2
	Quercus tomentella ISLAND OAK	(L)	24" BOX STD.	3
	Ulmus parvifolia DRAKE ELM	(M)	24" BOX STD.	8
	Existing tree PRESERVE TREES IN PLACE			-

TRIM & SHAPE ALL EXISTING MATURE TREES

SHRUB PLANTING LEGEND

SYMBOL	BOTANICAL/COMMON NAME	SIZE	MINIMUM SPACING	QTY.	WUCOLS
	ACHILLEA TERRACOTTA TERRACOTTA YARROW	1 GAL.	2'-0" O.C.	56	(M)
B	BERBERIS T. ATROPURPUREA 'CRIMSON PIGMY' JAPANESE BARBERRY 'NANA'	5 GAL.	5'-0" O.C.	3	(M)
	CAESALPINIA GILLIESII YELLOW BIRD OF PARADISE	5 GAL.	2'-0" O.C.	8	(L)
	DIANELLA T. 'VARIEGATA' VARIEGATA FLAX LILY	5 GAL.	2'-0" O.C.	7	(M)
	HESPERALOE PARVIFLORA RED YUCCA	5 GAL.	3'-0" O.C.	52	(L)
	LOMANDRA LONGIFOLIA 'BREEZE' DWARF MAT RUSH	5 GAL.	4'-0" O.C.	38	(M)
	SOPHORA SECUNDIFLORA TEXAS MOUNTAIN LAUREL	15 GAL.	6'-0" O.C.	15	(L)
	SPHAERALCEA AMBIGUA DESERT GLOBEMALLOW	5 GAL.	3'-0" O.C.	95	(VL)
	VERBENA GOODDINGII SCENTED VERBENA	1 GAL.	2'-0" O.C.	268	(L)

BIOSWALE PLANTING LEGEND

SYMBOL	BOTANICAL/COMMON NAME				
	NASSELLA PULCHRA PURPLE NEEDLE GRASS	5 GAL.	3'-0" O.C.	10	(L)
	MUHLENBERGIA RIGENS DEER GRASS	5 GAL.	3'-0" O.C.	22	(VL)
	SALVIA APIANA WHITE SAGE	5 GAL.	5'-0" O.C.	20	(L)
	SALVIA CLEVELANDII CLEVELAND SAGE	5 GAL.	5'-0" O.C.	8	(M)

GROUNDCOVER PLANTING LEGEND

SYMBOL	BOTANICAL/COMMON NAME
	DECOMPOSED GRANITE (DG)
	EXISTING TURF & PLANTING TO BE PRESERVED
	TIFWAY HYBRID BERMUDA OVERSEEDED WITH WINTER RYE (SOD & SEED) EXISTING TURF TO BE PRESERVED IN PLACE OUTSIDE OF GRADING LIMITS

KEYPLAN

APPROVAL

CITY APPROVED BY:

DIRECTOR OF PUBLIC WORKS DATE

CITY REVIEWED BY:

SENIOR ENGINEER DATE

SUBMITTED BY:

DATE

CLIENT

LANCASTER

Creating a better tomorrow. Together.

CITY OF LANCASTER

44933 FERN AVENUE
LANCASTER, CA 93534

PROJECT NAME

SAMARITAN'S PURSE PARK FORMERLY KNOWN AS EL DORADO PARK RENOVATION

PWCP NO. 24-008

44501 5th STREET EAST
LANCASTER, CA 93535

ENGINEER/ARCHITECT

IDS

IDS GROUP

1 PETERS CANYON ROAD, SUITE 130
IRVINE, CA. 92606
TEL: 949-387-8500, FAX: 949-387-0800

STAMP

REGISTERED LANDSCAPE ARCHITECT
JOSEPH C. LYNDES I, LICENSE NO. 5145
02-26-2024
STATE OF CALIFORNIA

ISSUE

REV.	DESCRIPTION	DATE
	30% CD SET	12/15/23
	60% CD SET	01/19/24
	90% CD SET	02/26/24
1	CLIENT REVISION	04/26/24
2	BID SET	09/10/24

PROJECT IDENTIFICATION

THIS DRAWING WAS CREATED IN AUTODESK AUTOCAD V. 2021 UNLESS OTHERWISE NOTED.

THE ORIGINAL SIZE OF THIS SHEET IS 30" X 42"

THESE DRAWINGS AND SPECIFICATIONS ARE THE PROPERTY AND COPYRIGHT OF IDS GROUP AND SHALL NOT BE USED ON ANY OTHER PROJECT OR LOCATIONS EXCEPT AS DESCRIBED ON THE DRAWINGS, WITHOUT THE WRITTEN AGREEMENT WITH IDS GROUP.

IDS PROJECT NO.	22X099.01
IDS DRAWN BY	KG
IDS CHECKED BY	JL
IDS APPROVED BY	JL

SHEET TITLE

PLANTING PLAN PART 1

SHEET NUMBER

LP-101

SHEET NO. 19 OF 23

CUMULATIVE SHEET NO. OF

PROGRESS SET - NOT FOR CONSTRUCTION

IDS GROUP - FILE LOCATION: \\IDS-FS1\SHARED\PROJECTS\2022\SHARED\22X099.01 LANC - EL DORADO PARK\05 CAD\11 LANDSCAPE\COURTYARD DESIGN\LP-101 PLANTING PLAN PART 1 PLOT DATE: 9/12/2024 10:44:48 AM USER: CISY.CAO

FOR CONTINUATION SEE LP-103

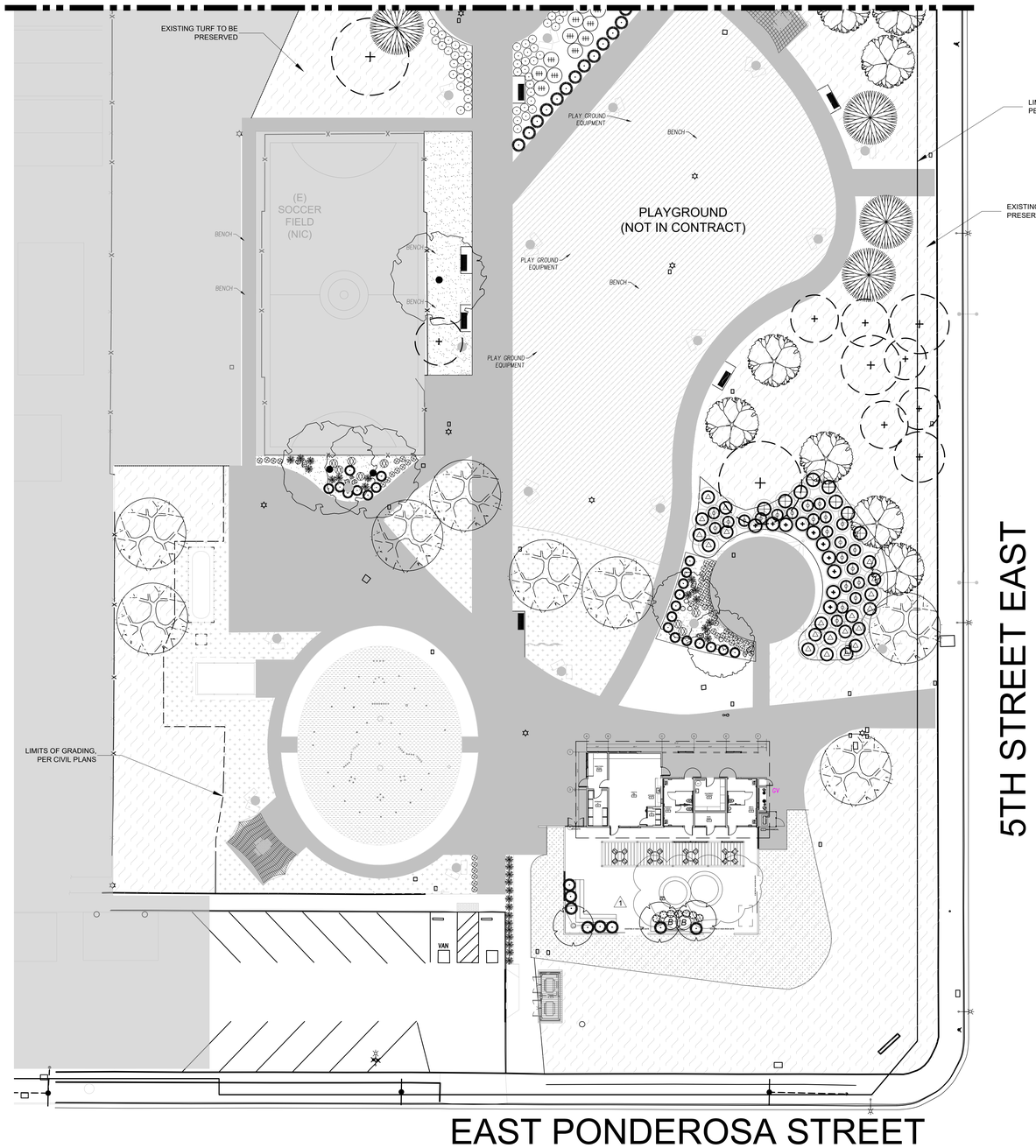

SCALE : 1" = 20' - 0"

TREE PLANTING LEGEND

SYMBOL	BOTANICAL / COMMON NAME	(WUCOLS)	SIZE	QTY
	Cercis occidentalis WESTERN REDBUD	(M)	24" BOX STD.	3
	Lagerstroemia indica 'Muskogee' MUSKOGEE CRAPE MYRTLE	(M)	24" BOX STD.	8
	Morus alba WHITE FRUITLESS MULBERRY	(M)	24" BOX STD.	3
	Olea europaea 'Swan Hill' SWAN HILL FRUITLESS OLIVE	(M)	24" BOX STD.	8
	Parkinsonia 'Desert Museum' DESERT MUSEUM PALO VERDE	(L)	24" BOX MULTI	2
	Quercus tomentella ISLAND OAK	(L)	24" BOX STD.	3
	Ulmus parvifolia DRAKE ELM	(M)	24" BOX STD.	8
	Existing tree PRESERVE TREES IN PLACE			-
	TRIM & SHAPE ALL EXISTING MATURE TREES			

SHRUB PLANTING LEGEND

SYMBOL	BOTANICAL/COMMON NAME	SIZE	MINIMUM SPACING	QTY.	WUCOLS
	ACHILLEA TERRACOTTA TERRACOTTA YARROW	1 GAL.	2'-0" O.C.	56	(M)
B	BERBERIS T. ATROPURPUREA 'CRIMSON PIGMY' JAPANESE BARBERRY 'NANA'	5 GAL.	5'-0" O.C.	3	(M)
	CAESALPINIA GILLIESII YELLOW BIRD OF PARADISE	5 GAL.	2'-0" O.C.	8	(L)
	DIANELLA T. 'VARIEGATA' VARIEGATA FLAX LILY	5 GAL.	2'-0" O.C.	7	(M)
	HESPERALOE PARVIFLORA RED YUCCA	5 GAL.	3'-0" O.C.	52	(L)
	LOMANDRA LONGIFOLIA 'BREEZE' DWARF MAT RUSH	5 GAL.	4'-0" O.C.	38	(M)
	SOPHORA SECUNDIFLORA TEXAS MOUNTAIN LAUREL	15 GAL.	6'-0" O.C.	15	(L)
	SPHAERALCEA AMBIGUA DESERT GLOBEMALLOW	5 GAL.	3'-0" O.C.	95	(VL)
	VERBENA GOODDINGII SCENTED VERBENA	1 GAL.	2'-0" O.C.	268	(L)

BIOSWALE PLANTING LEGEND

SYMBOL	BOTANICAL/COMMON NAME				
	NASSELLA PULCHRA PURPLE NEEDLE GRASS	5 GAL.	3'-0" O.C.	10	(L)
	MUHLENBERGIA RIGENS DEER GRASS	5 GAL.	3'-0" O.C.	22	(VL)
	SALVIA APIANA WHITE SAGE	5 GAL.	5'-0" O.C.	20	(L)
	SALVIA CLEVELANDII CLEVELAND SAGE	5 GAL.	5'-0" O.C.	8	(M)

GROUNDCOVER PLANTING LEGEND

SYMBOL	BOTANICAL/COMMON NAME
	DECOMPOSED GRANITE (DG)
	EXISTING TURF & PLANTING TO BE PRESERVED
	TIFWAY HYBRID BERMUDA OVERSEEDED WITH WINTER RYE (SOD & SEED) EXISTING TURF TO BE PRESERVED IN PLACE OUTSIDE OF GRADING LIMITS

KEYPLAN

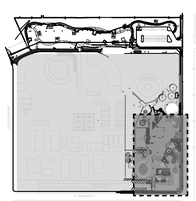

APPROVAL

CITY APPROVED BY:

DIRECTOR OF PUBLIC WORKS — DATE

CITY REVIEWED BY:

SENIOR ENGINEER — DATE

SUBMITTED BY:

DATE

CLIENT

LANCASTER
Creating a better tomorrow. Together.

CITY OF LANCASTER

44933 FERN AVENUE
LANCASTER, CA 93534

PROJECT NAME

SAMARITAN'S PURSE PARK FORMERLY KNOWN AS EL DORADO PARK RENOVATION

PWCP NO. 24-008

44501 5th STREET EAST
LANCASTER, CA 93535

ENGINEER/ARCHITECT

IDS

IDS GROUP

1 PETERS CANYON ROAD, SUITE 130
IRVINE, CA. 92606
TEL: 949-387-8500, FAX: 949-387-0800

STAMP

CHRISTOPHER LYNDES LANDSCAPE ARCHITECT
10-31-2025
02-26-2024
STATE OF CALIFORNIA

ISSUE

REV.	DESCRIPTION	DATE
	30% CD SET	12/15/23
	60% CD SET	01/19/24
	90% CD SET	02/26/24
1	CLIENT REVISION	04/26/24
2	BID SET	09/10/24

PROJECT IDENTIFICATION

THIS DRAWING WAS CREATED IN AUTODESK AUTOCAD V. 2021 UNLESS OTHERWISE NOTED.

THE ORIGINAL SIZE OF THIS SHEET IS 30" X 42"

THESE DRAWINGS AND SPECIFICATIONS ARE THE PROPERTY AND COPYRIGHT OF IDS GROUP AND SHALL NOT BE USED ON ANY OTHER PROJECT OR LOCATIONS EXCEPT AS DESCRIBED ON THE DRAWINGS, WITHOUT THE WRITTEN AGREEMENT WITH IDS GROUP.

IDS PROJECT NO.	22X099.01
IDS DRAWN BY	KG
IDS CHECKED BY	JL
IDS APPROVED BY	JL

SHEET TITLE

PLANTING PLAN PART 2

SHEET NUMBER

LP-102

SHEET NO. 20 OF 23

CUMULATIVE SHEET NO. OF

PROGRESS SET - NOT FOR CONSTRUCTION

IDS GROUP - FILE LOCATION: \\IDS-FS1\SHARED\PROJECTS\2022\SHARED\22X099.01 LANC - EL DORADO PARK\05 CAD\11 LANDSCAPE\COURTYARD DESIGN\LP-102 PLANTING PLAN PART 2 PLOT DATE: 9/12/2024 10:33:21 AM USER: CISY.CAO

IDS GROUP - FILE LOCATION: \\IDS-FS1\SHARED\PROJECTS\2022\SHARED\22X099.01 LANC - EL DORADO PARK\05 CAD\11 LANDSCAPE\COURTYARD DESIGN\LP-103 PLANTING PLAN PART 3 PLOT DATE: 9/12/2024 10:46:58 AM USER: CISY.CAO

FOR CONTINUATION SEE LP-104

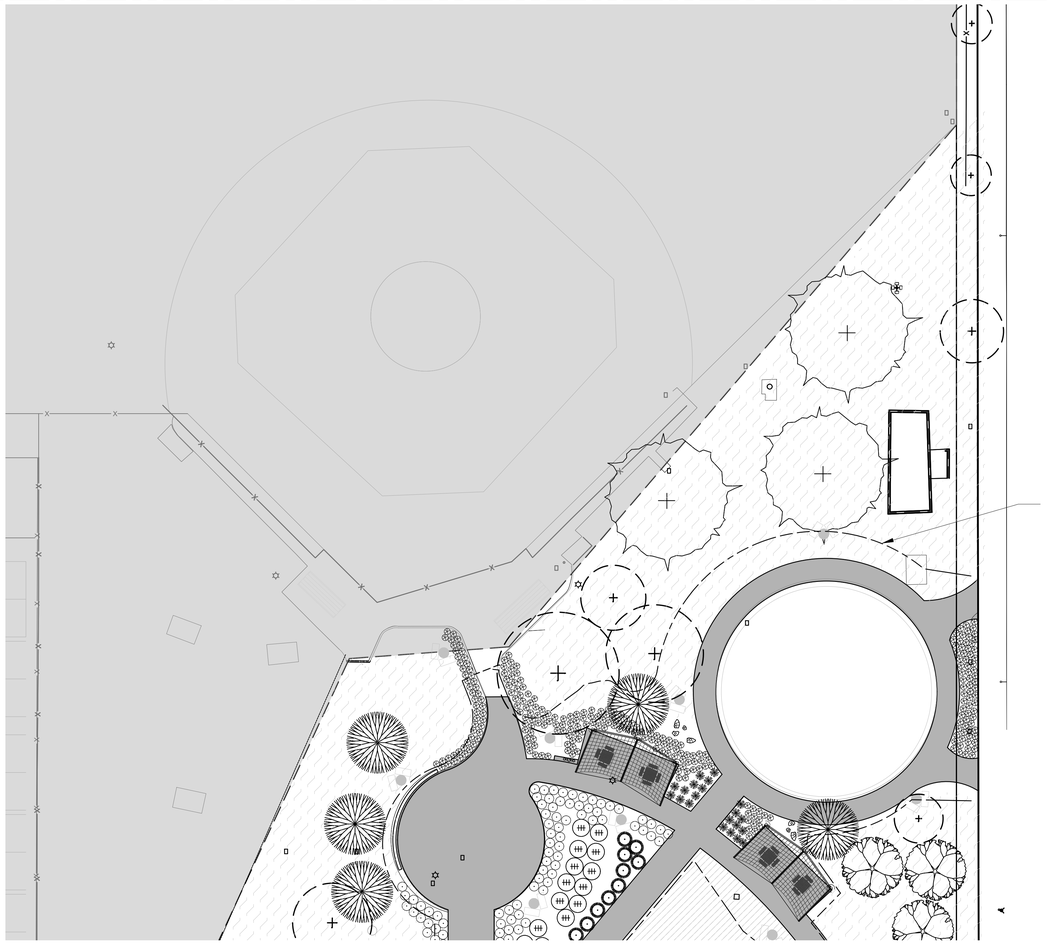

FOR CONTINUATION SEE LP-102

N

TREE PLANTING LEGEND

SYMBOL	BOTANICAL / COMMON NAME	(WUCOLS)	SIZE	QTY
	Cercis occidentalis WESTERN REDBUD	(M)	24" BOX STD.	3
	Lagerstroemia indica 'Muskogee' MUSKOGEE CRAPE MYRTLE	(M)	24" BOX STD.	8
	Morus alba WHITE FRUITLESS MULBERRY	(M)	24" BOX STD.	3
	Olea europaea 'Swan Hill' SWAN HILL FRUITLESS OLIVE	(M)	24" BOX STD.	8
	Parkinsonia 'Desert Museum' DESERT MUSEUM PALO VERDE	(L)	24" BOX MULTI	2
	Quercus tomentella ISLAND OAK	(L)	24" BOX STD.	3
	Ulmus parvifolia DRAKE ELM	(M)	24" BOX STD.	8
	Existing tree PRESERVE TREES IN PLACE			-

TRIM & SHAPE ALL EXISTING MATURE TREES

SHRUB PLANTING LEGEND

SYMBOL	BOTANICAL/COMMON NAME	SIZE	MINIMUM SPACING	QTY.	WUCOLS
	ACHILLEA TERRACOTTA TERRACOTTA YARROW	1 GAL.	2'-0" O.C.	56	(M)
B	BERBERIS T. ATROPURPUREA 'CRIMSON PIGMY' JAPANESE BARBERRY 'NANA'	5 GAL.	5'-0" O.C.	3	(M)
	CAESALPINIA GILLIESII YELLOW BIRD OF PARADISE	5 GAL.	2'-0" O.C.	8	(L)
	DIANELLA T. 'VARIEGATA' VARIEGATA FLAX LILY	5 GAL.	2'-0" O.C.	7	(M)
	HESPERALOE PARVIFLORA RED YUCCA	5 GAL.	3'-0" O.C.	52	(L)
	LOMANDRA LONGIFOLIA 'BREEZE' DWARF MAT RUSH	5 GAL.	4'-0" O.C.	38	(M)
	SOPHORA SECUNDIFLORA TEXAS MOUNTAIN LAUREL	15 GAL.	6'-0" O.C.	15	(L)
	SPHAERALCEA AMBIGUA DESERT GLOBEMALLOW	5 GAL.	3'-0" O.C.	95	(VL)
	VERBENA GOODDINGII SCENTED VERBENA	1 GAL.	2'-0" O.C.	268	(L)

BIOSWALE PLANTING LEGEND

SYMBOL	BOTANICAL/COMMON NAME				
	NASSELLA PULCHRA PURPLE NEEDLE GRASS	5 GAL.	3'-0" O.C.	10	(L)
	MUHLENBERGIA RIGENS DEER GRASS	5 GAL.	3'-0" O.C.	22	(VL)
	SALVIA APIANA WHITE SAGE	5 GAL.	5'-0" O.C.	20	(L)
	SALVIA CLEVELANDII CLEVELAND SAGE	5 GAL.	5'-0" O.C.	8	(M)

GROUNDCOVER PLANTING LEGEND

SYMBOL	BOTANICAL/COMMON NAME
	DECOMPOSED GRANITE (DG)
	EXISTING TURF & PLANTING TO BE PRESERVED
	TIFWAY HYBRID BERMUDA OVERSEEDED WITH WINTER RYE (SOD & SEED) EXISTING TURF TO BE PRESERVED IN PLACE OUTSIDE OF GRADING LIMITS

KEYNOTES

EXISTING TURF IS TO BE PRESERVED IN PLACE.

This data was produced from the i-Tree Planting Calculator version 2.6.0 for Lancaster, CA
Location: Lancaster, CA 93536
Electricity Emissions Factor: 285
Fuel Emissions Factor: 53.1
Lifetime: 50
Project Lifetime Tree Mortality: 0
Run Date: 2-26-2024

Group Identifier	Tree Group Characteristics	Species	DBH (inches)	Distance to Building (feet)	Direction	Building Vintage	Tree Condition	Crown Light Exposure	CO2 Avoided (pounds)	CO2 Avoided ($)	CO2 Sequestered (pounds)	CO2 Sequestered ($)	Electricity Saved (kWh)	Electricity Saved ($)	Fuel Saved (MMBtu)	Fuel Saved ($)	Tree Biomass (short ton)	Rainfall Interception (gallons)	Avoided Runoff (gallons)	Avoided Runoff ($)	O3 Removed (pounds)	NO2 Avoided (pounds)	NO2 Removed (pounds)	SO2 Avoided (pounds)	SO2 Removed (pounds)	VOC Avoided (pounds)	PM2.5 Avoided (pounds)	PM2.5 Removed (pounds)	Avoided Value ($)	Removal Value ($)
1	(8.0) Lagerstroemia spp(Lagerstroemia) at 2.5 inches DBH	Lagerstroemia spp(Lagerstroemia)	2.5	>60	north (0â°)	post-1980	excellent	full sun	0	$0.00	38,152.90	$887.32	0	$0.00	0	$0.00	10.4	94,274.00	9,198.40	$82.20	90.9	0	18.63	0	0.54	0	0	0.67	$0.00	$3.83
10	(2.0) European Olive(Olea europaea ssp. europea) at 3.0 i	European Olive(Olea europaea ssp. europea)	3	>60	northwest	post-1980	excellent	full sun	0	$0.00	11,484.60	$267.10	0	$0.00	0	$0.00	3.2	36,505.20	3,561.80	$31.83	57.65	0	13.25	0	0.35	0	0	0.85	$0.00	$2.33
2	(3.0) Lagerstroemia spp(Lagerstroemia) at 2.5 inches DBH	Lagerstroemia spp(Lagerstroemia)	2.5	0-19	east (90â°)	post-1980	excellent	full sun	4,202.60	$97.74	14,307.30	$332.74	7,065.20	$1,446.25	-5.7	($73.91)	3.9	35,352.80	3,449.40	$30.82	34.09	0.26	6.99	0.93	0.2	3.51	2.28	0.25	$6.85	$1.44
3	(3.0) White mulberry(Morus alba) at 2.0 inches DBH.Plant	White mulberry(Morus alba)	2	>60	north (0â°)	post-1980	excellent	full sun	0	$0.00	36,124.70	$840.15	0	$0.00	0	$0.00	9.4	102,033.30	9,955.50	$88.96	114.37	0	23.69	0	0.67	0	0	0.95	$0.00	$4.60
4	(5.0) European Olive(Olea europaea ssp. europea) at 3.0 i	European Olive(Olea europaea ssp. europea)	3	0-19	northwest	post-1980	excellent	full sun	47,938.80	$1,114.91	28,711.50	$667.74	58,119.30	$11,897.03	67.2	$869.57	7.9	91,263.00	8,904.60	$79.57	144.12	3.11	33.13	10.93	0.89	29.47	18.89	2.12	$58.86	$5.82
5	(2.0) European Olive(Olea europaea ssp. europea) at 3.0 i	European Olive(Olea europaea ssp. europea)	3	0-19	northeast (	post-1980	excellent	full sun	18,137.20	$421.82	11,484.60	$267.10	20,195.70	$4,134.06	36	$465.65	3.2	36,505.20	3,561.80	$31.83	57.65	1.18	13.25	4.17	0.35	10.31	6.58	0.85	$20.73	$2.33
6	(5.0) European Olive(Olea europaea ssp. europea) at 3.0 i	European Olive(Olea europaea ssp. europea)	3	0-19	south (180	post-1980	excellent	full sun	10,648.90	$247.66	28,711.50	$667.74	42,975.90	$8,797.17	-162.1	($2,098.12)	7.9	91,263.00	8,904.60	$79.57	144.12	0.55	33.13	1.94	0.89	20.65	13.71	2.12	$38.91	$5.82
7	(2.0) Cercidium spp(Cercidium) at 3.0 inches DBH.Planted	Cercidium spp(Cercidium)	3	20-39	north (0â°)	post-1980	excellent	full sun	10,833.00	$251.94	33,022.90	$768.01	12,743.70	$2,608.64	17.5	$226.21	8.7	46,283.30	4,515.90	$40.35	58.42	0.7	12.2	2.48	0.34	6.48	4.15	0.53	$12.97	$2.28
8	(3.0) Oak spp(Quercus) at 3.5000000000000004 inches DBH	Oak spp(Quercus)	3.5	>60	northwest	post-1980	excellent	full sun	0	$0.00	32,020.60	$744.70	0	$0.00	0	$0.00	8.6	119,660.40	11,675.40	$104.33	162.2	0	34.03	0	0.93	0	0	1.56	$0.00	$6.25
9	(8.0) Elm spp(Ulmus) at 3.0 inches DBH.Planted >60 feet a	Elm spp(Ulmus)	3	>60	north (0â°)	post-1980	excellent	full sun	0	$0.00	76,241.70	$1,773.15	0	$0.00	0	$0.00	20	302,999.70	29,564.00	$264.18	352.34	0	73.15	0	2.04	0	0	3	$0.00	$14.01
Total									91,760.50	$2,134.07	310,262.50	$7,215.75	141,099.80	$28,883.14	-47.2	($610.60)	83.3	956,139.90	93,291.50	$833.65	1,215.84	5.81	261.43	20.45	7.19	70.42	45.61	12.9	$138.31	$48.72

KEYPLAN

APPROVAL

CITY APPROVED BY:

DIRECTOR OF PUBLIC WORKS DATE

CITY REVIEWED BY:

SENIOR ENGINEER DATE

SUBMITTED BY:

DATE

CLIENT

LANCASTER

Creating a better tomorrow. Together.

CITY OF LANCASTER

44933 FERN AVENUE
LANCASTER, CA 93534

PROJECT NAME

SAMARITAN'S PURSE PARK FORMERLY KNOWN AS EL DORADO PARK RENOVATION

PWCP NO. 24-008

44501 5th STREET EAST
LANCASTER, CA 93535

ENGINEER/ARCHITECT

IDS

IDS GROUP

1 PETERS CANYON ROAD, SUITE 130
IRVINE, CA. 92606
TEL: 949-387-8500, FAX: 949-387-0800

STAMP

LICENSED LANDSCAPE ARCHITECT
LYNDES L. GRAY
02-26-2024
STATE OF CALIFORNIA

ISSUE

REV.	DESCRIPTION	DATE
	30% CD SET	12/15/23
	60% CD SET	01/19/24
	90% CD SET	02/26/24
1	CLIENT REVISION	04/26/24
2	BID SET	09/10/24

PROJECT IDENTIFICATION

THIS DRAWING WAS CREATED IN AUTODESK AUTOCAD V. 2021 UNLESS OTHERWISE NOTED.

THE ORIGINAL SIZE OF THIS SHEET IS 30" X 42"

THESE DRAWINGS AND SPECIFICATIONS ARE THE PROPERTY AND COPYRIGHT OF IDS GROUP AND SHALL NOT BE USED ON ANY OTHER PROJECT OR LOCATIONS EXCEPT AS DESCRIBED ON THE DRAWINGS, WITHOUT THE WRITTEN AGREEMENT WITH IDS GROUP.

IDS PROJECT NO.	22X099.01
IDS DRAWN BY	KG
IDS CHECKED BY	JL
IDS APPROVED BY	JL

SHEET TITLE

PLANTING PLAN PART 3

SHEET NUMBER

LP-103

SHEET NO. 21 OF 23

CUMULATIVE SHEET NO. OF

PROGRESS SET - NOT FOR CONSTRUCTION

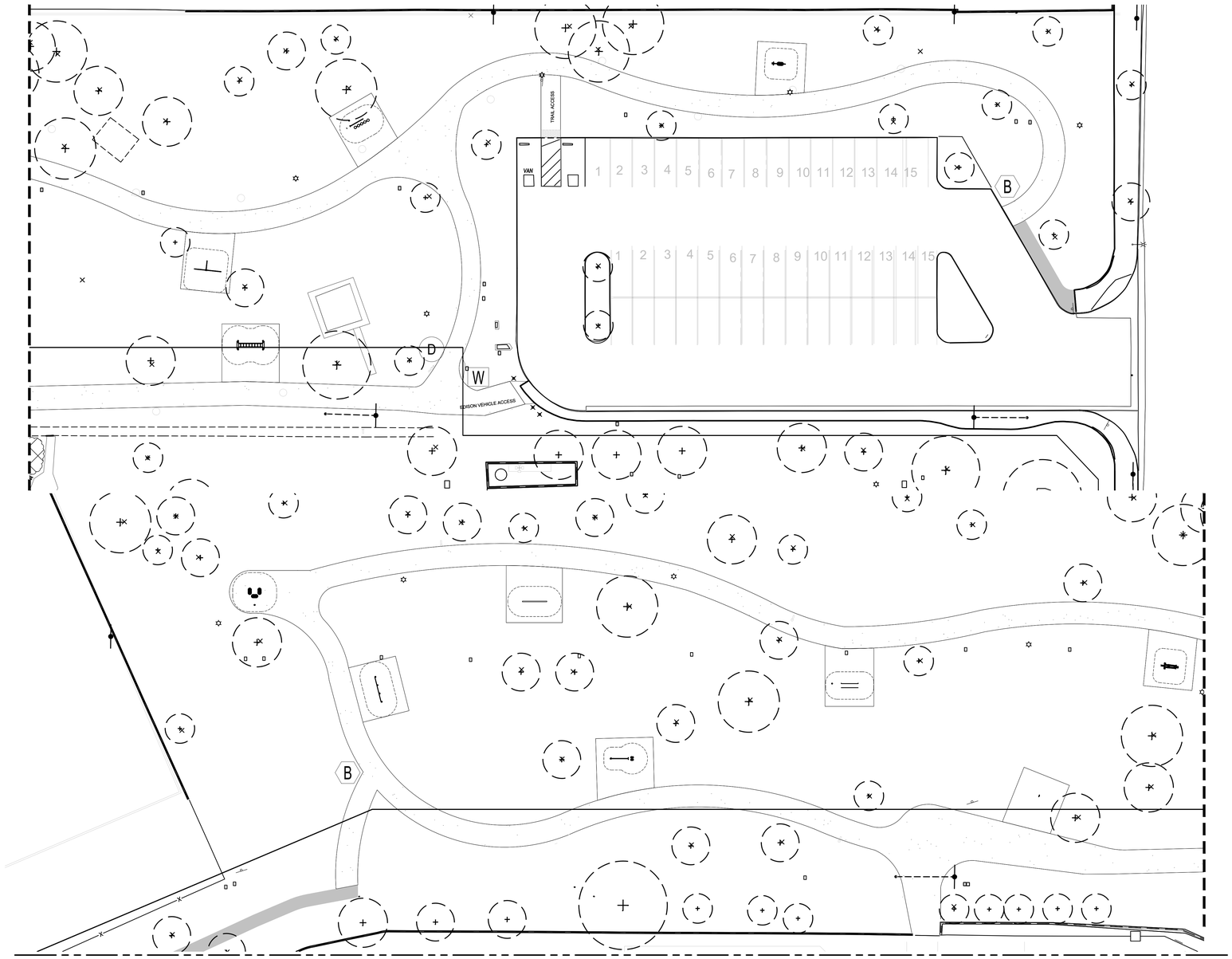

FOR CONTINUATION SEE LP-103

KEYNOTES

- AB CRUNCH / LEG LIFT AND CHEST / BACK PRESS
- BALANCE STEPS AND HAND CYCLER - ADA
- ASSISTED ROW WITH PUSHUP
- ELLIPTICAL
- HEALTHBEAT STYLE PARALLEL BARS
- SINGLE SLANTED RPL BOARD CLIMBER
- PLYOMETRICS DB
- STEEL POST W/2 AND 0 ATTACHMENTS DB
- STRETCH DB
- JUMP TOUCH DB ONLY
- 2" HORIZONTAL LADDER
- NO NEW PLANTS ARE PROPOSED

SYMBOL LEGEND

- DECOMPOSED GRANITE (DG)
- TIFWAY HYBRID BERMUDA (WHERE NECESSARY TO RESTORE TURF)
- B — BIKE RACK
- W — WASTE RECEPTICAL
- D — DRINKING FOUNTAIN

KEYPLAN

N

APPROVAL

CITY APPROVED BY:

DIRECTOR OF PUBLIC WORKS — DATE

CITY REVIEWED BY:

SENIOR ENGINEER — DATE

SUBMITTED BY:

DATE

CLIENT

LANCASTER

Creating a better tomorrow. Together.

CITY OF LANCASTER

44933 FERN AVENUE
LANCASTER, CA 93534

PROJECT NAME

SAMARITAN'S PURSE PARK FORMERLY KNOWN AS EL DORADO PARK RENOVATION

PWCP NO. 24-008

44501 5th STREET EAST
LANCASTER, CA 93535

ENGINEER/ARCHITECT

IDS

IDS GROUP

1 PETERS CANYON ROAD, SUITE 130
IRVINE, CA. 92606
TEL: 949-387-8500, FAX: 949-387-0800

STAMP

ISSUE

REV.	DESCRIPTION	DATE
	30% CD SET	12/15/23
	60% CD SET	01/19/24
	90% CD SET	02/26/24
1	CLIENT REVISION	04/26/24
2	BID SET	09/10/24

PROJECT IDENTIFICATION

THIS DRAWING WAS CREATED IN AUTODESK AUTOCAD V. 2021 UNLESS OTHERWISE NOTED.

THE ORIGINAL SIZE OF THIS SHEET IS 30" X 42"

THESE DRAWINGS AND SPECIFICATIONS ARE THE PROPERTY AND COPYRIGHT OF IDS GROUP AND SHALL NOT BE USED ON ANY OTHER PROJECT OR LOCATIONS EXCEPT AS DESCRIBED ON THE DRAWINGS, WITHOUT THE WRITTEN AGREEMENT WITH IDS GROUP.

IDS PROJECT NO.	22X099.01
IDS DRAWN BY	KG
IDS CHECKED BY	JL
IDS APPROVED BY	JL

SHEET TITLE

PLANTING PLAN PART 4

SHEET NUMBER

LP-104

SHEET NO. 22 OF 23

CUMULATIVE SHEET NO. OF

PROGRESS SET - NOT FOR CONSTRUCTION

IDS GROUP - FILE LOCATION: \\IDS-FS1\SHARED\PROJECTS\2022\SHARED\22X099.01 LANC - EL DORADO PARK\05 CAD\11 LANDSCAPE\COURTYARD DESIGN\LP-104 PLANTING PLAN PART 4 PLOT DATE: 9/12/2024 10:41:11 AM USER: CISY.CAO

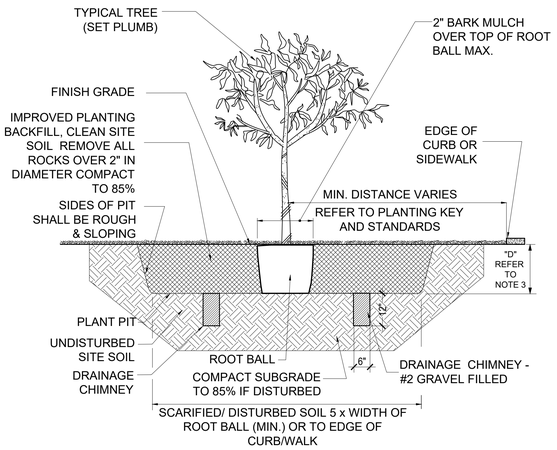

NOTES:
1. NO PLANTS SHALL BE PRUNED EXCEPT @ THE DIRECTION OF THE CITY REPRESENTATIVE
2. STAKE TREE, PER DIRECTION OF CITY REPRESENTATIVE (SEE TREE STAKING DETAIL).
3. DEPTH ("D") OF PLANT PIT TO BE EQUAL TO DEPTH OF ROOT BALL.
4. ROOT PRUNE PRIOR TO PLANTING.

A TREE PLANTING DETAIL

N.T.S.

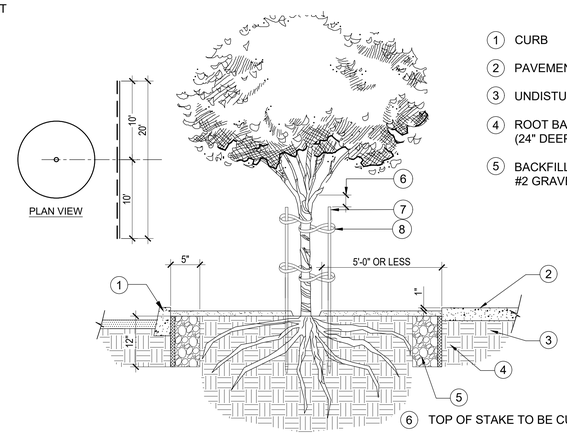

1. CURB
2. PAVEMENT
3. UNDISTURBED SOIL
4. ROOT BARRIER (24" DEEP, 20'-0" LONG)
5. BACKFILL AREA WITH #2 GRAVEL
6. TOP OF STAKE TO BE CUT 6" BELOW TREE
7. (2) 2" DIA. 10' LONG LODGE POLES TO BE PLACED OUTSIDE ROOTBALL
8. (4) BLACK CINCH-TIES WITH ONE TWIST NAILED

B TREE PLANTING STAKING & ROOT BARRIER

N.T.S.

USE WHEN TREE IS PLANTING WITHIN 5' OF CURB OR PAVEMENT

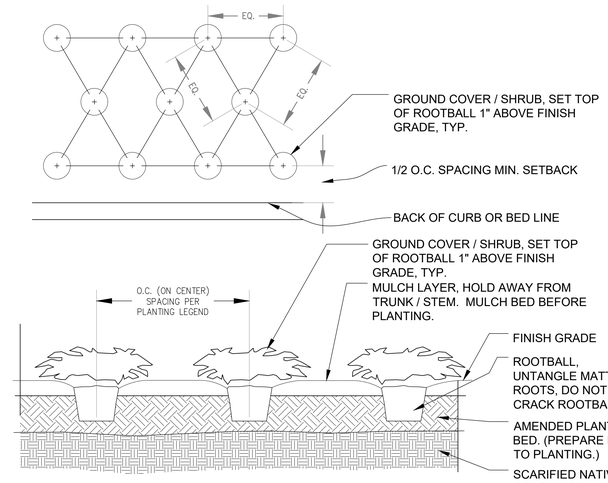

C GROUND COVER PLANTING

N.T.S.

SECTION

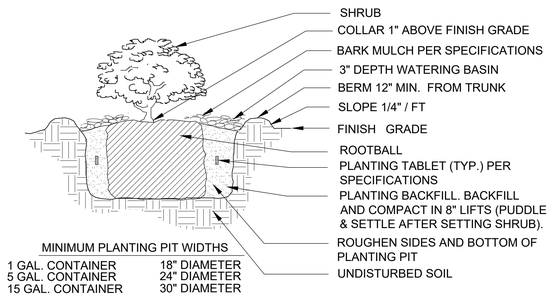

MINIMUM PLANTING PIT WIDTHS

1 GAL. CONTAINER	18" DIAMETER
5 GAL. CONTAINER	24" DIAMETER
15 GAL. CONTAINER	30" DIAMETER

D SHRUB PLANTING

N.T.S.

SECTION

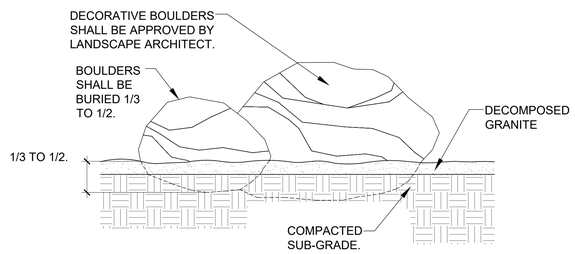

E DECORATIVE BOULDER PLACEMENT

N.T.S.

SECTION

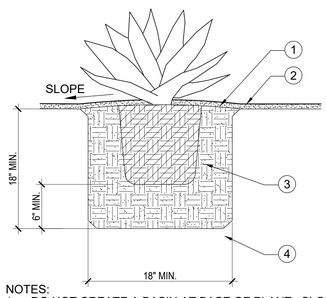

1. DECOMPOSED GRANITE SURFACING, WHERE APPLICABLE
2. FINISH GRADE
3. NATIVE SOIL OR CLEAN SAND BACKFILL, AS SPECIFIED. DO NOT INCLUDE MULCH. THOROUGHLY INCORPORATE 0.25 LBS. OF SOIL SULFUR INTO BACKFILL. WATER SETTLE AND TAMP SOIL BELOW ROOT BALL.
4. UNDISTURBED SUBGRADE.

NOTES:
1. DO NOT CREATE A BASIN AT BASE OF PLANT. SLOPE BACKFILL AWAY FROM STEM.
2. THIS DETAIL APPLIES TO NURSERY GROWN STOCK OF THE GENERA AGAVE, DASYLIRION, AND HESPERALOE.

F SUCCULENT PLANTING DETAIL

N.T.S.

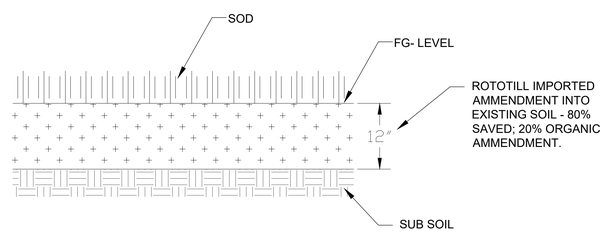

G NOT USED

N.T.S.

SECTION

H SOD DETAIL

N.T.S.

SECTION

APPROVAL

CITY APPROVED BY:

DIRECTOR OF PUBLIC WORKS — DATE

CITY REVIEWED BY:

SENIOR ENGINEER — DATE

SUBMITTED BY:

DATE

CLIENT

LANCASTER

Creating a better tomorrow. Together.

CITY OF LANCASTER

44933 FERN AVENUE
LANCASTER, CA 93534

PROJECT NAME

SAMARITAN'S PURSE PARK FORMERLY KNOWN AS EL DORADO PARK RENOVATION

PWCP NO. 24-008

44501 5th STREET EAST
LANCASTER, CA 93535

ENGINEER/ARCHITECT

IDS

IDS GROUP

1 PETERS CANYON ROAD, SUITE 130
IRVINE, CA. 92606
TEL: 949-387-8500, FAX: 949-387-0800

STAMP

REGISTERED LANDSCAPE ARCHITECT — LYNDES J. LOGAN — 02-26-2024 — STATE OF CALIFORNIA

ISSUE

REV.	DESCRIPTION	DATE
	30% CD SET	12/15/23
	60% CD SET	01/19/24
	90% CD SET	02/26/24
1	CLIENT REVISION	04/26/24
2	BID SET	09/10/24

PROJECT IDENTIFICATION

THIS DRAWING WAS CREATED IN AUTODESK AUTOCAD V. 2021 UNLESS OTHERWISE NOTED.

THE ORIGINAL SIZE OF THIS SHEET IS 30" X 42"

THESE DRAWINGS AND SPECIFICATIONS ARE THE PROPERTY AND COPYRIGHT OF IDS GROUP AND SHALL NOT BE USED ON ANY OTHER PROJECT OR LOCATIONS EXCEPT AS DESCRIBED ON THE DRAWINGS, WITHOUT THE WRITTEN AGREEMENT WITH IDS GROUP.

IDS PROJECT NO.	22X099.01
IDS DRAWN BY	KG
IDS CHECKED BY	JL
IDS APPROVED BY	JL

SHEET TITLE

PLANTING DETAILS

SHEET NUMBER

LP-501

SHEET NO. 23 OF 23

CUMULATIVE SHEET NO. OF

PROGRESS SET - NOT FOR CONSTRUCTION

IDS GROUP - FILE LOCATION: \\IDS-FS1\SHARED\PROJECTS\2022\SHARED\22X099.01 LANC - EL DORADO PARK\05 CAD\11 LANDSCAPE\COURTYARD DESIGN\LP-501 PLANTING DETAILS PLOT DATE: 9/12/2024 10:42:33 AM USER: KRISTEN.GROS

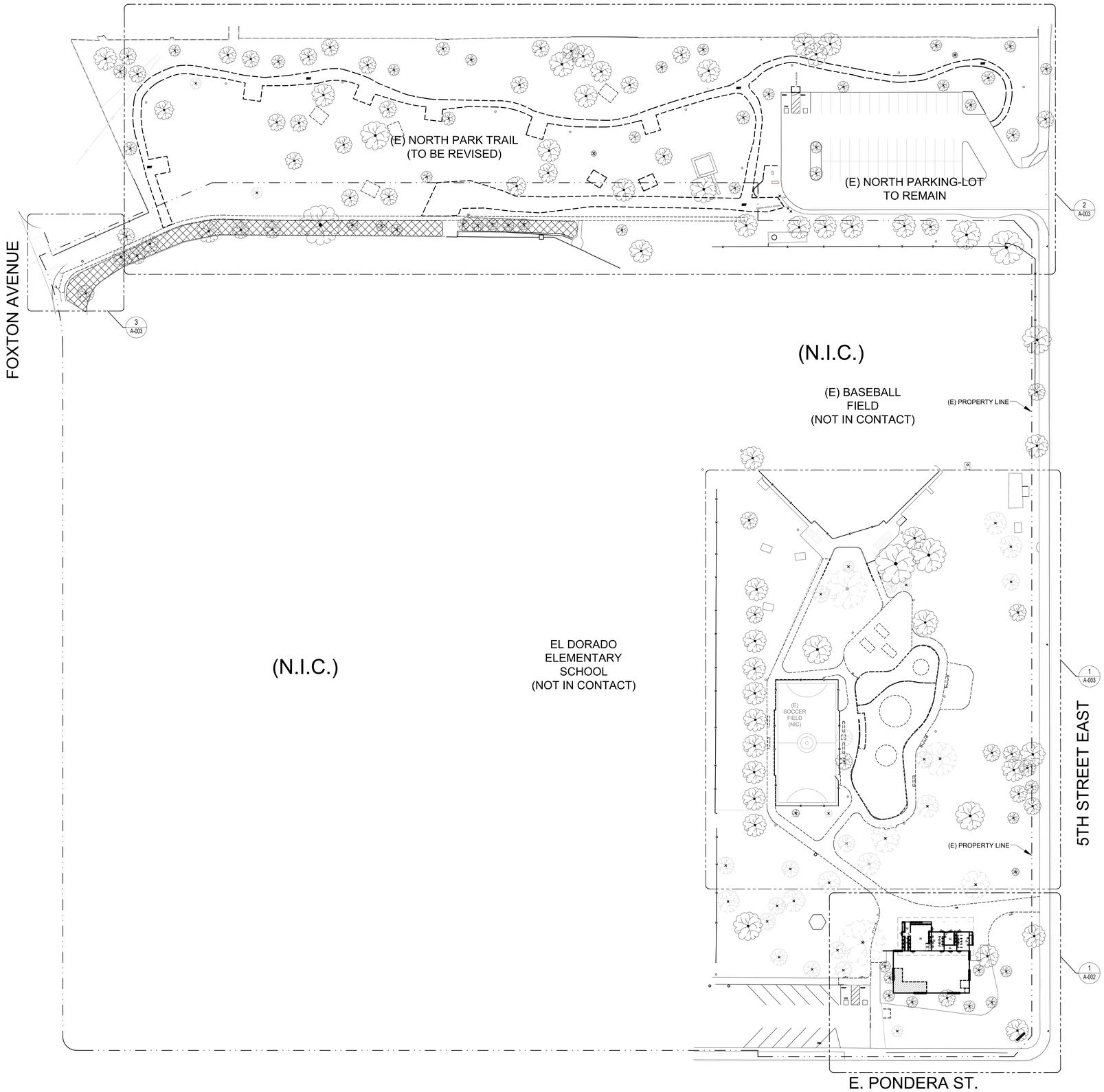

OVERALL SITE DEMOLITION PLAN | 1" = 40'-0" | 1

APPROVAL

CITY APPROVED BY:

DIRECTOR OF PUBLIC WORKS DATE

CITY REVIEWED BY:

SENIOR ENGINEER DATE

SUBMITTED BY:

DATE

CLIENT

LANCASTER

Creating a better tomorrow. Together.

CITY OF LANCASTER

44933 FERN AVENUE
LANCASTER, CA 93534

PROJECT NAME

SAMARITAN'S PURSE PARK FORMERLY KNOWN AS EL DORADO PARK RENOVATION

PWCP NO. 24-008

44501 5th STREET EAST
LANCASTER, CA 93535

ENGINEER/ARCHITECT

IDS

IDS GROUP

1 PETERS CANYON ROAD, SUITE 130
IRVINE, CA. 92606
TEL: 949-387-8500, FAX: 949-387-0800

STAMP

LICENSED ARCHITECT
JOSEPH SILBER
REN. 7-31-25
STATE OF CALIFORNIA

DATE SIGNED: 02/26/2024

ISSUE

REV.	DESCRIPTION	DATE
	30% CD SET	12/15/23
	60% CD SET	01/19/24
	90% CD SET	02/26/24
1	CLIENT REVISION	04/26/24
	COMPOSITE SET	9/24/25

PROJECT IDENTIFICATION

THIS DRAWING WAS CREATED IN AUTODESK AUTOCAD V. 2021 UNLESS OTHERWISE NOTED.

THE ORIGINAL SIZE OF THIS SHEET IS 30" X 42"

THESE DRAWINGS AND SPECIFICATIONS ARE THE PROPERTY AND COPYRIGHT OF IDS GROUP AND SHALL NOT BE USED ON ANY OTHER PROJECT OR LOCATIONS EXCEPT AS DESCRIBED ON THE DRAWINGS, WITHOUT THE WRITTEN AGREEMENT WITH IDS GROUP.

IDS PROJECT NO.	22X099.01
IDS DRAWN BY	MJ
IDS CHECKED BY	MM
IDS APPROVED BY	MM

SHEET TITLE

OVERALL SITE DEMOLTION PLAN

SHEET NUMBER

A-001

SHEET NO. XXX OF XXX

CUMULATIVE SHEET NO. XXX OF XXX

PROGRESS SET - NOT FOR CONSTRUCTION

IDS GROUP - FILE LOCATION: S:\PROJECTS\2022\SHARED\22X099.01 LANC - EL DORADO PARK\05 CAD\01 ARCH\01 ARCH FOR EXISTING BLDG\A-001_SITE-DEMOLITION-PLAN PLOT DATE: 4/25/2024 1:51:52 PM USER: MAHSA.JAVAHERIAN

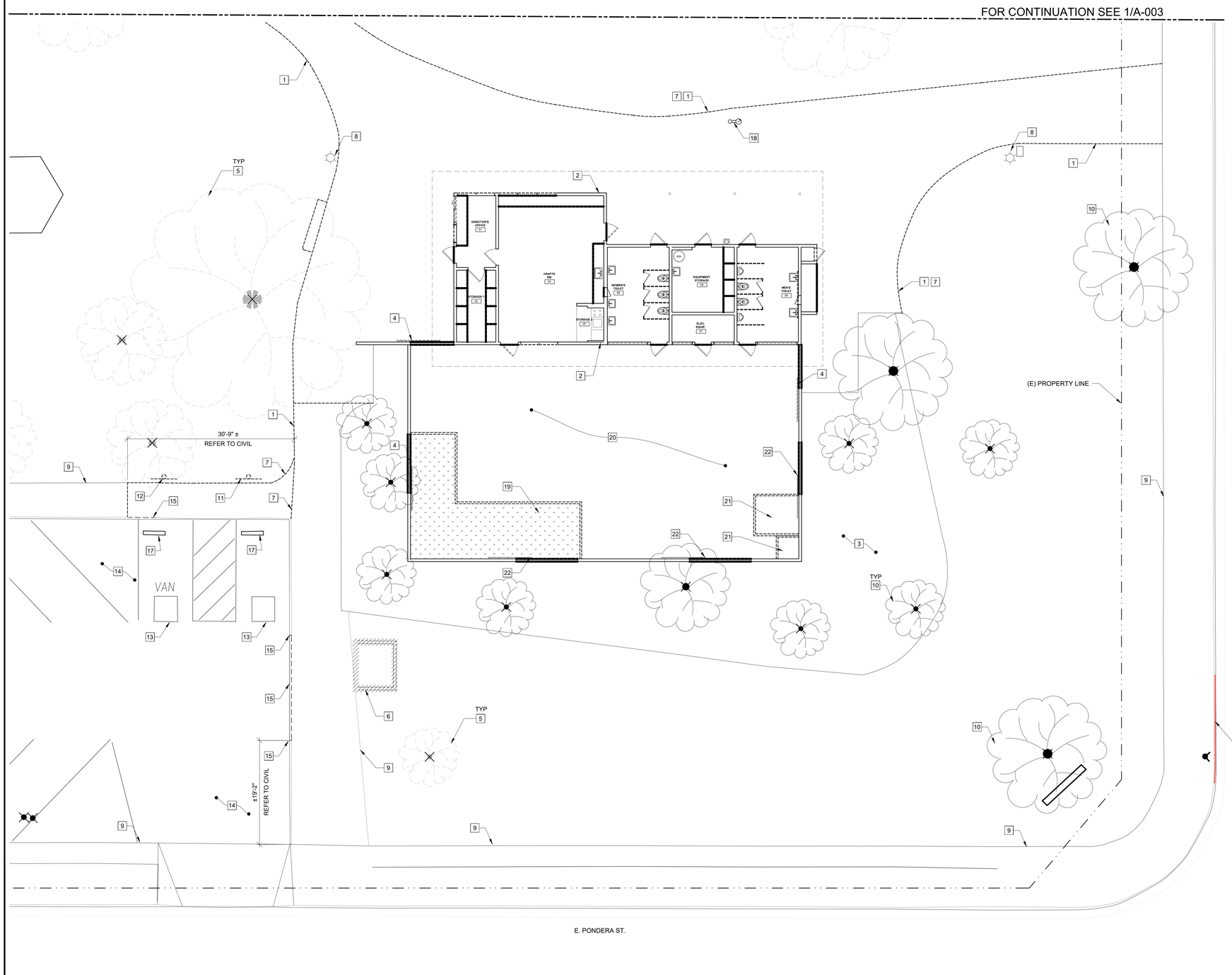

BUILDING DEMOLITION PLAN | 1/8" = 1'-0" | 1

GENERAL NOTES

1. FIELD VERIFY ALL EXISTING CONDITIONS & IDENTIFY EXACT SCOPE OF WORK PRIOR TO "START OF WORK" AND NOTIFY THE CLIENT & ARCHITECT IF THERE ARE ANY DISCREPANCIES.

2. THE GENERAL CONTRACTOR SHALL COORDINATE ANY DEMOLITION OF HVAC/MECHANICAL, AND ELECTRICAL SCOPE OF WORK WITH ENGINEERS DRAWINGS.

3. THE GENERAL CONTRACTOR MUST ALLOW FOR ADDITIONAL DEMOLITION THAT MAY NOT BE SHOWN, BUT MAY BE REQUIRED TO ACHIEVE THE FINISHED RESULT, AS SHOWN ON THE DRAWINGS.

4. ALL EXISTING WORK TO REMAIN, UNLESS OTHERWISE NOTED.

5. PROTECT IN PLACE ALL EXISTING FLOOR STRUCTURAL SYSTEM, INCLUDING . DO NOT DISTURB OR DAMAGE ANY EXISTING STRUCTURAL ELEMENTS.

6. ALL DEMOLITION WORK SHALL BE IN ACCORDANCE WITH THE CALIFORNIA FIRE CODE, 2022 EDITION, SECTION 1.1.3 (INCLUDING ARTICLE 87).ALL DEMOLITION WORK SHALL BE IN ACCORDANCE WITH THE CALIFORNIA BUILDING CODE, 2019 EDITION, CHAPTER 33.

7. REMOVE EXISTING PARTITIONS / PORTIONS OF PARTITIONS THROUGHOUT DESIGNATED SCOPE OF WORK AS NOTED. PROTECT ADJACENT CONSTRUCTION / EXISTING MILLWORK AND/OR FURNITURE.

8. REMOVE ALL DEBRIS. NO DEBRIS SHALL BE LEFT OR REMAIN IN THE PASSAGEWAY DURING CONSTRUCTION. TRASH REMOVAL IS THE RESPONSIBILITY OF THE GENERAL CONTRACTOR.

12.CONTRACTOR TO COORDINATE WITH CITY FACILITIES MANAGER FOR ASBESTOS AND LEAD REPORTS AND ABATEMENT INFORMATION PRIOR TO DEMOLITION.

DEMOLITION KEYNOTES

1. REMOVE EXISTING CONCRETE PATHWAYS AND SIDEWALKS.
2. EXISTING COMMUNITY CENTER BUILDING TO REMAIN.
3. EXISTING LANDSCAPE TO REMAIN.
4. EXISTING GATE TO BE REMOVED.
5. EXISTING TREE TO BE REMOVED, COORDINATE WITH LANDSCAPE.
6. REMOVE EXISTING TRASH ENCLOSURE.
7. REMOVE EXISTING CONCRETE SLAB ON GRADE
8. EXISTING LIGHT POLE FIXTURES TO BE REMOVED. (SEE ELECTRICAL DRAWINGS)
9. EXISTING CONCRETE SIDEWALK TO REMAIN (PROTECT IN PLACE)
10. EXISTING TREE TO REMAIN, COORDINATE WITH LANDSCAPE.
11. REMOVE/RELOCATE EXISTING ACCESSIBLE PARKING SIGN
12. EXISTING ACCESSIBLE PARKING SIGN TO REPLACE WITH VAN ACCESSIBLE PARKING SIGN.
13. EXISTING ACCESSIBLE ADA PARKING STALL TO REMAIN
14. EXISTING PARKING-LOT ASPHALT TO REMAIN (NOT IN SCOPE OF WORK) PROTECT IN PLACE
15. REMOVE EXISTING CONCRETE CURB
16. EXISTING RED FIRE LANE
17. EXISTING WHELL STOP TO REMAIN
18. EXISTING DRINKING FOUNTAIN TO REMAIN. (REMOVE AND PROTECT DURING CONSTRUCTION AND REINSTALL.)
19. EXISTING PLANTER TO BE DEMOLISHED.
20. EXISTING CONCRETE AND TILE FLOORING TO BE DEMOLISHED THROUGH OUT THE PATIO.
21. EXISTING STORAGE TO BE REMOVED.
22. IN ORDER TO REPAVE THE PATIO, REMOVE EXISTING GATE AND SAFELY STORE DURING CONSTRUCTION & REINSTALL.

LEGEND

EXISTING TO BE DEMOLISHED

EXISTING TO REMAIN -PROTECT IN PLACE.

EXISTING TREE TO BE REMOVED

APPROVAL

CITY APPROVED BY:

DIRECTOR OF PUBLIC WORKS — DATE

CITY REVIEWED BY:

SENIOR ENGINEER — DATE

SUBMITTED BY:

DATE

CLIENT

LANCASTER
Creating a better tomorrow. Together.

CITY OF LANCASTER

44933 FERN AVENUE
LANCASTER, CA 93534

PROJECT NAME

SAMARITAN'S PURSE PARK FORMERLY KNOWN AS EL DORADO PARK RENOVATION

PWCP NO. 24-008

44501 5th STREET EAST
LANCASTER, CA 93535

ENGINEER/ARCHITECT

IDS

IDS GROUP

1 PETERS CANYON ROAD, SUITE 130
IRVINE, CA. 92606
TEL: 949-387-8500, FAX: 949-387-0800

STAMP

LICENSED ARCHITECT — JOSEPH DI MARTINO — REG. C-31-25 — STATE OF CALIFORNIA

DATE SIGNED: 02/26/2024

ISSUE

REV.	DESCRIPTION	DATE
	30% CD SET	12/15/23
	60% CD SET	01/19/24
	90% CD SET	02/26/24
1	CLIENT REVISION	04/26/24
	COMPOSITE SET	9/24/25

PROJECT IDENTIFICATION

THIS DRAWING WAS CREATED IN AUTODESK AUTOCAD V. 2021 UNLESS OTHERWISE NOTED.

THE ORIGINAL SIZE OF THIS SHEET IS 30" X 42"

THESE DRAWINGS AND SPECIFICATIONS ARE THE PROPERTY AND COPYRIGHT OF IDS GROUP AND SHALL NOT BE USED ON ANY OTHER PROJECT OR LOCATIONS EXCEPT AS DESCRIBED ON THE DRAWINGS, WITHOUT THE WRITTEN AGREEMENT WITH IDS GROUP.

IDS PROJECT NO.	22X099.01
IDS DRAWN BY	MJ
IDS CHECKED BY	MM
IDS APPROVED BY	MM

SHEET TITLE

SITE DEMOLITION PLAN

SHEET NUMBER

A-002

SHEET NO. XXX OF XXX

CUMULATIVE SHEET NO. XXX OF XXX

PROGRESS SET - NOT FOR CONSTRUCTION

IDS GROUP - FILE LOCATION: S:\PROJECTS\2022\SHARED\22X099.01 LANC - EL DORADO PARK\05 CAD\01 ARCH\01 ARCH FOR EXISTING BLDG\A-001_SITE-DEMOLITION-PLAN PLOT DATE: 4/25/2024 1:51:55 PM USER: MAHSA JAVAHERIAN

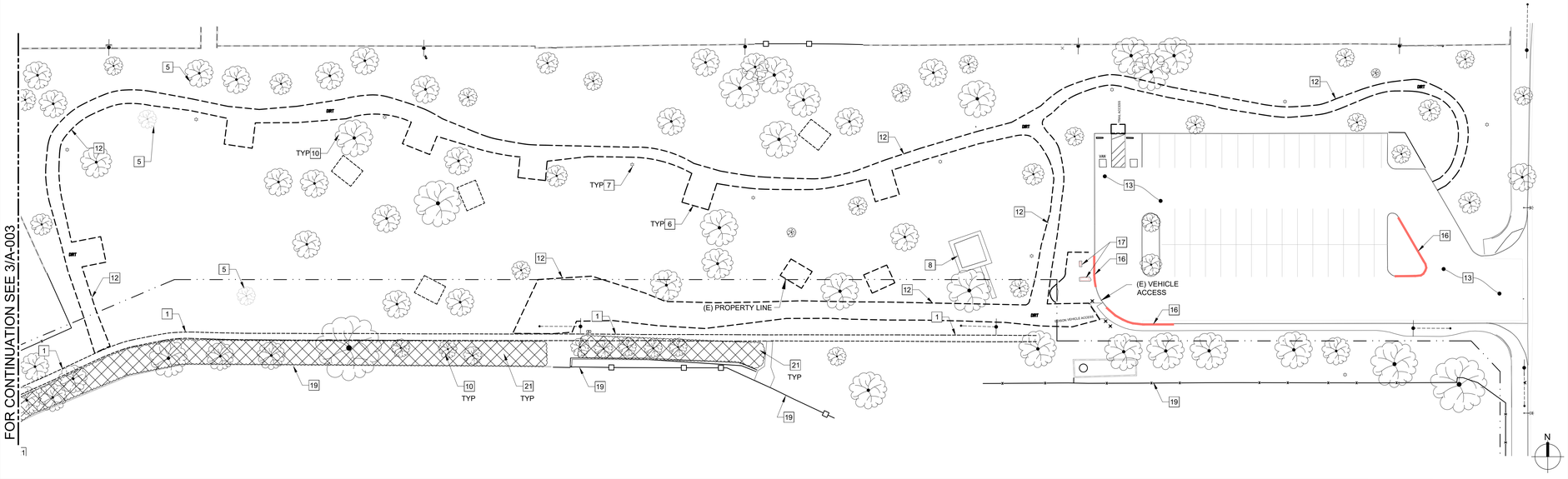

EXISTING / DEMOLITION SITE PLAN | 1" = 30'-0" | 2

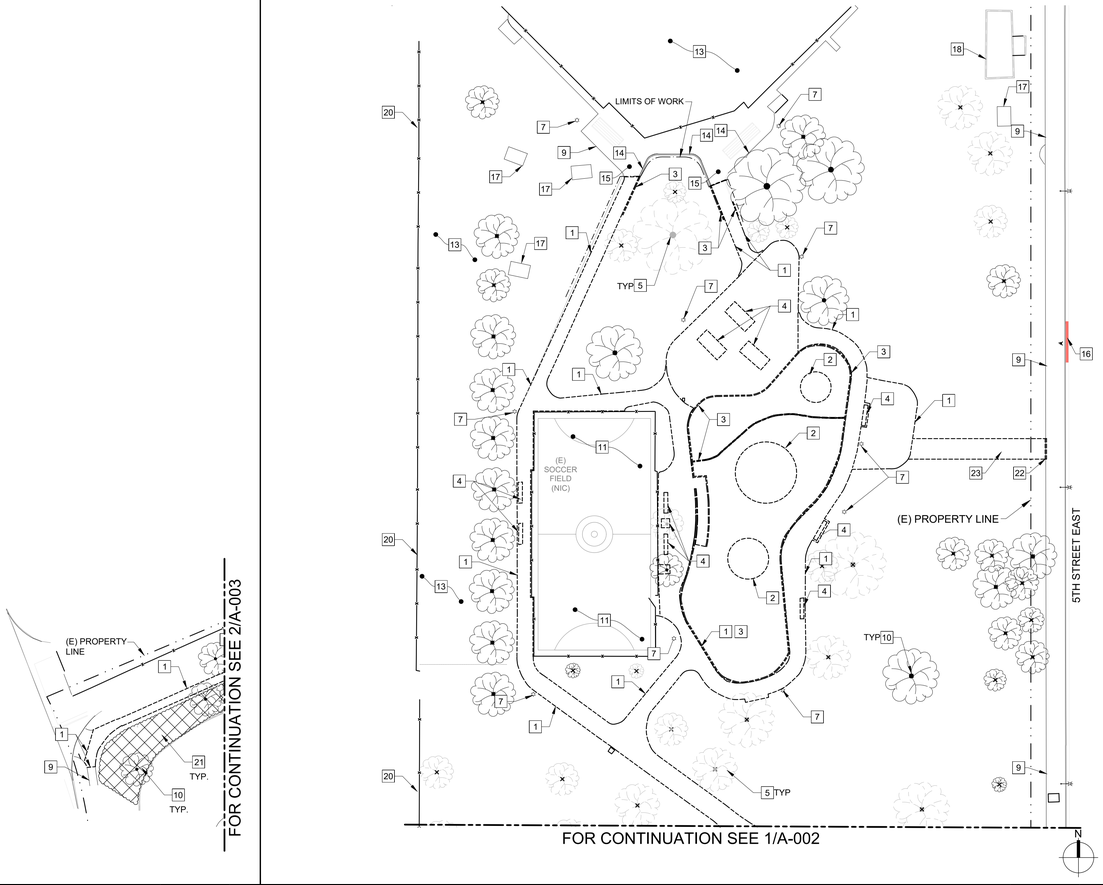

EXISTING / DEMOLITION SITE PLAN | 1" = 30'-0" | 1

EXISTING / DEMOLITION SITE PLAN | 1" = 30'-0" | 3

GENERAL NOTES

1. FIELD VERIFY ALL EXISTING CONDITIONS & IDENTIFY EXACT SCOPE OF WORK PRIOR TO "START OF WORK" AND NOTIFY THE CLIENT & ARCHITECT IF THERE ARE ANY DISCREPANCIES.

2. THE GENERAL CONTRACTOR SHALL COORDINATE ANY DEMOLITION OF HVAC/MECHANICAL, AND ELECTRICAL SCOPE OF WORK WITH ENGINEERS DRAWINGS.

3. THE GENERAL CONTRACTOR MUST ALLOW FOR ADDITIONAL DEMOLITION THAT MAY NOT BE SHOWN, BUT MAY BE REQUIRED TO ACHIEVE THE FINISHED RESULT, AS SHOWN ON THE DRAWINGS.

4. ALL EXISTING WORK TO REMAIN, UNLESS OTHERWISE NOTED.

5. PROTECT IN PLACE ALL EXISTING FLOOR STRUCTURAL SYSTEM, INCLUDING . DO NOT DISTURB OR DAMAGE ANY EXISTING STRUCTURAL ELEMENTS.

6. ALL DEMOLITION WORK SHALL BE IN ACCORDANCE WITH THE CALIFORNIA FIRE CODE, 2022 EDITION, SECTION 1.1.3 (INCLUDING ARTICLE 87).ALL DEMOLITION WORK SHALL BE IN ACCORDANCE WITH THE CALIFORNIA BUILDING CODE, 2019 EDITION, CHAPTER 33.

7. REMOVE EXISTING PARTITIONS / PORTIONS OF PARTITIONS THROUGHOUT DESIGNATED SCOPE OF WORK AS NOTED. PROTECT ADJACENT CONSTRUCTION / EXISTING MILLWORK AND/OR FURNITURE.

8. EXISTING EXTERIOR SHELL WINDOW SYSTEM, WALLS, AND COLUMNS TO REMAIN AS SHOWN; PROTECT IN PLACE DURING DEMOLITION.

9. REMOVE ALL DEBRIS. NO DEBRIS SHALL BE LEFT OR REMAIN IN THE PASSAGEWAY DURING CONSTRUCTION. TRASH REMOVAL IS THE RESPONSIBILITY OF THE GENERAL CONTRACTOR.

12. CONTRACTOR TO COORDINATE WITH CITY FACILITIES MANAGER FOR ASBESTOS AND LEAD REPORTS AND ABATEMENT INFORMATION PRIOR TO DEMOLITION.

DEMOLITION KEYNOTES

1. REMOVE EXISTING CONCRETE PATHWAYS AND SIDEWALKS.
2. REMOVE EXISTING PLAYGROUND EQUIPMENT AND ASSOCIATED GROUND COVER.
3. REMOVE EXISTING CONCRETE WALL COORDINATE WITH CIVIL.
4. REMOVE EXISTING STREET FURNITURE (PIC NIC TABLES, BENCHES, TRASH RECEPTACLES & WATER FOUNTAINS).
5. EXISTING TREE TO BE REMOVED, COORDINATE WITH LANDSCAPE.
6. REMOVE EXISTING EXERCISE EQUIPMENT AND ASSOCIATED CONCRETE PAD.
7. EXISTING LIGHT FIXTURES TO BE REMOVED. (SEE ELECTRICAL DRAWINGS).
8. MAINTAIN AND PROTECT IN-PLACE EXISTING WOOD PICNIC SHELTER (NORTH PARK TRAIL AREA).
9. EXISTING CONCRETE SIDEWALK TO REMAIN (PROTECT IN PLACE)
10. EXISTING TREE TO REMAIN
11. MAINTAIN AND PROTECT IN-PLACE EXISTING SOCCER COURT AND ASSOCIATED FENCING.
12. EXISTING WALK RAIL TO BE REMOVED, COORDINATE WITH LANDSCAPE AND CIVIL.
13. AREA NOT IN SCOPE OF WORK.
14. EXISTING CONCRETE WALL TO REMAIN. COORDINATE WITH CIVIL.
15. EXISTING CONCRETE SLAB ON GRADE TO REMAIN
16. EXISTING RED FIRE LANE
17. EXISTINB CONCRETE PAD TO REMAIN
18. EXISTING CELL TOWER EQUIPMENT TO REMAIN
19. EXISTING BALL FIELD FENCE (NOT IN CONSTRACT)
20. EXISTING FENCE TO REMAIN (NOT IN CONTRACT)
21. EXISTING BUSHES TO BE REMOVED SEE LANDSCAPE.
22. EXISTING CURB TO BE DEMOLISHED AND PREPARE FOR THE SIDEWALK CONNECTION.
23. EXISTING TURF TO BE DEMOLISHED. SEE LANDSCAPE.

LEGEND

EXISTING TO BE DEMOLISHED

EXISTING TO REMAIN -PROTECT IN PLACE.

EXISTING TREE TO BE REMOVED

APPROVAL

CITY APPROVED BY:

DIRECTOR OF PUBLIC WORKS — DATE

CITY REVIEWED BY:

SENIOR ENGINEER — DATE

SUBMITTED BY:

DATE

CLIENT

LANCASTER
Creating a better tomorrow. Together.

CITY OF LANCASTER

44933 FERN AVENUE
LANCASTER, CA 93534

PROJECT NAME

SAMARITAN'S PURSE PARK FORMERLY KNOWN AS EL DORADO PARK RENOVATION

PWCP NO. 24-008

44501 5th STREET EAST
LANCASTER, CA 93535

ENGINEER/ARCHITECT

IDS

IDS GROUP

1 PETERS CANYON ROAD, SUITE 130
IRVINE, CA. 92606
TEL: 949-387-8500, FAX: 949-387-0800

STAMP

LICENSED ARCHITECT JOSEPH SUH STATE OF CALIFORNIA
REN. 7-31-25

DATE SIGNED: 02/26/2024

ISSUE

REV.	DESCRIPTION	DATE
	30% CD SET	12/15/23
	60% CD SET	01/19/24
	90% CD SET	02/26/24
1	CLIENT REVISION	04/26/24
2	BID SET	09/10/24
3	BULLETIN #1	10/25/24

PROJECT IDENTIFICATION

THIS DRAWING WAS CREATED IN AUTODESK AUTOCAD V. 2021 UNLESS OTHERWISE NOTED.

THE ORIGINAL SIZE OF THIS SHEET IS 30" X 42"

THESE DRAWINGS AND SPECIFICATIONS ARE THE PROPERTY AND COPYRIGHT OF IDS GROUP AND SHALL NOT BE USED ON ANY OTHER PROJECT OR LOCATIONS EXCEPT AS DESCRIBED ON THE DRAWINGS, WITHOUT THE WRITTEN AGREEMENT WITH IDS GROUP.

IDS PROJECT NO.	22X099.01
IDS DRAWN BY	MJ
IDS CHECKED BY	MM
IDS APPROVED BY	MM

SHEET TITLE

SITE DEMOLITION PLANS

SHEET NUMBER

A-003

SHEET NO. XXX OF XXX

CUMULATIVE SHEET NO. XXX OF XXX

PROGRESS SET - NOT FOR CONSTRUCTION

IDS GROUP - FILE LOCATION: S:\PROJECTS\2022\SHARED\22X099.01 LANC - EL DORADO PARK\05 CAD\01 ARCH\01 ARCH FOR EXISTING BLDG\A-001_SITE-DEMOLITION-PLAN PLOT DATE: 10/29/2024 4:18:38 PM USER: MAHSA JAVAHERIAN

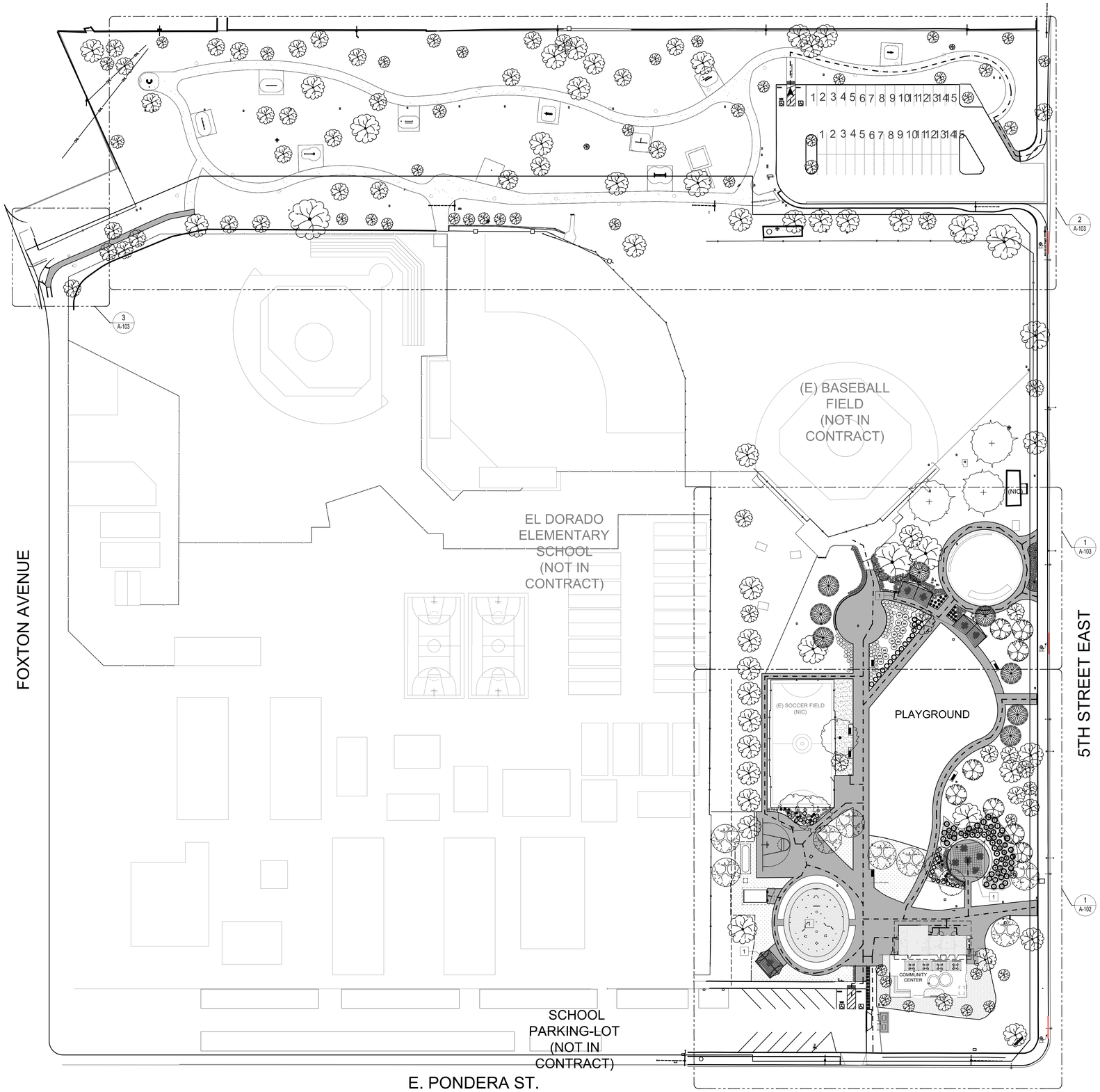

OVERALL SITE PLAN | 1" = 40'-0" | 1

KEYNOTES

1 THE SHADE & SPLASH PAD ARE DEFERRED SUBMITTALS.

NOTE:

ACCESSIBLE PATH OF TRAVEL AS INDICATED ON PLAN IS A BARRIER-FREE ACCESS ROUTE WITHOUT ABRUPT LEVEL CHANGES EXCEEDING 1/2" IF BEVELED AT 1:2 MAXIMUM SLOPE, OR VERTICAL LEVEL CHANGES NOT EXCEEDING 1/4" MAXIMUM AND AT LEAST 48" IN WIDTH. FINISH SURFACES ARE STABLE, FIRM, AND SLIP-RESISTANT. CROSS-SLOPE IS NOT STEEPER THAN 1:48 AND SLOPE IN THE DIRECTION OF TRAVEL IS NOT STEEPER THAN 1:20. ACCESSIBLE PATH OF TRAVEL SHALL BE MAINTAINED FREE OF OVERHANGING OBSTRUCTIONS TO LOWER THAN 80" AND PROTRUDING OBJECTS PROJECTING MORE THAN 4" HORIZONTALLY INTO THE CIRCULATION PATH BETWEEN 27" AND 80" ABOVE THE FINISH FLOOR OR GROUND.

LEGEND:

- (PTO) PATH OF TRAVEL PROVIDE SIGNS AT EXTERIOR DOORS
- LANDSCAPE, REFER TO LANDSCAPE DRAWINGS.
- CONCRETE SLAB ON GRADE. REFER TO CIVIL.
- EXISTING BUILDING
- WATER PARK, REFER TO WATER PARK (VERTEX) DRAWINGS
- SKATE PARK, REFER TO SKATE PARK DRAWINGS.
- FIRE HYDRANT

APPROVAL

CITY APPROVED BY:

DIRECTOR OF PUBLIC WORKS — DATE

CITY REVIEWED BY:

SENIOR ENGINEER — DATE

SUBMITTED BY:

DATE

CLIENT

LANCASTER
Creating a better tomorrow. Together.

CITY OF LANCASTER

44933 FERN AVENUE
LANCASTER, CA 93534

PROJECT NAME

SAMARITAN'S PURSE PARK FORMERLY KNOWN AS EL DORADO PARK RENOVATION

PWCP NO. 24-008

44501 5th STREET EAST
LANCASTER, CA 93535

ENGINEER/ARCHITECT

IDS

IDS GROUP

1 PETERS CANYON ROAD, SUITE 130
IRVINE, CA. 92606
TEL: 949-387-8500, FAX: 949-387-0800

STAMP

LICENSED ARCHITECT JOSEPH DERBIDIAN C-17572 REN. 7-31-25 STATE OF CALIFORNIA

DATE SIGNED: 02/26/2024

ISSUE

REV.	DESCRIPTION	DATE
	30% CD SET	12/15/23
	60% CD SET	01/19/24
	90% CD SET	02/26/24
1	CLIENT REVISION	04/26/24
2	BID SET	09/10/24
3	BULLETIN #1	10/25/24
4	BULLETIN #1 R1	2/14/25
	COMPOSITE SET	9/24/25

PROJECT IDENTIFICATION

THIS DRAWING WAS CREATED IN AUTODESK AUTOCAD V. 2021 UNLESS OTHERWISE NOTED.

THE ORIGINAL SIZE OF THIS SHEET IS 30" X 42"

THESE DRAWINGS AND SPECIFICATIONS ARE THE PROPERTY AND COPYRIGHT OF IDS GROUP AND SHALL NOT BE USED ON ANY OTHER PROJECT OR LOCATIONS EXCEPT AS DESCRIBED ON THE DRAWINGS, WITHOUT THE WRITTEN AGREEMENT WITH IDS GROUP.

IDS PROJECT NO.	22X099.01
IDS DRAWN BY	MJ
IDS CHECKED BY	MM
IDS APPROVED BY	MM

SHEET TITLE

OVERALL SITE PLAN

SHEET NUMBER

A-101

SHEET NO. XXX OF XXX

CUMULATIVE SHEET NO. XXX OF XXX

PROGRESS SET - NOT FOR CONSTRUCTION

IDS GROUP - FILE LOCATION: S:\PROJECTS\2022\SHARED\22X099.01 LANC - EL DORADO PARK\05 CAD\01 ARCH\01 ARCH FOR EXISTING BLDG\A-101_SITE-PLAN PLOT DATE: 10/29/2024 4:19:42 PM USER: MAHSA.JAVAHERIAN

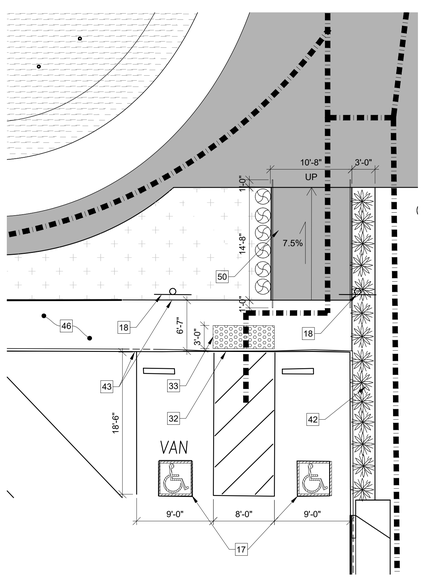

ADA PARKING & RAMP ENLARGED PLAN | 1/8" = 1'-0" | 2

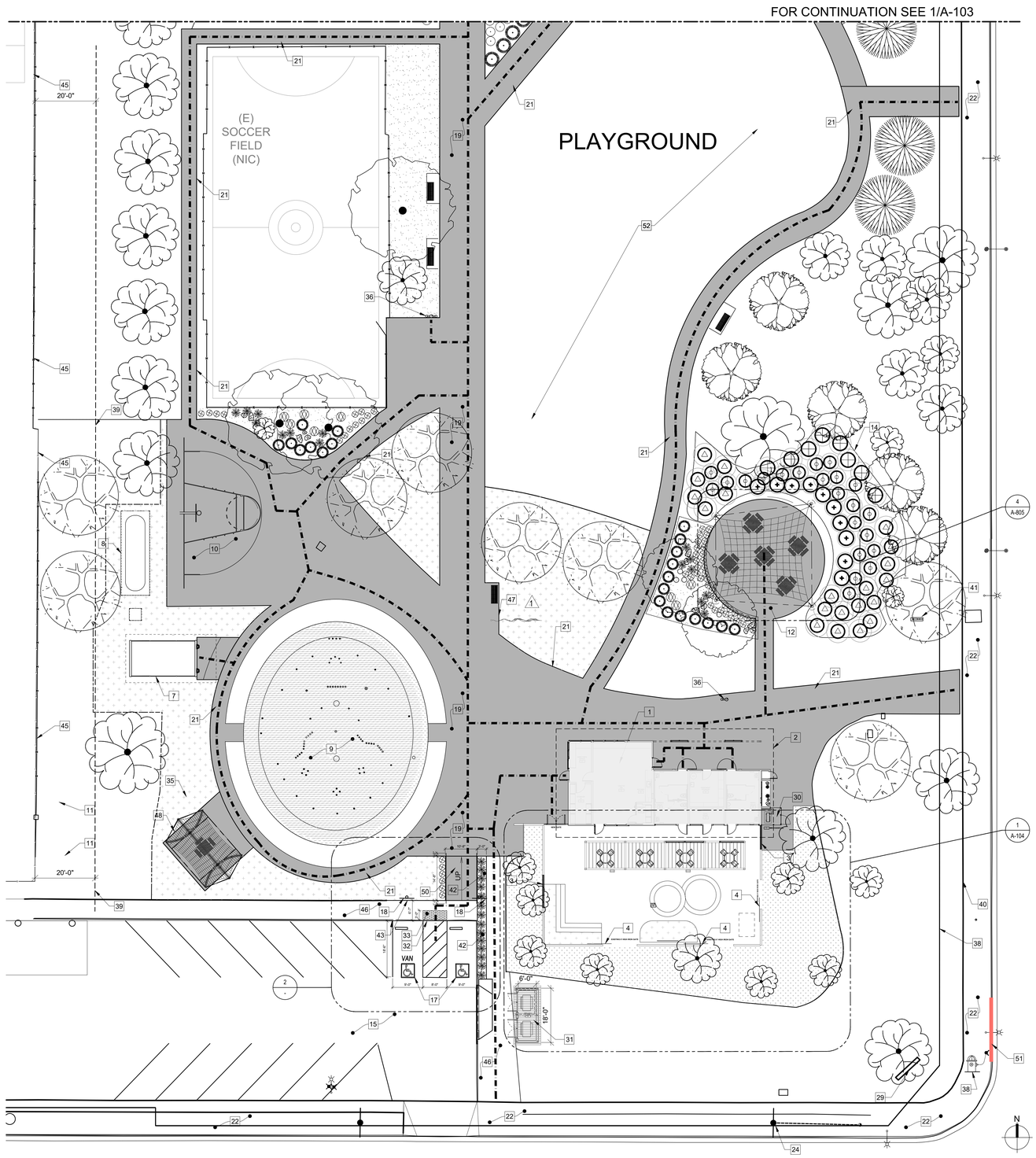

ENLRGED SITE PLAN - COMMUNITY CENTER AND SOUTH PARK | 1/16" = 1'-0" | 1

KEYNOTES

1. COMMUNITY CENTER BUILDING, REFER TO SHEET A-201 FOR ADDITIONAL INFORMATION
2. COMMUNITY CENTER BUILDING ROOF OVERHEAD
3. NEW 8" CMU WALL 6'-0" HEIGHT TO MATCH EXISTING WALL.
4. EXISTING SLIDING GATES.
7. PUMP HOUSE, REFER TO 1/A-801 FOR ADDITIONAL INFORMATION
8. SPLASH PAD UNDERGROUND TANK
9. SPLASH PAD AREA, CONCRETE SURFACE
10. HALF BASKETBALL COURT
11. ELECTRICAL OUTDOOR GEAR. REFER TO ELECTRICAL
12. PICNIC PLAZA WITH PICNIC TABLES WITH SHADE STRUCTURE
14. BIO BASIN/ RAIN GARDEN. REFER TO CIVIL
15. EXISTING SOUTH PARKING-LOT (NIC)
17. EXISTING ACCESSIBLE PARKING STALL
18. NEW ACCESSIBLE PARKING SIGNAGE
19. PEDESTRIAN CONCRETE WALK.
21. CONCRETE WALK
22. EXISTING CONCRETE SIDEWALK
24. EXISTING ELECTRICAL POLE TO REMAIN (PROTECT IN PLACE)
29. EXISTING BUILDING / PARK SIGNAGE TO PROTECT IN PLACE
30. NEW MECHANICAL PAD.
31. NEW TRASH ENCLOSURE
32. CONCRETE ZERO CURB
33. WARNING TRUNCATED DOMES
35. SITE LIGHTING POLE, REFER TO ELECTRICAL
36. EXISTING DRINKING FOUNTAIN TO REMAIN.
38. EXISTING FIRE HYDRANT
39. SETBACK 20'-0" FROM PROPERTY LINE
40. PROPERTY LINE, REFER TO CIVIL
41. REDUCED BACK FLOW PREVENTER, REFER TO CIVIL
42. PLANTER, REFER TO LANDSCAPE
43. CONCRETE CURB, REFER TO CIVIL
45. EXISTING SCHOOL FENCE
46. EXISTING CONCRETE WALK
47. FLAG POLE
48. SHADE STRUCTURE
50. CONCRETE RAMP WITH HANDRAILING. SEE DETAIL 3/G-011 & C-301.
51. EXISTING RED FIRE LINE. EXTEND AND/OR RELOCATE AS REQUIRED FOR NEW PATHWAY CONNECTIONS AND FIRE HYDRANTS AS REQUIRED. 3
52. PLAYGROUND PER CIVIL.

LEGEND

- (PTO) PATH OF TRAVEL PROVIDE SIGNS AT EXTERIOR DOORS
- LANDSCAPE, REFER TO LANDSCAPE DRAWINGS.
- CONCRETE SLAB ON GRADE. REFER TO CIVIL.
- EXISTING BUILDING
- WATER PARK, REFER TO WATER PARK (VERTEX) DRAWINGS
- SKATE PARK, REFER TO SKATE PARK DRAWINGS.
- FIRE HYDRANT

APPROVAL

CITY APPROVED BY:

DIRECTOR OF PUBLIC WORKS — DATE

CITY REVIEWED BY:

SENIOR ENGINEER — DATE

SUBMITTED BY:

DATE

CLIENT

LANCASTER
Creating a better tomorrow. Together.

CITY OF LANCASTER

44933 FERN AVENUE
LANCASTER, CA 93534

PROJECT NAME

SAMARITAN'S PURSE PARK FORMERLY KNOWN AS EL DORADO PARK RENOVATION

PWCP NO. 24-008

44501 5th STREET EAST
LANCASTER, CA 93535

ENGINEER/ARCHITECT

IDS

IDS GROUP

1 PETERS CANYON ROAD, SUITE 130
IRVINE, CA. 92606
TEL: 949-387-8500, FAX: 949-387-0800

STAMP

LICENSED ARCHITECT JOSEPH STIPP REG. 7-31-25 STATE OF CALIFORNIA

DATE SIGNED: 02/26/2024

ISSUE

REV.	DESCRIPTION	DATE
	30% CD SET	12/15/23
	60% CD SET	01/19/24
	90% CD SET	02/26/24
1	CLIENT REVISION	04/26/24
2	BID SET	09/10/24
3	BULLETIN #1	10/25/24
4	BULLETIN #1 R1	2/14/25
	COMPOSITE SET	9/24/25

PROJECT IDENTIFICATION

THIS DRAWING WAS CREATED IN AUTODESK AUTOCAD V. 2021 UNLESS OTHERWISE NOTED.

THE ORIGINAL SIZE OF THIS SHEET IS 30" X 42"

THESE DRAWINGS AND SPECIFICATIONS ARE THE PROPERTY AND COPYRIGHT OF IDS GROUP AND SHALL NOT BE USED ON ANY OTHER PROJECT OR LOCATIONS EXCEPT AS DESCRIBED ON THE DRAWINGS, WITHOUT THE WRITTEN AGREEMENT WITH IDS GROUP.

IDS PROJECT NO.	22X099.01
IDS DRAWN BY	MJ
IDS CHECKED BY	MM
IDS APPROVED BY	MM

SHEET TITLE

ENLRGED SITE PLAN - COMMUNITY CENTER AND SOUTH PARK

SHEET NUMBER

A-102

SHEET NO. XXX OF XXX

CUMULATIVE SHEET NO. XXX OF XXX

PROGRESS SET - NOT FOR CONSTRUCTION

IDS GROUP - FILE LOCATION: S:\PROJECTS\2022\SHARED\22X099.01 LANC - EL DORADO PARK\05 CAD\01 ARCH\01 ARCH FOR EXISTING BLDG\A-101_SITE-PLAN PLOT DATE: 10/29/2024 4:19:57 PM USER: MAHSA.JAVAHERIAN

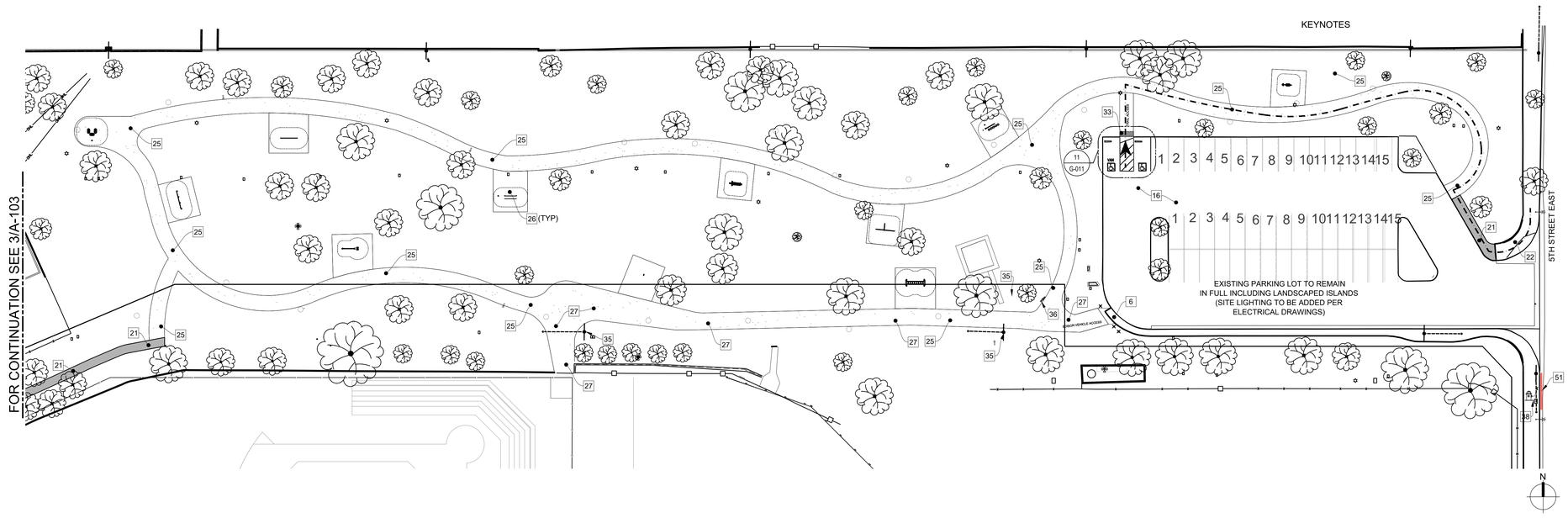

NORTH PARK SITE PLAN | 1" = 30'-0" | 2

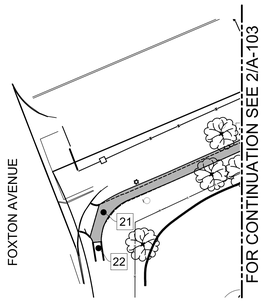

NORTH PARK SITE PLAN | 1" = 30'-0" | 3

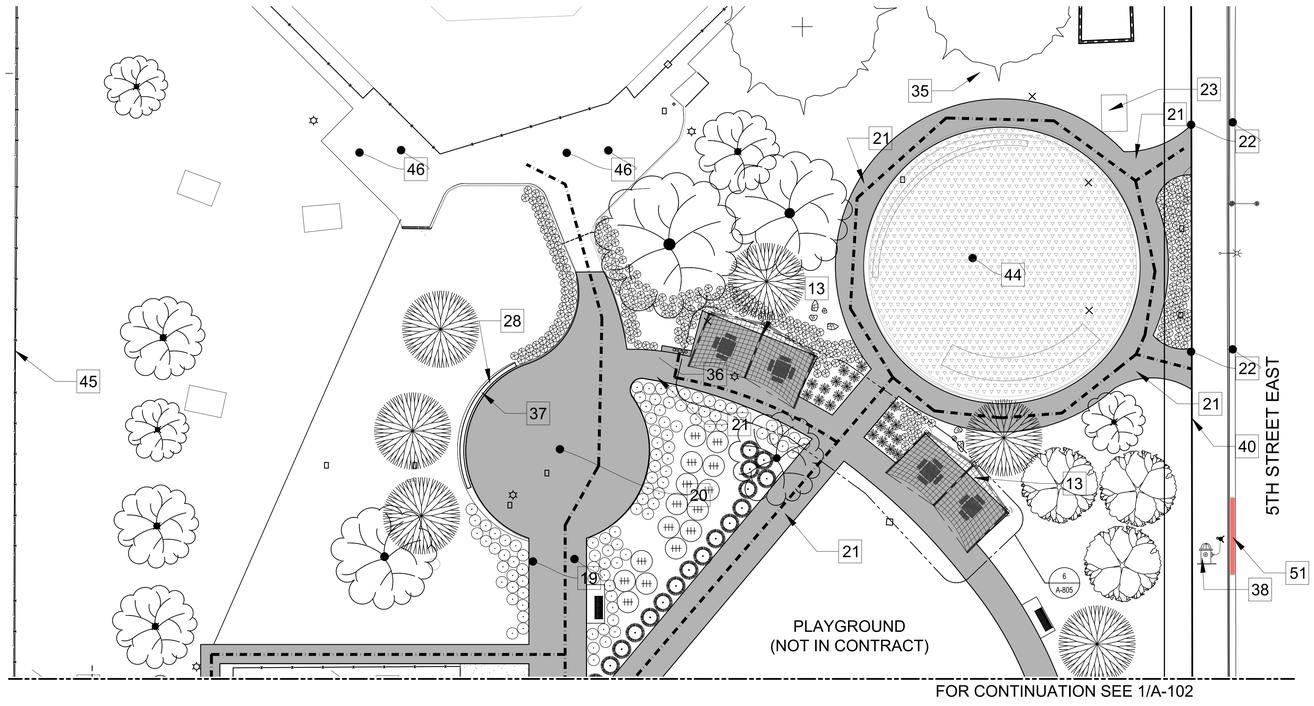

ENLARGED SITE PLAN - SKATE PARK | 1/16" = 1'-0" | 1

KEYNOTES

- 13 PICNIC SHELTER WITH SHADE STRUCTURE (TYPICAL OF 2)
- 16 EXISTING NORTH PARKTING-LOT (NIC)
- 19 PEDESTRIAN CONCRETE WALK.
- 20 PLAZA (PLAIN CONCRETE WALK).
- 21 CONCRETE WALK
- 22 EXISTING CONCRETE SIDEWALK
- 23 EXISTING ELECTRICAL EQUIPMENT (NIC) (PROTECT IN PLACE)
- 25 NORTH PARK TRAIL (DG) REFER TO CIVIL AND LANDSCAPE
- 26 NORTH PARK TRAIL EXERCISE EQUIPMENT WITH CONCRETE PAD. REFER TO CIVIL AND LANDSCAPE
- 27 NORTH PARK TRAIL MAINTANCE VEHICLE ACCESS SHARE PAD WITH TRAIL
- 28 MONUMENT CMU BLOCK WALL WITH CONCRETE SMOOTH FINISH. REFER TO CIVIL FOR MORE INFORMATION. PARCS TO COMMISSION ARTIST FOR MURAL. (1, 2)
- 35 SITE LIGHTING POLE, REFER TO ELECTRICAL
- 36 DRINKING FOUTAIN
- 37 FOCAL VIEW GRAPHICS MURAL
- 38 EXISTING FIRE HYDRANT
- 40 PROPERTY LINE, REFER TO CIVIL
- 44 SKATE PARK, REFER TO SPOHN RANCH SK DRAWINGS FOR ADDITIONAL INFORMATION ON SHEETS SK1.0, SK2.0, SK3.0, SK4.0, SK5.0, SK6.0, SK7.0, SK8.0, SK9.0..
- 45 EXISTING SCHOOL FENCE
- 46 EXISTING CONCRETE WALK
- 51 EXISTING RED FIRE LINE. EXTEND AND/OR RELOCATE AS REQUIRED FOR NEW PATHWAY CONNECTIONS AND FIRE HYDRANTS AS REQUIRED

LEGEND

- (PTO) PATH OF TRAVEL PROVIDE SIGNS AT EXTERIOR DOORS
- LANDSCAPE, REFER TO LANDSCAPE DRAWINGS.
- CONCRETE SLAB ON GRADE. REFER TO CIVIL.
- EXISTING BUILDING
- WATER PARK, REFER TO WATER PARK (VERTEX) DRAWINGS
- SKATE PARK, REFER TO SKATE PARK DRAWINGS.
- FIRE HYDRANT

APPROVAL

CITY APPROVED BY:

DIRECTOR OF PUBLIC WORKS — DATE

CITY REVIEWED BY:

SENIOR ENGINEER — DATE

SUBMITTED BY:

DATE

CLIENT

LANCASTER
Creating a better tomorrow. Together.

CITY OF LANCASTER
44933 FERN AVENUE
LANCASTER, CA 93534

PROJECT NAME

SAMARITAN'S PURSE PARK FORMERLY KNOWN AS EL DORADO PARK RENOVATION

PWCP NO. 24-008

44501 5th STREET EAST
LANCASTER, CA 93535

ENGINEER/ARCHITECT

IDS

IDS GROUP
1 PETERS CANYON ROAD, SUITE 130
IRVINE, CA. 92606
TEL: 949-387-8500, FAX: 949-387-0800

STAMP

LICENSED ARCHITECT JOSEPH SUH REN. 7-31-25 STATE OF CALIFORNIA

DATE SIGNED: 02/26/2024

ISSUE

REV.	DESCRIPTION	DATE
	30% CD SET	12/15/23
	60% CD SET	01/19/24
	90% CD SET	02/26/24
1	CLIENT REVISION	04/26/24
2	BID SET	09/10/24
3	BULLETIN #1	10/25/24
4	BULLETIN #1 R1	2/14/25
	COMPOSITE SET	9/24/25

PROJECT IDENTIFICATION

THIS DRAWING WAS CREATED IN AUTODESK AUTOCAD V. 2021 UNLESS OTHERWISE NOTED.

THE ORIGINAL SIZE OF THIS SHEET IS 30" X 42"

THESE DRAWINGS AND SPECIFICATIONS ARE THE PROPERTY AND COPYRIGHT OF IDS GROUP AND SHALL NOT BE USED ON ANY OTHER PROJECT OR LOCATIONS EXCEPT AS DESCRIBED ON THE DRAWINGS, WITHOUT THE WRITTEN AGREEMENT WITH IDS GROUP.

IDS PROJECT NO.	22X099.01
IDS DRAWN BY	MJ
IDS CHECKED BY	MM
IDS APPROVED BY	MM

SHEET TITLE

ENLARGED SITE PLANS - SKATE PARK AND NORTH PARK

SHEET NUMBER

A-103

SHEET NO. XXX OF XXX

CUMULATIVE SHEET NO. XXX OF XXX

PROGRESS SET - NOT FOR CONSTRUCTION

IDS GROUP - FILE LOCATION: S:\PROJECTS\2022\SHARED\22X099.01 LANC - EL DORADO PARK\05 CAD\01 ARCH\01 ARCH FOR EXISTING BLDG\A-101_SITE-PLAN PLOT DATE: 10/29/2024 4:20:14 PM USER: MAHSA.JAVAHERIAN

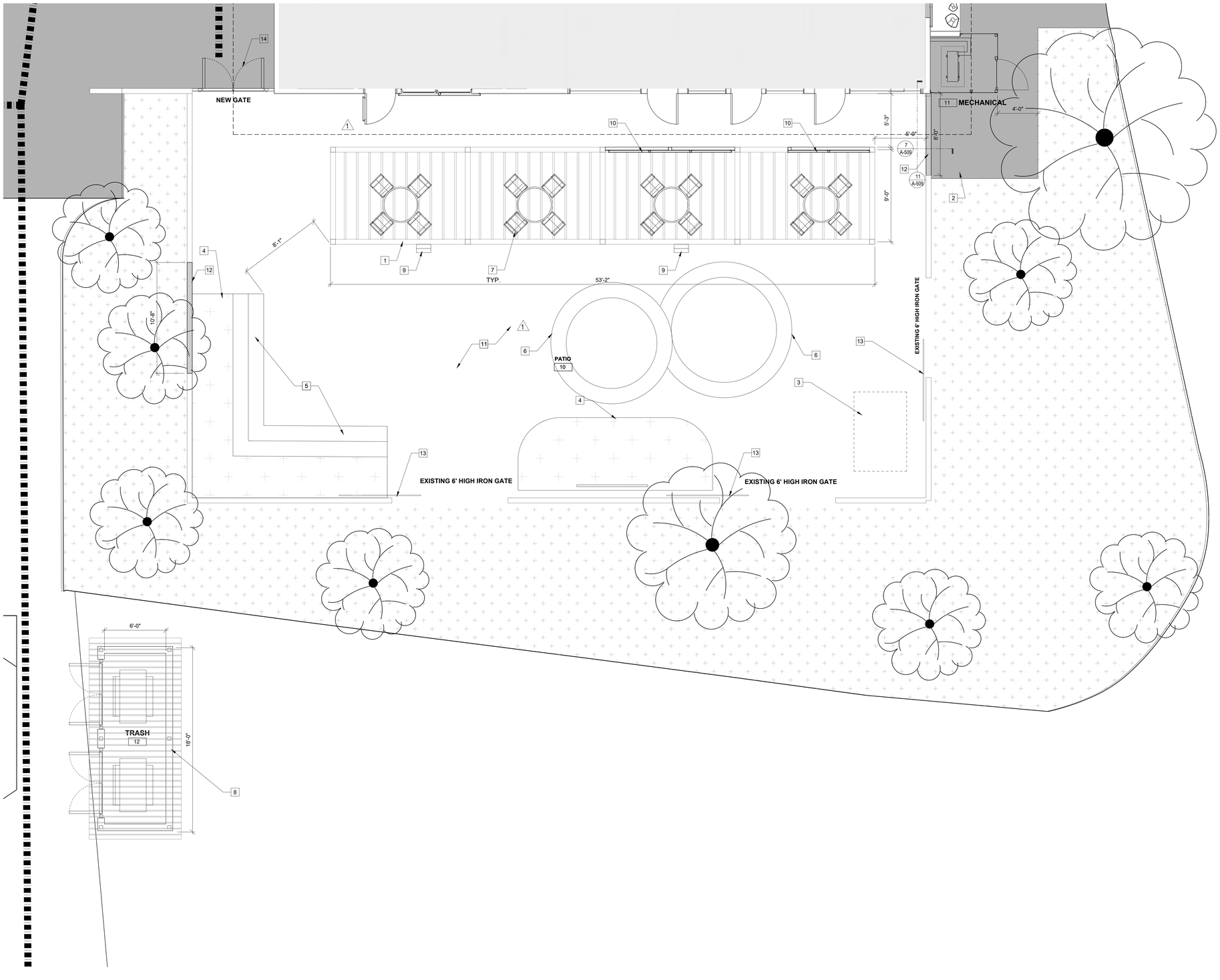

KEYNOTES

1. NEW METAL CANOPY, SEE SHEET A-911.
2. NEW MECHANICAL PAD.
3. EXISTING STORAGE BUILDING; RELOCATE AS SHOWN.
4. NEW LANDSCAPE. REFER TO LANDSCAPE DRAWINGS FOR MORE INFORMATION.
5. NEW AMPHITHEATER SEATING AREA. SEE LANDSCAPE.
6. BICYCLE TRACK/COLORED CONCRETE. SEE LANDSCAPE.
7. MOVABLE FURNITURE.
8. NEW TRASH AND ENCLOSURE. SEE 1/A-508.
9. NEW WALL LIGHT FIXTURES, SEE ELECTRICAL E-112.
10. NEW PERFORATED METAL SCREEN PANELS ATTACHED TO THE CANOPY. SEE 1/A-404.
11. NEW CONCRETE PAVING AT PATIO.
12. NEW CMU WALL TO MATCH EXISTING.
13. CLEAN THOROUGHLY AND POWER WASH THE EXISTING GATE AS REQUIRED TO RECEIVE NEW BLACK PAINT. INSTALL THE NEW LOCK PROVIDED BY CITY.
14. NEW GATE, SEE DOOR SCHEDULE.

LEGEND

- (PTO) PATH OF TRAVEL PROVIDE SIGNS AT EXTERIOR DOORS
- LANDSCAPE, REFER TO LANDSCAPE DRAWINGS.
- CONCRETE SLAB ON GRADE. REFER TO CIVIL.
- EXISTING BUILDING
- WATER PARK, REFER TO WATER PARK (VERTEX) DRAWINGS
- SKATE PARK, REFER TO SKATE PARK DRAWINGS.
- FIRE HYDRANT

ENLARGED COMMUNITY CENTER PATIO | 1/4" = 1'-0" | 1

APPROVAL

CITY APPROVED BY:

DIRECTOR OF PUBLIC WORKS — DATE

CITY REVIEWED BY:

SENIOR ENGINEER — DATE

SUBMITTED BY:

DATE

CLIENT

LANCASTER
Creating a better tomorrow. Together.

CITY OF LANCASTER

44933 FERN AVENUE
LANCASTER, CA 93534

PROJECT NAME

SAMARITAN'S PURSE PARK FORMERLY KNOWN AS EL DORADO PARK RENOVATION

PWCP NO. 24-008

44501 5th STREET EAST
LANCASTER, CA 93535

ENGINEER/ARCHITECT

IDS

IDS GROUP

1 PETERS CANYON ROAD, SUITE 130
IRVINE, CA. 92606
TEL: 949-387-8500, FAX: 949-387-0800

STAMP

LICENSED ARCHITECT
JOSEPH SILBER
REN. 7-31-25
STATE OF CALIFORNIA

DATE SIGNED: 02/26/2024

ISSUE

REV.	DESCRIPTION	DATE
	30% CD SET	12/15/23
	60% CD SET	01/19/24
	90% CD SET	02/26/24
1	CLIENT REVISION	04/26/24
2	BID SET	09/10/24
3	BULLETIN #1	10/25/24
4	BULLETIN #1 R1	2/14/25
	COMPOSITE SET	9/24/25

PROJECT IDENTIFICATION

THIS DRAWING WAS CREATED IN AUTODESK AUTOCAD V. 2021 UNLESS OTHERWISE NOTED.

THE ORIGINAL SIZE OF THIS SHEET IS 30" X 42"

THESE DRAWINGS AND SPECIFICATIONS ARE THE PROPERTY AND COPYRIGHT OF IDS GROUP AND SHALL NOT BE USED ON ANY OTHER PROJECT OR LOCATIONS EXCEPT AS DESCRIBED ON THE DRAWINGS, WITHOUT THE WRITTEN AGREEMENT WITH IDS GROUP.

IDS PROJECT NO.	22X099.01
IDS DRAWN BY	MJ
IDS CHECKED BY	MM
IDS APPROVED BY	MM

SHEET TITLE

ENLARGED COMMUNITY CENTER PATIO

SHEET NUMBER

A-104

SHEET NO. XXX OF XXX

CUMULATIVE SHEET NO. XXX OF XXX

PROGRESS SET - NOT FOR CONSTRUCTION

IDS GROUP - FILE LOCATION: S:\PROJECTS\2022\SHARED\22X099.01 LANC - EL DORADO PARK\05 CAD\01 ARCH\01 ARCH FOR EXISTING BLDG\A-101_SITE-PLAN PLOT DATE: 10/29/2024 4:20:26 PM USER: MAHSA.JAVAHERIAN

GENERAL NOTES

1. SEE G-001 SHEET FOR ADDITIONAL NOTES AND ABBREVIATIONS.
2. ALL EXISTING WORK TO REMAIN UNLESS OTHERWISE NOTED.
3. WHERE EXISTING CERAMIC TILE, FABRIC OR VINYL WALL COVERING IS SCHEDULED TO BE REMOVED, AND THE GYPSUM BOARD PAPER IS DAMAGED IN THE PROCESS, REMOVE EXISTING LAYER OF GYPSUM BOARD TO EXPOSE EXISTING METAL STUD FRAMING. PROVIDE NEW GYPSUM BOARD TO MATCH EXISTING, AND AT RATED ASSEMBLIES, PROTECT AND MAINTAIN EXISTING UL COMPONENTS AS REQUIRED TO RETAIN UL RATING.
4. PROTECT WORK AREA INCLUDING NEW AND EXISTING MATERIALS AND FINISHES FROM DAMAGE WHICH MAY OCCUR FROM CONSTRUCTION, DEMOLITION, DUST, WATER, ETC. PROVIDE AND MAINTAIN TEMPORARY BARRICADES, CLOSURE WALLS, AS REQUIRED TO PROTECT THE PUBLIC AND BUILDING OCCUPANTS DURING CONSTRUCTION. DAMAGE TO NEW AND EXISTING STRUCTURES, EQUIPMENT, MATERIALS AND FINISHES SHALL BE REPAIRED OR REPLACED TO THE SATISFACTION OF THE OWNER AT THE SOLE EXPENSE OF THE CONTRACTOR.
5. REMOVE EXISTING FINISH MATERIALS (INCLUDING WALLCOVERING, FLOOR FINISHES, WALL BASE, ETC) THROUGHOUT, U.O.N. PREPARE SURFACES FOR NEW FINISHES.
6. REMOVE AND DISCARD ALL FLOOR FINISHES AND WALL BASE AS WELL AS FLASH PATCH, MASTIC AND ADHESIVES DOWN TO THE STRUCTURAL CONCRETE FLOOR SLAB AND PREPARE FOR NEW FINISHES.
7. REMOVE ALL EXISTING MATERIALS CREATING UNEVEN, OUT OF TOLERANCE SUBSTRATE INCLUDING BUT NOT LIMITED TO FASTENERS, COVER PLATES, RESILIENT FLOORING, CARPET PAD, ETC.
8. ALL LIFE SAFETY DEVICES SHALL REMAIN ACTIVE DURING DEMOLITION AND CONSTRUCTION.

KEYNOTES

NO.	DESCRIPTION
1.1	REMOVE (E) DOOR, PREP TO RECEIVE NEW DOORS
1.2	REMOVE (E) RESTROOM PARTITIONS
1.3	REMOVE (E) WINDOW, PREP TO RECEIVE NEW WINDOW PER WINDOW SCHEDULE
1.4	REMOVE (E) PLUMBING FIXTURES & ACCESSORIES - SEE PLUMBING PLANS
1.5	REMOVE (E) COUNTERTOP AND CABINETS. PREP TO RECEIVE NEW COUNTERTOP AND CABINETS
1.6	(E) STRUCTURAL POST TO REMAIN. PROTECT IN PLACE. SAND & CLEAN, SEAL CRACKS & REPAIR/REPLACE DAMAGED AND PREP TO RECEIVE NEW PAINTING
1.7	REMOVE (E) FLOOR FINISHES. PREP TO RECEIVE NEW FLOORING
1.8	REMOVE (E) LOUVERS. PREP TO RECEIVE NEW LOUVERS PER WINDOW SCHEDULE
1.9	REMOVE & REPLACE (E) GYPSUM BOARD IN THE AREA OF (N) CONSTRUCTION, PREP TO RECEIVE NEW WALL FINISHES, TYP
1.10	REMOVE (E) COUNTERTOP. PREP TO RECEIVE NEW COUNTERTOP
1.11	REMOVE (E) STOVE & HOOD. COORDINATE WITH OWNER FOR STORAGE OR DISPOSAL. SEE MECHANICAL & ELECTRICAL PLANS
1.12	REMOVE (E) SHELVES, PREP TO RECEIVE NEW SHELVES
1.13	REMOVE (E) COUNTERTOP, BASE CABINETS, UPPER CABINETS & OTHER ELEMENTS ATTACHED ON THE WALL, PATCH AND REPAIR THE WALLS AS REQUIRED
1.14	REMOVE (E) COILING DOOR AND ITS HOUSING & METAL PLATE COVER, INFILL WITH NEW TEXTURED / PAINTED PLASTER & PLYWOOD SHEATHING & FRAMING TO MATCH ADJACENT SURFACES
1.15	REMOVE (E) FOLDING GATE, INFILL THE WALL TO MATCH EXISTING FRAMING AND FINISH
1.16	REMOVE (E) WALL FURRING
1.17	REMOVE (E) CONCRETE SLAB. SEE CIVIL PLANS
1.18	REMOVE (E) LOUVERS ABOVE DOOR, PREP TO RECEIVE NEW LOUVERS PER WINDOW SCHEDULE
1.19	ROOF ABOVE
1.20	REMOVE (E) WATER HEATER - SEE PLUMBING PLANS
1.21	SAW CUT (E) CONCRETE SLAB AND REMOVE (E) CONCRETE SLAB AND PREP TO RECEIVE (N) CONCRETE SLAB, SEE PLUMBING PLANS
1.22	REMOVE (E) PLUMBING FIXTURES & ACCESSORIES, PATCH AND REPAIR THE WALL AS REQUIRED. SEE PLUMBING PLANS

DEMOLITION FLOOR PLAN LEGEND

EXISTING CONSTRUCTION TO BE DEMOLISHED

EXISTING CONSTRUCTION TO REMAIN

SAW-CUT & REMOVE EXISTING CONCRETE SLAB CONTRACTOR TO CUT SLAB AS REQUIRED FOR ANY OTHER UNDERGROUND PIPING REQUIRED

G-01X 1 — PHOTO REFERENCE

ANNOTATIONS AND DEFINITIONS

D - DENOTES DEMOLITION
E - DENOTES EXISTING TO REMAIN
R - DENOTES RELOCATED

N

DEMOLITION FLOOR PLAN | 1/4" = 1'-0" | 1

APPROVAL

CITY APPROVED BY:

DIRECTOR OF PUBLIC WORKS — DATE

CITY REVIEWED BY:

SENIOR ENGINEER — DATE

SUBMITTED BY:

DATE

CLIENT

LANCASTER
Creating a better tomorrow. Together.

CITY OF LANCASTER

44933 FERN AVENUE
LANCASTER, CA 93534

PROJECT NAME

SAMARITAN'S PURSE PARK FORMERLY KNOWN AS EL DORADO PARK RENOVATION

PWCP NO. 24-008

44501 5TH ST EAST
LANCASTER, CA 93535

ENGINEER/ARCHITECT

IDS
IDS GROUP
1 PETERS CANYON ROAD, SUITE 130
IRVINE, CA 92606
TEL: 949-387-8500, FAX: 949-387-0800

STAMP

LICENSED ARCHITECT — JOSEPH SILBER — No. C-15573 — REN. 7-31-25 — STATE OF CALIFORNIA

ISSUE

REV.	DESCRIPTION	DATE
	30% CD SET	12/15/23
	60% CD SET	01/12/24
	90% CD SET	02/26/24
1	CLIENT REVISIONS	04/26/24
2	BID SET	09/10/24
3	BULLETIN #1	10/25/24
4	BULLETIN #1 R1	2/14/25
	COMPOSITE SET	9/24/25

PROJECT IDENTIFICATION

THIS DRAWING WAS CREATED IN REVIT V. 2020 UNLESS OTHERWISE NOTED.

THE ORIGINAL SIZE OF THIS SHEET IS 30" X 42"

THESE DRAWINGS AND SPECIFICATIONS ARE THE PROPERTY AND COPYRIGHT OF IDS GROUP AND SHALL NOT BE USED ON ANY OTHER PROJECT OR LOCATIONS EXCEPT AS DESCRIBED ON THE DRAWINGS, WITHOUT THE WRITTEN AGREEMENT WITH IDS GROUP.

IDS PROJECT NO.	22X099.03
IDS DRAWN BY	MJ
IDS CHECKED BY	MM
IDS APPROVED BY	JS

SHEET TITLE

(E) COMMUNITY CENTER - DEMOLITION PLAN

SHEET NUMBER

A-111

IDS GROUP - FILE LOCATION: C:\Users\mahsa.javaherian\Documents\22X099.01 LANC - EL DORADO PARK (E) COMMUNITY CENTER RENOVATION_ARCH_R22_mahsa.javaherian.rvt
PLOT DATE: 10/29/2024 4:31:50 PM
USER: Author

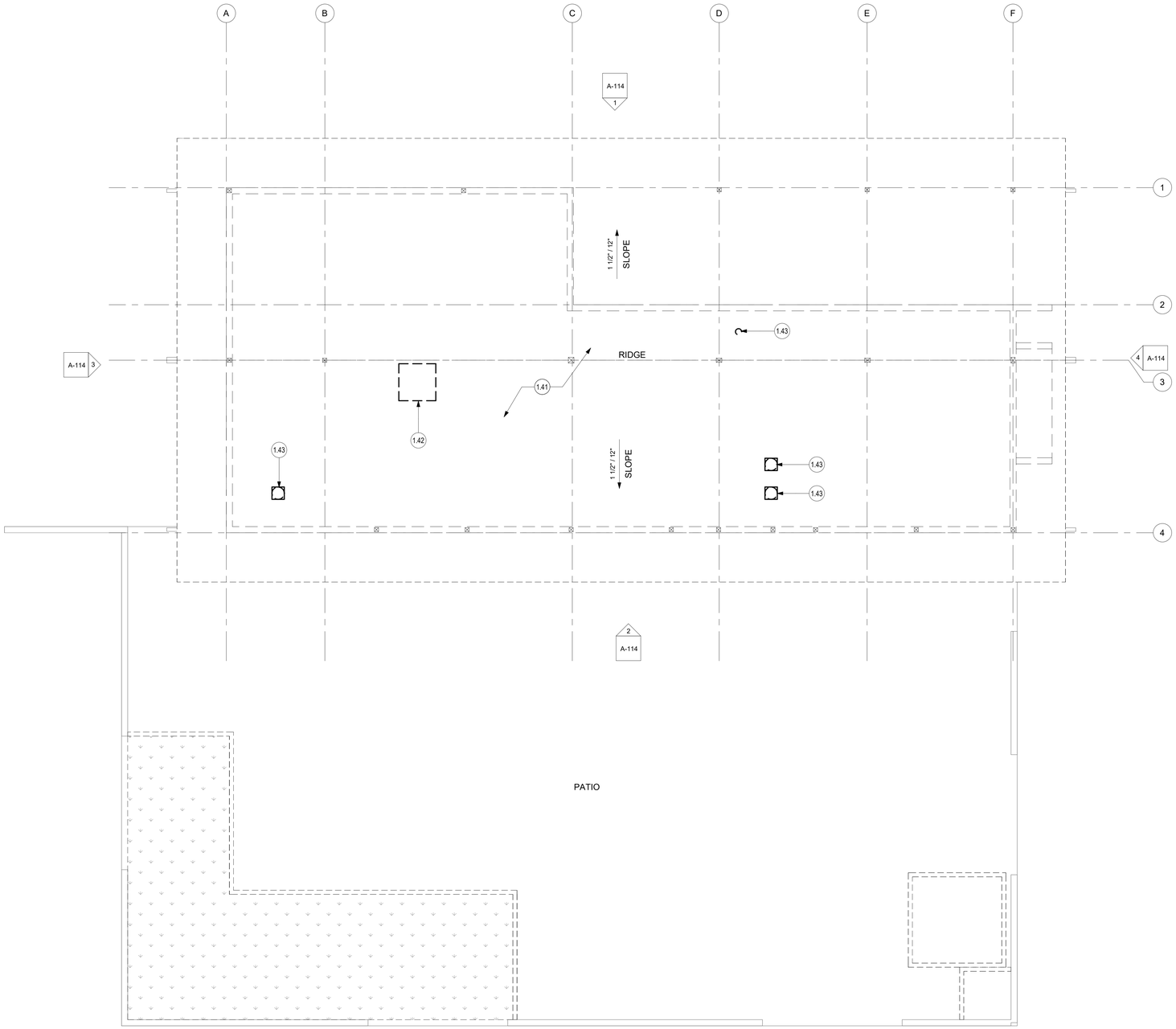

N

DEMOLITION ROOF PLAN | 1/4" = 1'-0" | 1

GENERAL NOTES

1. SEE G-001 FOR ABBREVIATIONS, SYMBOLS AND ADDITIONAL NOTES.

2. MAINTAIN EXISTING UL RATED ROOF DIAPHRAGM ASSEMBLY FOR ALL NEW WORK INCLUDING BUT NOT LIMITED TO PENETRATIONS AND SUPPORTS FOR PIPES, CONDUIT, DUCTWORK, EQUIPMENT SUPPORT AND WATERPROOFING / FLASHING ASSEMBLIES.

3. MAINTAIN POSITIVE DRAINAGE TO EXISTING ROOF DRAIN AND OVERFLOW DRAIN LOCATIONS. WHERE NEW WORK CONFLICTS WITH EXISTING DRAINAGE FLOW, PROVIDE CRICKETS AROUND OBSTRUCTIONS COMPATIBLE WITH EXISTING ROOF MEMBRANE ASSEMBLY AND SHEET METAL AND AIR CONDITIONING CONTRACTORS NATIONAL ASSOCIATION [SMACNA] STANDARDS FOR FLASHING FABRICATION AND ASSEMBLY. CRICKETS SHALL SLOPE ¼" / FOOT MIN.

4. DOCUMENT, COORDINATE AND SUBMIT FOR REVIEW NEW WORK INCLUDING BUT NOT LIMITED TO EQUIPMENT SUPPORTS, EQUIPMENT CLEARANCES FOR OPERATION AND MAINTENANCE, ROOF SCREEN SUPPORTS, SATELLITE DISH AND CELL TOWER SUPPORTS, AND UTILITY ROUGH-INS WHERE OCCUR PRIOR TO START OF WORK. PROVIDE 1/4" / FOOT MIN. SLOPE AT NEW CRICKET LOCATIONS TO FACILITATE POSITIVE DRAINAGE AROUND NEW EQUIPMENT PADS AND ROOF MOUNTED WORK.

5. UPTURN ROOF MEMBRANES WHERE REQUIRED BY NEW WORK 8" MIN.

6. PROVIDE OVERFLOW DRAINS 2" ABOVE ROOF DRAINS.

8. NEW ROOFING ASSEMBLY SHALL COMPLY WITH UL CLASS A FIRE RESISTIVE RATING.

9. DIMENSIONS SHOWN ARE FOR COORDINATION PURPOSES ONLY. SEE ENGINEERING DRAWINGS FOR ROOF PENETRATION ROUGH OPENING DIMENSIONS, EDGE OF DECK DIMENSIONS AND NEW FRAMING AROUND NEW ROOF PENETRATIONS WHERE OCCUR.

10. WHERE EXISTING CONDITIONS ARE DOCUMENTED, THEY ARE PROVIDED FOR THE PURPOSE OF COORDINATION ONLY AND DO NOT INCLUDE CONCEALED CONDITIONS OR EXISTING NON-COMPLIANT WORK.

11. WHERE EXISTING ROOF ASSEMBLY IS SHOWN TO REMAIN, OR BE MODIFIED, PROVIDE CUT / PATCH AND REPAIR WITH MATERIALS COMPATIBLE WITH EXISTING ASSEMBLY + SMACNA INCLUDE CUT / PATCH WORK IN WARRANTY FOR NEW WORK. MAINTAIN EXISTING UL RATING.

12. WHERE EXISTING MECHANICAL EQUIPMENT IS SHOWN TO BE REMOVED, PATCH AND REPAIR ROOFING MEMBRANE WITH NEW, COMPATIBLE MATERIALS TO MATCH EXISTING. MATCH EXISTING UL RATING. DIMENSIONS ARE SHOWN FOR COORDINATION PURPOSES ONLY. SEE ENGINEERING DRAWINGS FOR ROOF PENETRATION ROUGH OPENING DIMENSIONS, EDGE OF DECK DIMENSIONS AND NEW FRAMING AROUND NEW ROOF PENETRATIONS WHERE OCCUR. VERIFY DIMENSIONS PRIOR TO START OF WORK, NOTIFY OWNER/ARCHITECT IN WRITING WHERE CONFLICTS OCCUR PRIOR TO START OF WORK.

13.CONTRACTOR SHALL VERIFY SIZES AND LOCATIONS OF MECHANICAL/ROOF MOUNTED EQUIPMENT PLATFORMS, HOUSEKEEPING PADS, DRAIN LOCATIONS, POWER FEEDS, SEISMIC RESTRAINT AND INSTALLATION REQUIREMENTS WITH EQUIPMENT MANUFACTURER'S PRIOR TO START OF WORK.

KEYNOTES

NO.	DESCRIPTION
1.41	REMOVE (E) BUILT UP ROOFING & (E) RIGID INSULATION. (E) PLYWOOD SHEATHING & (E) ROOF FRAMING TO REMAIN. PROTECT IN PLACE. GC TO INSPECT ROOF AND INFORM ARCHITECT OF ANY PLYWOOD THAT IS DAMAGED. REPLACE AS REQUIRED
1.42	REMOVE (E) MECHANICAL EQUIPMENT - SEE MECHANICAL PLANS
1.43	REMOVE (E) VENTS. PATCH AND REPAIR ROOF TO MATCH EXISTING CONDITIONS - SEE MECHANICAL & PLUMBING PLANS

DEMOLITION ROOF LEGEND

WALLS BELOW

ANNOTATIONS AND DEFINITIONS

D - DENOTES DEMOLITION
E - DENOTES EXISTING TO REMAIN
R - DENOTES RELOCATED

APPROVAL

CITY APPROVED BY:

DIRECTOR OF PUBLIC WORKS DATE

CITY REVIEWED BY:

SENIOR ENGINEER DATE

SUBMITTED BY:

DATE

CLIENT

LANCASTER
Creating a better tomorrow. Together.

CITY OF LANCASTER

44933 FERN AVENUE
LANCASTER, CA 93534

PROJECT NAME

SAMARITAN'S PURSE PARK FORMERLY KNOWN AS EL DORADO PARK RENOVATION

PWCP NO. 24-008

44501 5TH ST EAST
LANCASTER, CA 93535

ENGINEER/ARCHITECT

IDS

IDS GROUP

1 PETERS CANYON ROAD, SUITE 130
IRVINE, CA 92606
TEL: 949-387-8500, FAX: 949-387-0800

STAMP

REGISTERED ARCHITECT
JOSEPH SHIBATA
No. 15573
REN. 7-31-25
STATE OF CALIFORNIA

ISSUE

REV.	DESCRIPTION	DATE
	30% CD SET	12/15/23
	60% CD SET	01/12/24
	90% CD SET	02/26/24
1	CLIENT REVISIONS	04/26/24
2	BID SET	09/10/24
3	BULLETIN #1	10/25/24
4	BULLETIN #1 R1	2/14/25
	COMPOSITE SET	9/24/25

PROJECT IDENTIFICATION

THIS DRAWING WAS CREATED IN REVIT V. 2020 UNLESS OTHERWISE NOTED.

THE ORIGINAL SIZE OF THIS SHEET IS 30" X 42"

THESE DRAWINGS AND SPECIFICATIONS ARE THE PROPERTY AND COPYRIGHT OF IDS GROUP AND SHALL NOT BE USED ON ANY OTHER PROJECT OR LOCATIONS EXCEPT AS DESCRIBED ON THE DRAWINGS, WITHOUT THE WRITTEN AGREEMENT WITH IDS GROUP.

IDS PROJECT NO.	22X099.03
IDS DRAWN BY	MJ
IDS CHECKED BY	MM
IDS APPROVED BY	JS

SHEET TITLE

(E) COMMUNITY CENTER - DEMOLITION ROOF PLAN

SHEET NUMBER

A-112

IDS GROUP - FILE LOCATION: C:\Users\mateus.javaherian\Documents\22X099.01 LANC - El DORADO PARK (E) COMMUNITY CENTER RENOVATION_ ARCH_R17\22X099_mateus.javaherianV0\22X099.rvt
PLOT DATE: 10/29/2024 4:31:51 PM
USER: Author

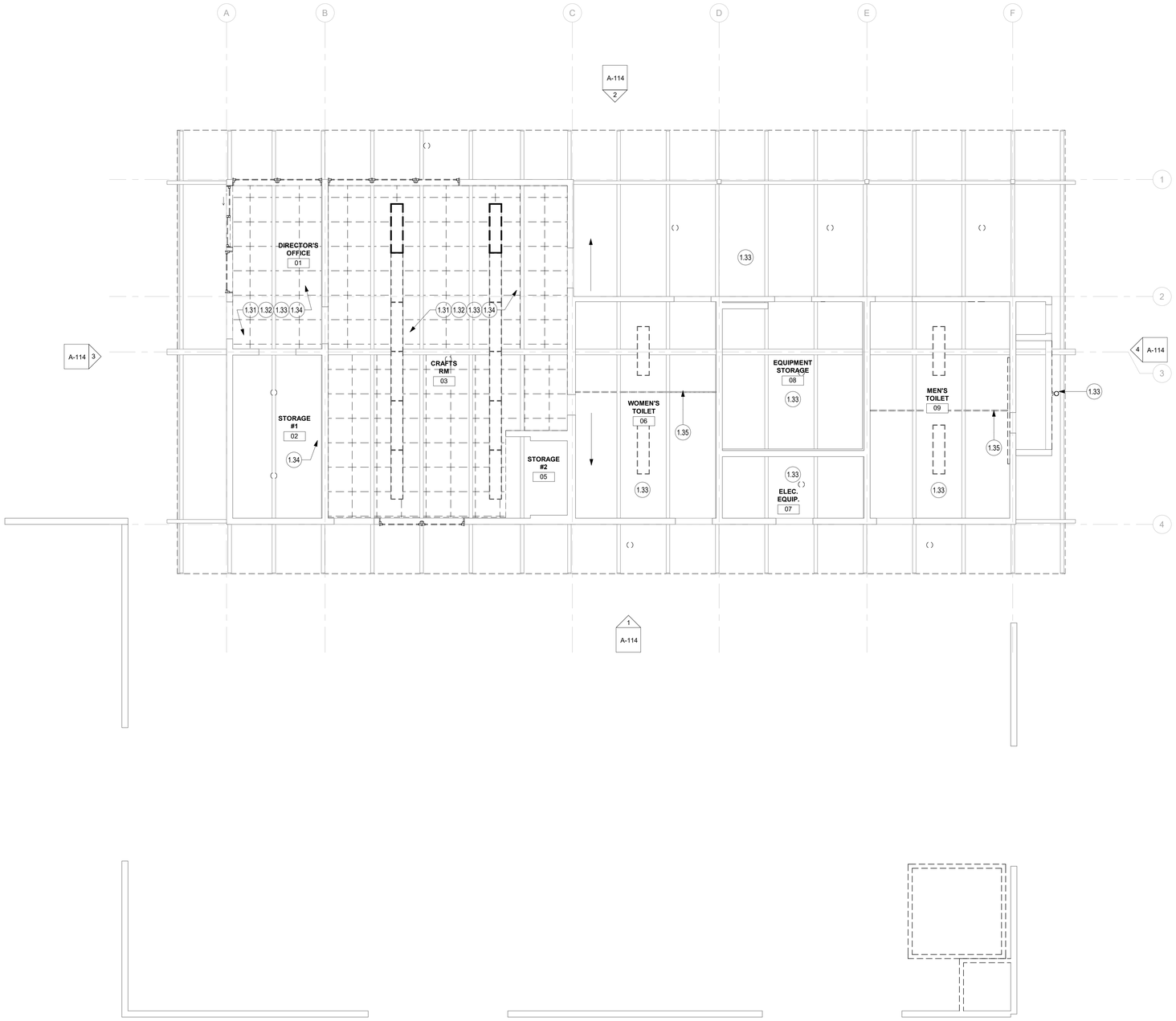

GENERAL NOTES

1. SEE SHEET G-001 FOR ADDITIONAL NOTES AND ABBREVIATIONS.
2. EXISTING CEILING TO REMAIN. WHERE NOTED TO BE REMOVED, REMOVE ALL WIRING AND SUPPORTS, CLEAN & PREPARE FOR NEW WORK. BRACING TO REMAIN AT EXISTING CEILING HEIGHT PARTITIONS SCHEDULED TO REMAIN.
3. SEE ENGINEER'S DRAWINGS FOR ADDITIONAL INFORMATION REGARDING REMOVAL OF MEP DEVICES.
4. REMOVE GYPSUM WALLBOARD SOFFITS AND FRAMING AS NOTED ON THE PLANS.
5. SALVAGE EXISTING COMPLIANT FIRE ALARM DEVICES, EXIT SIGNS, LIGHTING AND HVAC DEVICES THAT ARE SCHEDULED FOR REMOVAL FOR REUSE, U.O.N.
6. REMOVE ALL EXISTING LIGHT FIXTURES AND LENSES (WHERE NOTED) AND STORE FOR FUTURE USE. ALL RELOCATED FIXTURES TO BE IN FULL OPERATING ORDER.
7. PROTECT EXISTING WINDOW COVERING DURING DEMOLITION AND CONSTRUCTION ACTIVITY. REPORT NON-SERVICEABLE OR DAMAGED LOCATIONS TO OWNER WHERE OCCURS PRIOR TO START OF WORK.
8. REMOVE ABANDONED PLENUM RATED TELEPHONE AND DATA CABLING WHERE DIRECTED BY OWNER AND/OR APPLICABLE OWNERS DATA/TELECOM VENDOR/SUBCONTRACTOR.
9. DUE TO CONCEALED CONDITIONS NO ATTEMPT HAS BEEN MADE TO DISTINGUISH BETWEEN FULL HEIGHT, THRU GRID AND CEILING HEIGHT PARTITIONS. INCLUDE DEMOLITION OF PARTITION RELATED ASSEMBLIES ABOVE THE CEILING PER AS-BUILT FIELD CONDITIONS WHERE PARTITIONS ARE SHOWN TO BE REMOVED.

KEYNOTES

NO.	DESCRIPTION
1.31	(E) VAULTED PLYWOOD CEILING & (E) ROOF FRAMING TO REMAIN, PROTECT IN PLACE. PATCH AND REPAIR (E) PLYWOOD CEILING AS REQUIRED. REPLACE IF DAMAGED
1.32	REMOVE (E) GLUED ON CEILING TILES. REMOVE EXCESS GLUE AND CLEAN. PREP TO RECEIVE NEW PAINT
1.33	REMOVE (E) LIGHTS. SEE ELECTRICAL PLANS
1.34	PREP (E) CEILINGS TO RECEIVE NEW PAINTING, TYPICAL THROUGHOUT AREA OF CONSTRUCTION
1.35	REMOVE (E) WIRE MESH PARTITION

DEMOLITION RCP LEGEND

(E) 2X2 GLUED ON CEILING TILE TO BE REMOVED

(E) VAULTED PLYWOOD CEILING TO REMAIN

(E) 1'X4' PENDANT LIGHT TO BE REMOVED

(E) DOWNLIGHT TO BE REMOVED

CEILING SLOPE

ANNOTATIONS AND DEFINITIONS

D - DENOTES DEMOLITION
E - DENOTES EXISTING TO REMAIN
R - DENOTES RELOCATED

N

DEMOLITION RCP | 1/4" = 1'-0" | 1

APPROVAL

CITY APPROVED BY:

DIRECTOR OF PUBLIC WORKS DATE

CITY REVIEWED BY:

SENIOR ENGINEER DATE

SUBMITTED BY:

DATE

CLIENT

LANCASTER
Creating a better tomorrow. Together.

CITY OF LANCASTER

44933 FERN AVENUE
LANCASTER, CA 93534

PROJECT NAME

SAMARITAN'S PURSE PARK FORMERLY KNOWN AS EL DORADO PARK RENOVATION

PWCP NO. 24-008

44501 5TH ST EAST
LANCASTER, CA 93535

ENGINEER/ARCHITECT

IDS

IDS GROUP

1 PETERS CANYON ROAD, SUITE 130
IRVINE, CA. 92606
TEL: 949-387-8500, FAX: 949-387-0800

STAMP

REGISTERED ARCHITECT
JOSEPH SERPA
No. C-35573
REN. 7-31-25
STATE OF CALIFORNIA

ISSUE

REV.	DESCRIPTION	DATE
	30% CD SET	12/15/23
	60% CD SET	01/12/24
	90% CD SET	02/26/24
1	CLIENT REVISIONS	04/26/24
2	BID SET	09/10/24
3	BULLETIN #1	10/25/24
4	BULLETIN #1 R1	2/14/25
	COMPOSITE SET	9/24/25

PROJECT IDENTIFICATION

THIS DRAWING WAS CREATED IN REVIT V. 2020 UNLESS OTHERWISE NOTED.

THE ORIGINAL SIZE OF THIS SHEET IS 30" X 42"

THESE DRAWINGS AND SPECIFICATIONS ARE THE PROPERTY AND COPYRIGHT OF IDS GROUP AND SHALL NOT BE USED ON ANY OTHER PROJECT OR LOCATIONS EXCEPT AS DESCRIBED ON THE DRAWINGS, WITHOUT THE WRITTEN AGREEMENT WITH IDS GROUP.

IDS PROJECT NO.	22X099.03
IDS DRAWN BY	MJ
IDS CHECKED BY	MM
IDS APPROVED BY	JS

SHEET TITLE

(E) COMMUNITY CENTER - DEMOLITION RCP

SHEET NUMBER

A-113

IDS GROUP - FILE LOCATION: C:\Users\mathias.javieherian\Documents\22X099.01 LANC - El DORADO PARK (E) COMMUNITY CENTER RENOVATION_ARCH_MV2022_mathias.javieherian\VIEW_R
PLOT DATE: 10/29/2024 4:31:52 PM
USER: Author

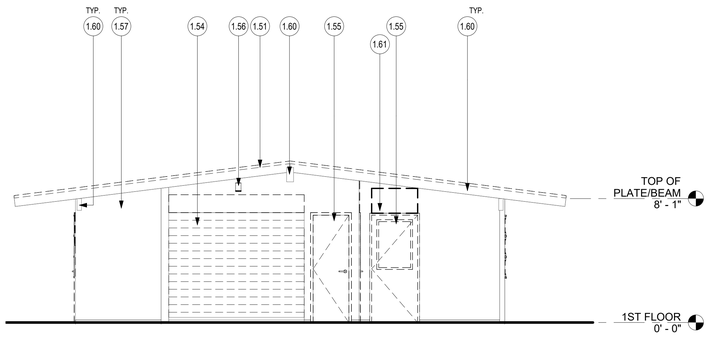

DEMO EAST ELEVATION | 1/4" = 1'-0" | 4

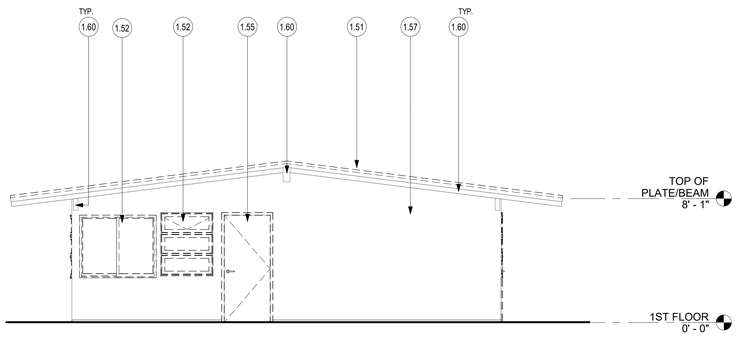

DEMO WEST ELEVATION | 1/4" = 1'-0" | 3

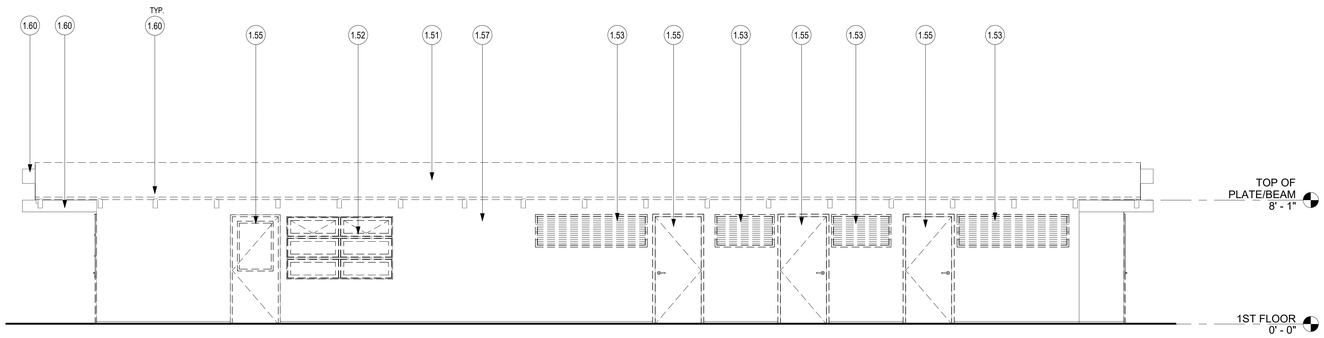

DEMO SOUTH ELEVATION | 1/4" = 1'-0" | 2

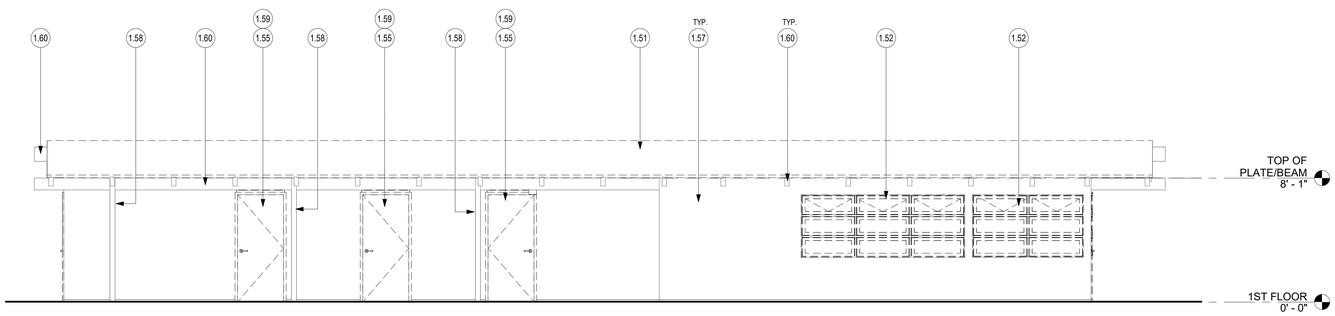

DEMO NORTH ELEVATION | 1/4" = 1'-0" | 1

GENERAL NOTES

1. SEE G-001 SHEET FOR ADDITIONAL NOTES AND ABBREVIATIONS.
2. ALL EXISTING WORK TO REMAIN UNLESS OTHERWISE NOTED.
3. PROTECT WORK AREA INCLUDING NEW AND EXISTING MATERIALS AND FINISHES FROM DAMAGE WHICH MAY OCCUR FROM CONSTRUCTION, DEMOLITION, DUST, WATER, ETC. PROVIDE AND MAINTAIN TEMPORARY BARRICADES, CLOSURE WALLS, AS REQUIRED TO PROTECT THE PUBLIC AND BUILDING OCCUPANTS DURING CONSTRUCTION. DAMAGE TO NEW AND EXISTING STRUCTURES, EQUIPMENT, MATERIALS AND FINISHES SHALL BE REPAIRED OR REPLACED TO THE SATISFACTION OF THE OWNER AT THE SOLE EXPENSE OF THE CONTRACTOR.
4. REMOVE ALL EXISTING MATERIALS CREATING UNEVEN, OUT OF TOLERANCE SUBSTRATE INCLUDING BUT NOT LIMITED TO FASTENERS, COVER PLATES, RESILIENT FLOORING, CARPET PAD, ETC.
5. ALL LIFE SAFETY DEVICES SHALL REMAIN ACTIVE DURING DEMOLITION AND CONSTRUCTION.

KEYNOTES

NO.	DESCRIPTION
1.51	REMOVE (E) BUILT UP ROOFING & (E) RIGID INSULATION. (E) PLYWOOD SHEATHING & (E) ROOF FRAMING TO REMAIN, PROTECT IN PLACE. GC TO INSPECT ROOF AND INFORM ARCHITECT OF ANY PLYWOOD THAT IS DAMAGED. REPLACE AS REQUIRED
1.52	REMOVE (E) WINDOW, PREP TO RECEIVE NEW WINDOW PER THE WINDOW SCHEDULE
1.53	REMOVE (E) LOUVERS, PREP TO RECEIVE NEW LOUVERS PER WINDOW SCHEDULE
1.54	REMOVE (E) COILING DOOR AND ITS HOUSING & METAL PLATE COVER, INFILL WITH NEW TEXTURED / PAINTED PLASTER & PLYWOOD SHEATHING & FRAMING TO MATCH ADJACENT SURFACES
1.55	REMOVE (E) DOOR, PREP TO RECEIVE NEW DOORS
1.56	REMOVE (E) LIGHTS. SEE ELECTRICAL PLANS
1.57	POWERWASH AND PATCH/REPAIR DAMAGED PLASTER TO LIKE-NEW CONDITION THAT MATCHES ADJACENT SURFACES. PREP TO RECEIVE NEW TEXTURE AND PAINT
1.58	(E) STRUCTURAL POST TO REMAIN. PROTECT IN PLACE
1.59	REMOVE (E) LOUVERS ABOVE DOOR, PREP TO RECEIVE NEW LOUVERS PER WINDOW SCHEDULE
1.60	SAND & CLEAN, SEAL CRACKS & REPAIR/REPLACE DAMAGED (E) ROOF FRAMING AND PREP TO RECEIVE NEW PAINTING
1.61	DEMO PORTION OF WALL FOR NEW PRESSURE RELIEF LOUVER PER MECHANICAL PLANS

ANNOTATIONS AND DEFINITIONS

D - DENOTES DEMOLITION
E - DENOTES EXISTING TO REMAIN
R - DENOTES RELOCATED

APPROVAL

CITY APPROVED BY:

DIRECTOR OF PUBLIC WORKS DATE

CITY REVIEWED BY:

SENIOR ENGINEER DATE

SUBMITTED BY:

DATE

CLIENT

LANCASTER
Creating a better tomorrow. Together.

CITY OF LANCASTER

44933 FERN AVENUE
LANCASTER, CA 93534

PROJECT NAME

SAMARITAN'S PURSE PARK FORMERLY KNOWN AS EL DORADO PARK RENOVATION

PWCP NO. 24-008

44501 5TH ST EAST
LANCASTER, CA 93535

ENGINEER/ARCHITECT

IDS

IDS GROUP

1 PETERS CANYON ROAD, SUITE 130
IRVINE, CA. 92606
TEL: 949-387-8500, FAX: 949-387-0800

STAMP

REGISTERED ARCHITECT
JOSEPH SHEFFIELD
No. C-5573
REN. 7-31-25
STATE OF CALIFORNIA

ISSUE

REV.	DESCRIPTION	DATE
	30% CD SET	12/15/23
	60% CD SET	01/12/24
	90% CD SET	02/26/24
1	CLIENT REVISIONS	04/26/24
2	BID SET	09/10/24
3	BULLETIN #1	10/25/24
4	BULLETIN #1 R1	2/14/25
	COMPOSITE SET	9/24/25

PROJECT IDENTIFICATION

THIS DRAWING WAS CREATED IN REVIT V. 2020 UNLESS OTHERWISE NOTED.

THE ORIGINAL SIZE OF THIS SHEET IS 30" X 42"

THESE DRAWINGS AND SPECIFICATIONS ARE THE PROPERTY AND COPYRIGHT OF IDS GROUP AND SHALL NOT BE USED ON ANY OTHER PROJECT OR LOCATIONS EXCEPT AS DESCRIBED ON THE DRAWINGS, WITHOUT THE WRITTEN AGREEMENT WITH IDS GROUP.

IDS PROJECT NO.	22X099.03
IDS DRAWN BY	MJ
IDS CHECKED BY	MM
IDS APPROVED BY	JS

SHEET TITLE

(E) COMMUNITY CENTER - DEMOLITION EXT. ELEVATIONS

SHEET NUMBER

A-114

IDS GROUP - FILE LOCATION: C:\Users\matias.javaherian\Documents\22X099.01 LANC - EL DORADO PARK (E) COMMUNITY CENTER RENOVATION_ARCH_MY72DZ_matias.javaherian@IDSGP.AR
PLOT DATE: 10/29/2024 4:31:54 PM
USER: Author

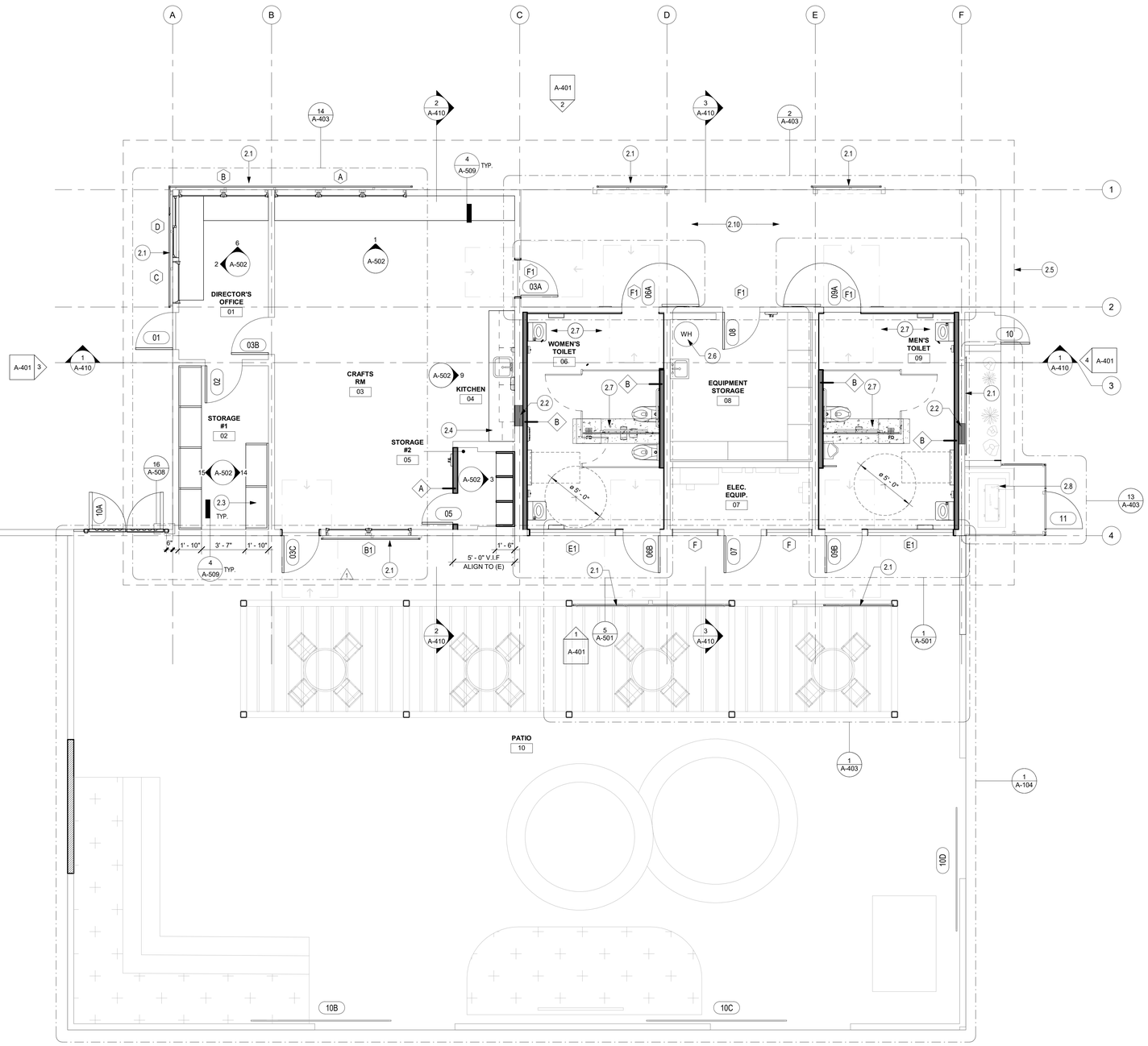

GENERAL NOTES

1. SEE G-SHEET SERIES FOR ADDITIONAL NOTES AND ABBREVIATIONS.
2. PARTITIONS DIMENSIONED TO FINISH FACE U.O.N. DO NOT ADJUST DIMENSIONS INDICATED AS "CLEAR" WITHOUT WRITTEN DIRECTION FROM ARCHITECT. DRAWINGS SHALL NOT BE SCALED. VERIFY ALL DIMENSIONS AND EXISTING AS BUILT FIELD CONDITIONS, INCLUDING FIELD MEASUREMENTS PRIOR TO START OF WORK, NOTIFY ARCHITECT WHERE DISCREPANCIES OCCUR.
3. USE TYPE "X" GWB ON FIRE RATED PARTITIONS.
4. USE CEMENTITIOUS BACKER BOARD (DUROCK) OR EQUAL AT PARTITIONS SCHEDULED TO RECEIVE CERAMIC TILE (U.O.N.). SEE FINISH PLAN FOR LOCATION OF TILE.
5. WHERE FURRED PARTITIONS EXCEED MAXIMUM HEIGHT, BRACE TO ADJACENT STRUCTURE.
6. FIRE SAFE PENETRATIONS AT FIRE RESISTANT RATED PARTITIONS PER APPLICABLE UL ASSEMBLY. SEE A7 SHEET SERIES FOR DETAILS.
7. MAINTAIN INTEGRITY OF EXISTING FIRE RESISTANT RATED ASSEMBLIES FOR ALL PENETRATIONS.
8. PROVIDE BLOCKING AS REQUIRED AT LOCATIONS INCLUDING, BUT NOT LIMITED TO: GRAB BARS, SHELVING, OVERHEAD CABINETS, SIGNAGE, TOILET ROOM ACCESSORIES, WALL MOUNT. EQUIPMENT, ETC.
9. PROVIDE LEVEL 4 FINISH U.O.N. PROVIDE LEVEL 5 FINISH AT ALL PARTITIONS TO RECEIVE WALL COVERING. REFER TO FINISH PLANS FOR LOCATIONS AND ADDITIONAL INFORMATION.
10. LARGE SCALE DRAWINGS TAKE PRECEDENCE OVER SMALL SCALE DRAWINGS. DETAILS TAKE PRECEDENCE OVERALL. NOTIFY ARCHITECT IN WRITING WHERE DISCREPANCIES OCCUR.
11. ALL EXPOSED OUTSIDE GYPSUM BOARD CORNERS SHALL HAVE A CONTINUOUS METAL CORNER BEAD.
12. DIMENSIONS TAKEN FROM PERIMETER EXTERIOR WINDOW WALL ARE TAKEN FROM THE INSIDE FACE OF THE VERTICAL MULLION. DIMENSIONS MARKED VERIFY IN FIELD, SHALL BE VERIFIED PRIOR TO START OF WORK UNLESS OTHERWISE NOTED.
13. CONTRACTOR SHALL COORDINATE WORK WITH HVAC, MECHANICAL, ELECTRICAL, PLUMBING, DESIGN BUILD FIRE PROTECTION AND STRUCTURAL DRAWINGS AND REPORT TO THE ARCHITECT DISCREPANCIES FOR CORRECTION AND ADJUSTMENT PRIOR TO START OF WORK. NO ALLOWANCE WILL BE MADE FOR INCREASED COST DUE TO THE CONTRACTOR'S LACK OF COORDINATION.
14. PATCH FLOOR AND WALL AREAS DAMAGED DUE TO NEW CONSTRUCTION OR WHERE PENETRATIONS HAVE BEEN MADE FOR MECHANICAL, ELECTRICAL AND PLUMBING WORK. FIRESAFE AT UL RATED ASSEMBLIES CONSISTENT WITH EXISTING UL RATING.
15. WHERE EXISTING RATED ASSEMBLIES ARE SHOWN, CONTRACTOR IS REQUESTED TO FIELD VERIFY AS BUILT FIELD CONDITIONS TO CONFIRM RATINGS SHOWN. IF NON-COMPLIANT CONDITIONS ARE FOUND, DEMO AND REPLACE WITH NEW EQUIVALENT UL ASSEMBLY, OR REPORT FINDINGS TO OWNER/ARCHITECT IN WRITING WHO WILL PROVIDE WRITTEN DIRECTION.
16. PATCH AND REPAIR ALL EXISTING PARTITIONS AFTER DEMOLITION WHERE DAMAGE HAS OCCURRED AT UNPROTECTED LOCATIONS. PLEASE NOTE THAT DEMOLITION ACTIVITY MAY OCCUR BEYOND WORK LIMITS SHOWN ON DEMOLITION PLAN DUE TO CONCEALED CONDITIONS.
17. ALL LIGHT GAUGE COLD FORMED METAL FRAMING SHALL MEET OR EXCEED PROPERTIES SPECIFIED FOR THE CORRESPONDING MEMBER SIZE IN STEEL MANUFACTURERS ASSOCIATION [SSMA] PRODUCT TECHNICAL INFORMATION [ICC-ES REPORT NO. ER-4943P] AND SHALL COMPLY WITH APPLICABLE AMERICAN SOCIETY FOR TESTING AND MATERIALS, AMERICAN IRON AND STEEL INSTITUTE S100 AND SPECIFIED TRUE GAUGE FLAT STEEL MIL THICKNESS THAT ONLY TRUE GAUGE FLAT STEEL CAN SATISFY. USE OF "EFFECTIVE THICKNESS" COLD REDUCED AFTERMARKET EQUIVALENT PRODUCT (EQ) STUDS FURNISHED BY EQ STUD MANUFACTURERS, VENDORS OR SUPPLIERS ARE NOT PERMITTED WITHOUT EXCEPTION.
18. REQUIRED MARKING AND IDENTIFICATION OF PARTITIONS. WHERE THERE IS AN ACCESSIBLE CONCEALED FLOOR, FLOOR-CEILING OR ATTIC SPACE, FIRE WALLS, FIRE BARRIERS, FIRE PARTITIONS, SMOKE BARRIERS AND SMOKE PARTITIONS OR ANY OTHER WALL REQUIRED TO HAVE PROTECTED OPENINGS OR PENETRATIONS SHALL BE EFFECTIVELY AND PERMANENTLY IDENTIFIED WITH SIGNS OR STENCILING IN THE CONCEALED SPACE. SUCH IDENTIFICATION SHALL BE LOCATED WITHIN 15 FEET (4572 MM) OF THE END OF EACH WALL AND AT INTERVALS NOT EXCEEDING 30 FEET (9144 MM) MEASURED HORIZONTALLY ALONG THE WALL OR PARTITION AND INCLUDE LETTERING NOT LESS THAN 3 INCHES (76 MM) IN HEIGHT WITH A MINIMUM 3/8-INCH (9.5 MM) STROKE IN A CONTRASTING COLOR INCORPORATING THE SUGGESTED WORDING, "FIRE AND/OR SMOKE BARRIER — PROTECT ALL OPENINGS," OR OTHER WORDING BASED ON LOCAL JURISDICTION. REFER TO PARTITION SCHEDULE, PLAN AND LEGEND TO IDENTIFY APPLICABLE PARTITIONS.

KEYNOTES

NO.	DESCRIPTION
2.1	(N) PERFORATED METAL SCREENS, SEE ELEVATION
2.2	INFILL THE WALL TO MATCH EXISTING FRAMING AND FINISH, SEE DETAIL 11/A-734
2.3	(N) STORAGE SHELVES
2.4	UNDERCOUNTER REFRIGERATOR
2.5	ROOF ABOVE
2.6	(N) WATER HEATER - SEE PLUMBING PLANS
2.7	PATCH AND REPAIR THE (E) CONCRETE SLAB AS REQUIRED, PREP TO RECEIVE NEW FLOOR FINISHES 2.0
2.8	(N) GROUND-MOUNTED MECHANICAL EQUIPMENT WITH PERFORATED METAL PANEL ENCLOSURE AND GATE
2.10	(N) CONCRETE SLAB, SEE DETAIL 4/A-509. SEE CIVIL PLANS

WALL TYPES

A	WALL PARTITION - 5/8" TYPE "X" GYP. BD BOTH SIDES) OVER 2X4 WOOD STUD FRAMING TO UNDERSIDE OF ROOF AT 24" O.C. SEE DETAIL 1/A-901
B	WALL FURRING - 5/8" TYPE "X" GYP. BD (INTERIOR SIDE) OVER 2X4 WOOD STUD FRAMING TO UNDERSIDE OF ROOF AT 24" O.C. SEE DETAIL 3/A-901

NOTE:
1. USE MOISTURE & MOLD RESISTANT GYPSUM BOARD ON WET WALLS (8'-0" HIGH MINIMUM)

PLAN LEGEND

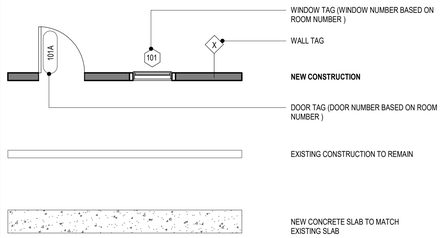

ANNOTATIONS AND DEFINITIONS

N - DENOTES NEW
E - DENOTES EXISTING TO REMAIN
R - DENOTES RELOCATED

FLOOR PLAN | 1/4" = 1'-0" | 1

APPROVAL

CITY APPROVED BY:

DIRECTOR OF PUBLIC WORKS — DATE

CITY REVIEWED BY:

SENIOR ENGINEER — DATE

SUBMITTED BY:

DATE

CLIENT

LANCASTER
Creating a better tomorrow. Together.

CITY OF LANCASTER

44933 FERN AVENUE
LANCASTER, CA 93534

PROJECT NAME

SAMARITAN'S PURSE PARK FORMERLY KNOWN AS EL DORADO PARK RENOVATION

PWCP NO. 24-008

44501 5TH ST EAST
LANCASTER, CA 93535

ENGINEER/ARCHITECT

IDS

IDS GROUP

1 PETERS CANYON ROAD, SUITE 130
IRVINE, CA 92606
TEL: 949-387-8500, FAX: 949-387-0800

STAMP

REGISTERED ARCHITECT — JOSEPH SIEGEL — No. C-15573 — REN. 7-31-25 — STATE OF CALIFORNIA

ISSUE

REV.	DESCRIPTION	DATE
	30% CD SET	12/15/23
	60% CD SET	01/12/24
	90% CD SET	02/26/24
1	CLIENT REVISIONS	04/26/24
2	BID SET	09/10/24
3	BULLETIN #1	10/25/24
4	BULLETIN #1 R1	2/14/25
	COMPOSITE SET	9/24/25

PROJECT IDENTIFICATION

THIS DRAWING WAS CREATED IN REVIT V. 2020 UNLESS OTHERWISE NOTED.

THE ORIGINAL SIZE OF THIS SHEET IS 30" X 42"

THESE DRAWINGS AND SPECIFICATIONS ARE THE PROPERTY AND COPYRIGHT OF IDS GROUP AND SHALL NOT BE USED ON ANY OTHER PROJECT OR LOCATIONS EXCEPT AS DESCRIBED ON THE DRAWINGS, WITHOUT THE WRITTEN AGREEMENT WITH IDS GROUP

IDS PROJECT NO.	22X099.03
IDS DRAWN BY	MJ
IDS CHECKED BY	MM
IDS APPROVED BY	JS

SHEET TITLE

(E) COMMUNITY CENTER - PROPOSED FLOOR PLAN

SHEET NUMBER

A-201

IDS GROUP - FILE LOCATION: C:\Users\matthew.javaherian\Documents\22X099.01 LANC - El DORADO PARK (E) COMMUNITY CENTER RENOVATION_ARCH_MY2022_matthew.javaherian.rvt
USER: Author
PLOT DATE: 10/29/2024 4:31:57 PM

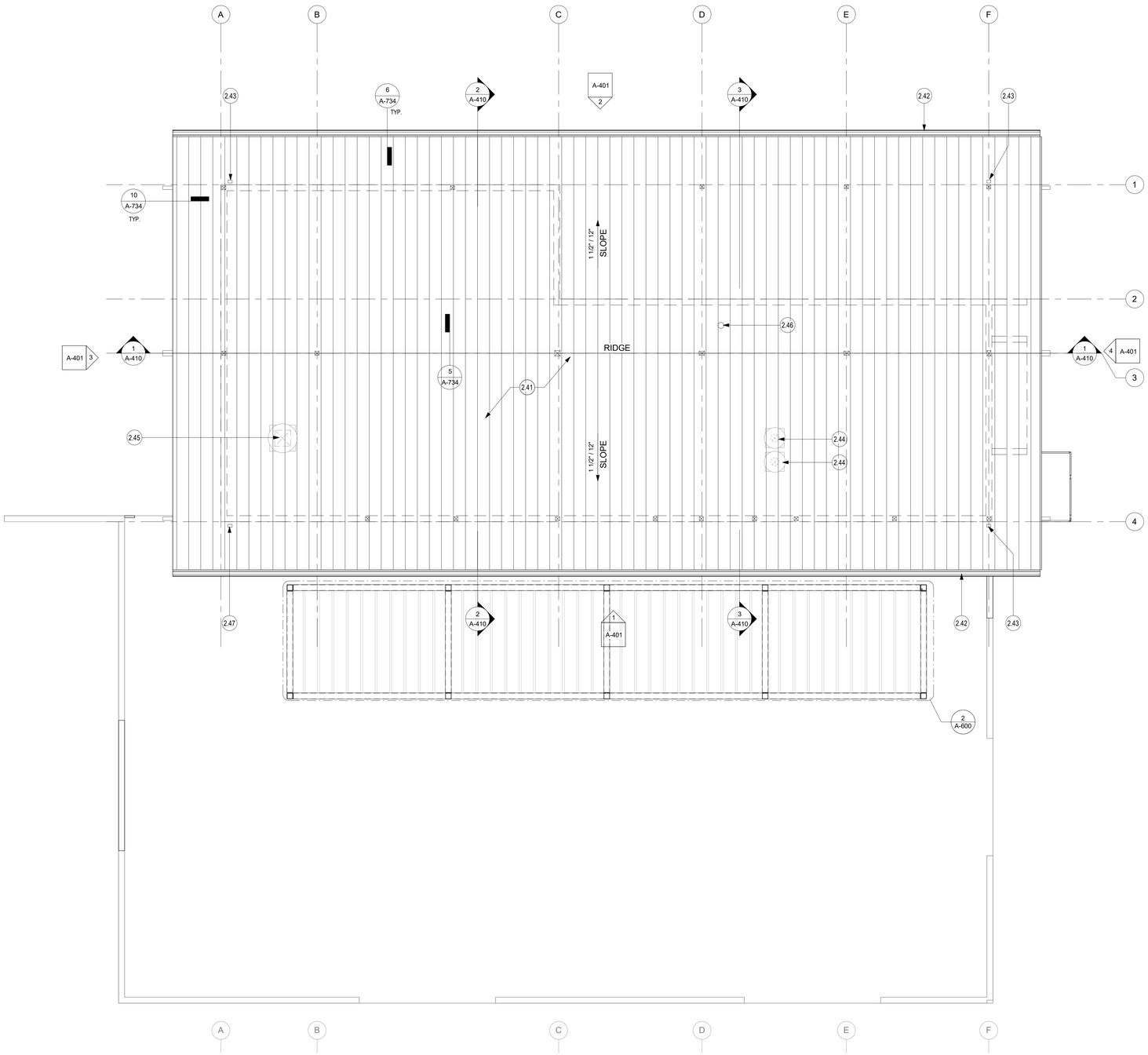

GENERAL NOTES

1. SEE G-001 FOR ABBREVIATIONS, SYMBOLS AND ADDITIONAL NOTES.

2. MAINTAIN EXISTING UL RATED ROOF DIAPHRAGM ASSEMBLY FOR ALL NEW WORK INCLUDING BUT NOT LIMITED TO PENETRATIONS AND SUPPORTS FOR PIPES, CONDUIT, DUCTWORK, EQUIPMENT SUPPORT AND WATERPROOFING / FLASHING ASSEMBLIES.

3. MAINTAIN POSITIVE DRAINAGE TO EXISTING ROOF DRAIN AND OVERFLOW DRAIN LOCATIONS. WHERE NEW WORK CONFLICTS WITH EXISTING DRAINAGE FLOW, PROVIDE CRICKETS AROUND OBSTRUCTIONS COMPATIBLE WITH EXISTING ROOF MEMBRANE ASSEMBLY AND SHEET METAL AND AIR CONDITIONING CONTRACTORS NATIONAL ASSOCIATION [SMACNA] STANDARDS FOR FLASHING FABRICATION AND ASSEMBLY. CRICKETS SHALL SLOPE ¼" / FOOT MIN.

4. DOCUMENT, COORDINATE AND SUBMIT FOR REVIEW NEW WORK INCLUDING BUT NOT LIMITED TO EQUIPMENT SUPPORTS, EQUIPMENT CLEARANCES FOR OPERATION AND MAINTENANCE, ROOF SCREEN SUPPORTS, SATELLITE DISH AND CELL TOWER SUPPORTS, AND UTILITY ROUGH-INS WHERE OCCUR PRIOR TO START OF WORK. PROVIDE 1/4" / FOOT MIN. SLOPE AT NEW CRICKET LOCATIONS TO FACILITATE POSITIVE DRAINAGE AROUND NEW EQUIPMENT PADS AND ROOF MOUNTED WORK.

5. UPTURN ROOF MEMBRANES WHERE REQUIRED BY NEW WORK 8" MIN.

6. PROVIDE OVERFLOW DRAINS 2" ABOVE ROOF DRAINS.

8. NEW ROOFING ASSEMBLY SHALL COMPLY WITH UL CLASS A FIRE RESISTIVE RATING.

9. DIMENSIONS SHOWN ARE FOR COORDINATION PURPOSES ONLY. SEE ENGINEERING DRAWINGS FOR ROOF PENETRATION ROUGH OPENING DIMENSIONS, EDGE OF DECK DIMENSIONS AND NEW FRAMING AROUND NEW ROOF PENETRATIONS WHERE OCCUR.

10. WHERE EXISTING CONDITIONS ARE DOCUMENTED, THEY ARE PROVIDED FOR THE PURPOSE OF COORDINATION ONLY AND DO NOT INCLUDE CONCEALED CONDITIONS OR EXISTING NON-COMPLIANT WORK.

11. WHERE EXISTING ROOF ASSEMBLY IS SHOWN TO REMAIN, OR BE MODIFIED, PROVIDE CUT / PATCH AND REPAIR WITH MATERIALS COMPATIBLE WITH EXISTING ASSEMBLY - SMACNA. INCLUDE CUT / PATCH WORK IN WARRANTY FOR NEW WORK. MAINTAIN EXISTING UL RATING.

12. WHERE EXISTING MECHANICAL EQUIPMENT IS SHOWN TO BE REMOVED, PATCH AND REPAIR ROOFING MEMBRANE WITH NEW, COMPATIBLE MATERIALS TO MATCH EXISTING. MATCH EXISTING UL RATING. DIMENSIONS ARE SHOWN FOR COORDINATION PURPOSES ONLY. SEE ENGINEERING DRAWINGS FOR ROOF PENETRATION ROUGH OPENING DIMENSIONS, EDGE OF DECK DIMENSIONS AND NEW FRAMING AROUND NEW ROOF PENETRATIONS WHERE OCCUR. VERIFY DIMENSIONS PRIOR TO START OF WORK, NOTIFY OWNER/ARCHITECT IN WRITING WHERE CONFLICTS OCCUR PRIOR TO START OF WORK.

13.CONTRACTOR SHALL VERIFY SIZES AND LOCATIONS OF MECHANICAL/ROOF MOUNTED EQUIPMENT PLATFORMS, HOUSEKEEPING PADS, DRAIN LOCATIONS, POWER FEEDS, SEISMIC RESTRAINT AND INSTALLATION REQUIREMENTS WITH EQUIPMENT MANUFACTURER'S PRIOR TO START OF WORK.

KEYNOTES

NO.	DESCRIPTION
2.41	(N) STANDING SEAM ROOFING BY MBCI OR APPROVED EQUAL. DOUBLE-LOK ROOF PANEL, COLOR: SLATE GRAY OVER WATERPROOFING MEMBRANE OVER (E) PLYWOOD SHEATHING OVER (E) ROOF FRAMING. INSTALL PER MANUFACTURER RECOMMENDATIONS
2.42	N) GALVANIZED METAL GUTTER BY SEAL-TITE OR APPROVED EQUAL. 6" K-STYLE, LT-GUTTER, COLOR: SLATE GRAY. SLOPE THE GUTTER TOWARDS THE DOWNSPOUTS
2.43	(N) GALVANIZED METAL DOWNSPOUT BY SEAL-TITE OR APPROVED EQUAL. 3"X4" CORRUGATED LT DOWNSPOUTS & ELBOWS, COLOR: SLATE GRAY
2.44	(N) EXHAUST FAN PER MECHANICAL PLANS
2.45	(N) INTAKE HOOD PER MECHANICAL PLANS
2.46	(N) WATER HEATER VENT PER PLUMBING PLANS
2.47	(N) GALVANIZED METAL DOWNSPOUT BY SEAL-TITE OR APPROVED EQUAL. 3"X4" CORRUGATED LT DOWNSPOUTS & ELBOWS, COLOR: SLATE GRAY. DRAIN ONTO THE CONCRETE PAVING

ROOF LEGEND

WALLS BELOW

ANNOTATIONS AND DEFINITIONS

D - DENOTES DEMOLITION
E - DENOTES EXISTING TO REMAIN
R - DENOTES RELOCATED

N

ROOF PLAN | 1/4" = 1'-0" | 1

APPROVAL

CITY APPROVED BY:

DIRECTOR OF PUBLIC WORKS DATE
CITY REVIEWED BY:

SENIOR ENGINEER DATE
SUBMITTED BY:

DATE

CLIENT

LANCASTER
Creating a better tomorrow. Together.

CITY OF LANCASTER

44933 FERN AVENUE
LANCASTER, CA 93534

PROJECT NAME

SAMARITAN'S PURSE PARK FORMERLY KNOWN AS EL DORADO PARK RENOVATION

PWCP NO. 24-008

44501 5TH ST EAST
LANCASTER, CA 93535

ENGINEER/ARCHITECT

IDS

IDS GROUP

1 PETERS CANYON ROAD, SUITE 130
IRVINE, CA. 92606
TEL: 949-387-8500, FAX: 949-387-0800

STAMP

REGISTERED ARCHITECT
JOSEPH SILBERG
No. 15573
REN. 7-31-25
STATE OF CALIFORNIA

ISSUE

REV.	DESCRIPTION	DATE
	30% CD SET	12/15/23
	60% CD SET	01/12/24
	90% CD SET	02/26/24
1	CLIENT REVISIONS	04/26/24
2	BID SET	09/10/24
3	BULLETIN #1	10/25/24
4	BULLETIN #1 R1	2/14/25
	COMPOSITE SET	9/24/25

PROJECT IDENTIFICATION

THIS DRAWING WAS CREATED IN REVIT V. 2020 UNLESS OTHERWISE NOTED.

THE ORIGINAL SIZE OF THIS SHEET IS 30" X 42"

THESE DRAWINGS AND SPECIFICATIONS ARE THE PROPERTY AND COPYRIGHT OF IDS GROUP AND SHALL NOT BE USED ON ANY OTHER PROJECT OR LOCATIONS EXCEPT AS DESCRIBED ON THE DRAWINGS, WITHOUT THE WRITTEN AGREEMENT WITH IDS GROUP.

IDS PROJECT NO.	22X099.03
IDS DRAWN BY	MJ
IDS CHECKED BY	MM
IDS APPROVED BY	JS

SHEET TITLE

(E) COMMUNITY CENTER - PROPOSED ROOF PLAN

SHEET NUMBER

A-202

IDS GROUP - FILE LOCATION: C:\Users\mariska.javelhelm\Documents\22X099.01 LANC - ELDORADO PARK (E) COMMUNITY CENTER RENOVATION_ARCH_R21_22X099_mariska.javelhelm.rvt
PLOT DATE: 10/29/2024 4:31:58 PM
USER: Author

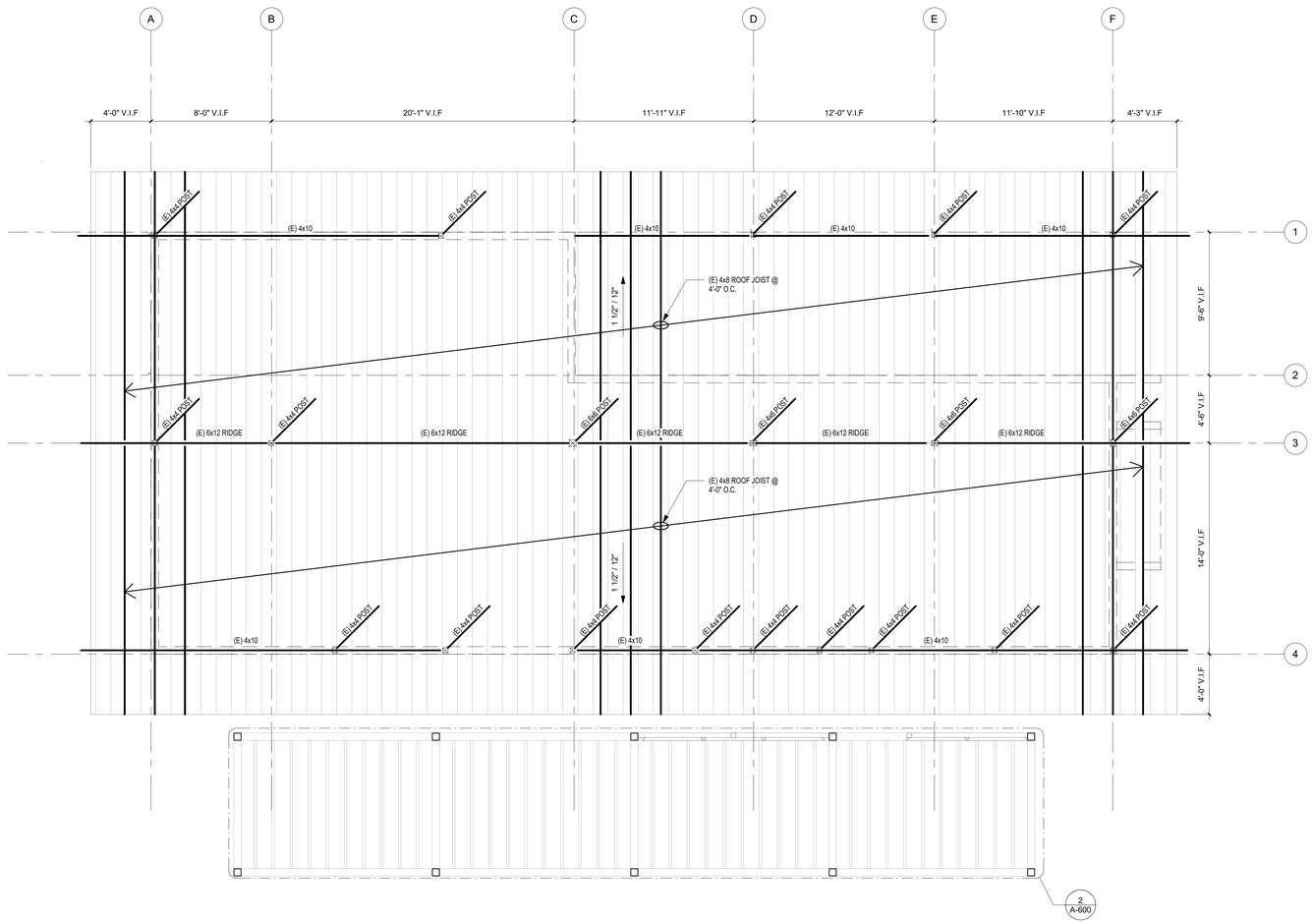

N

ROOF FRAMING PLAN | 1/4" = 1'-0" | 1

GENERAL NOTES

1. SEE G-001 FOR ABBREVIATIONS, SYMBOLS AND ADDITIONAL NOTES.

2. MAINTAIN EXISTING UL RATED ROOF DIAPHRAGM ASSEMBLY FOR ALL NEW WORK INCLUDING BUT NOT LIMITED TO PENETRATIONS AND SUPPORTS FOR PIPES, CONDUIT, DUCTWORK, EQUIPMENT SUPPORT AND WATERPROOFING / FLASHING ASSEMBLIES.

3. MAINTAIN POSITIVE DRAINAGE TO EXISTING ROOF DRAIN AND OVERFLOW DRAIN LOCATIONS. WHERE NEW WORK CONFLICTS WITH EXISTING DRAINAGE FLOW, PROVIDE CRICKETS AROUND OBSTRUCTIONS COMPATIBLE WITH EXISTING ROOF MEMBRANE ASSEMBLY AND SHEET METAL AND AIR CONDITIONING CONTRACTORS NATIONAL ASSOCIATION [SMACNA] STANDARDS FOR FLASHING FABRICATION AND ASSEMBLY. CRICKETS SHALL SLOPE ¼" / FOOT MIN.

4. DOCUMENT, COORDINATE AND SUBMIT FOR REVIEW NEW WORK INCLUDING BUT NOT LIMITED TO EQUIPMENT SUPPORTS, EQUIPMENT CLEARANCES FOR OPERATION AND MAINTENANCE, ROOF SCREEN SUPPORTS, SATELLITE DISH AND CELL TOWER SUPPORTS, AND UTILITY ROUGH-INS WHERE OCCUR PRIOR TO START OF WORK. PROVIDE 1/4" / FOOT MIN. SLOPE AT NEW CRICKET LOCATIONS TO FACILITATE POSITIVE DRAINAGE AROUND NEW EQUIPMENT PADS AND ROOF MOUNTED WORK.

5. UPTURN ROOF MEMBRANES WHERE REQUIRED BY NEW WORK 8" MIN.

6. PROVIDE OVERFLOW DRAINS 2" ABOVE ROOF DRAINS.

8. NEW ROOFING ASSEMBLY SHALL COMPLY WITH UL CLASS A FIRE RESISTIVE RATING.

9. DIMENSIONS SHOWN ARE FOR COORDINATION PURPOSES ONLY. SEE ENGINEERING DRAWINGS FOR ROOF PENETRATION ROUGH OPENING DIMENSIONS, EDGE OF DECK DIMENSIONS AND NEW FRAMING AROUND NEW ROOF PENETRATIONS WHERE OCCUR.

10. WHERE EXISTING CONDITIONS ARE DOCUMENTED, THEY ARE PROVIDED FOR THE PURPOSE OF COORDINATION ONLY AND DO NOT INCLUDE CONCEALED CONDITIONS OR EXISTING NON-COMPLIANT WORK.

11. WHERE EXISTING ROOF ASSEMBLY IS SHOWN TO REMAIN, OR BE MODIFIED, PROVIDE CUT / PATCH AND REPAIR WITH MATERIALS COMPATIBLE WITH EXISTING ASSEMBLY - SMACNA. INCLUDE CUT / PATCH WORK IN WARRANTY FOR NEW WORK. MAINTAIN EXISTING UL RATING.

12. WHERE EXISTING MECHANICAL EQUIPMENT IS SHOWN TO BE REMOVED, PATCH AND REPAIR ROOFING MEMBRANE WITH NEW, COMPATIBLE MATERIALS TO MATCH EXISTING. MATCH EXISTING UL RATING. DIMENSIONS ARE SHOWN FOR COORDINATION PURPOSES ONLY. SEE ENGINEERING DRAWINGS FOR ROOF PENETRATION ROUGH OPENING DIMENSIONS, EDGE OF DECK DIMENSIONS AND NEW FRAMING AROUND NEW ROOF PENETRATIONS WHERE OCCUR. VERIFY DIMENSIONS PRIOR TO START OF WORK, NOTIFY OWNER/ARCHITECT IN WRITING WHERE CONFLICTS OCCUR PRIOR TO START OF WORK.

13.CONTRACTOR SHALL VERIFY SIZES AND LOCATIONS OF MECHANICAL/ROOF MOUNTED EQUIPMENT PLATFORMS, HOUSEKEEPING PADS, DRAIN LOCATIONS, POWER FEEDS, SEISMIC RESTRAINT AND INSTALLATION REQUIREMENTS WITH EQUIPMENT MANUFACTURER'S PRIOR TO START OF WORK.

KEYNOTES

NO.	DESCRIPTION

ROOF LEGEND

WALLS BELOW

ANNOTATIONS AND DEFINITIONS

D - DENOTES DEMOLITION
E - DENOTES EXISTING TO REMAIN
R - DENOTES RELOCATED

APPROVAL

CITY APPROVED BY:

DIRECTOR OF PUBLIC WORKS DATE

CITY REVIEWED BY:

SENIOR ENGINEER DATE

SUBMITTED BY:

DATE

CLIENT

LANCASTER
Creating a better tomorrow. Together.

CITY OF LANCASTER

44933 FERN AVENUE
LANCASTER, CA 93534

PROJECT NAME

SAMARITAN'S PURSE PARK FORMERLY KNOWN AS EL DORADO PARK RENOVATION

PWCP NO. 24-008

44501 5TH ST EAST
LANCASTER, CA 93535

ENGINEER/ARCHITECT

IDS

IDS GROUP

1 PETERS CANYON ROAD, SUITE 130
IRVINE, CA. 92606
TEL: 949-387-8500, FAX: 949-387-0800

STAMP

LICENSED ARCHITECT
JOSEPH STIBRAL
No. C-15573
REN. 7-31-25
STATE OF CALIFORNIA

ISSUE

REV.	DESCRIPTION	DATE
	30% CD SET	12/15/23
	60% CD SET	01/12/24
	90% CD SET	02/26/24
1	CLIENT REVISIONS	04/26/24
2	BID SET	09/10/24
3	BULLETIN #1	10/25/24
4	BULLETIN #1 R1	2/14/25
	COMPOSITE SET	9/24/25

PROJECT IDENTIFICATION

THIS DRAWING WAS CREATED IN REVIT V. 2020 UNLESS OTHERWISE NOTED.

THE ORIGINAL SIZE OF THIS SHEET IS 30" X 42"

THESE DRAWINGS AND SPECIFICATIONS ARE THE PROPERTY AND COPYRIGHT OF IDS GROUP AND SHALL NOT BE USED ON ANY OTHER PROJECT OR LOCATIONS EXCEPT AS DESCRIBED ON THE DRAWINGS, WITHOUT THE WRITTEN AGREEMENT WITH IDS GROUP.

IDS PROJECT NO.	22X099.03
IDS DRAWN BY	MJ
IDS CHECKED BY	MM
IDS APPROVED BY	JS

SHEET TITLE

(E) COMMUNITY CENTER - ROOF FRAMING PLAN

SHEET NUMBER

A-203

IDS GROUP - FILE LOCATION: C:\Users\matias.jurado\Documents\22X099.01 LANC - El DORADO PARK (E) COMMUNITY CENTER RENOVATION_ARCH_CNTR22_matias.jurado.rvt
PLOT DATE: 10/29/2024 4:31:59 PM
USER: Author

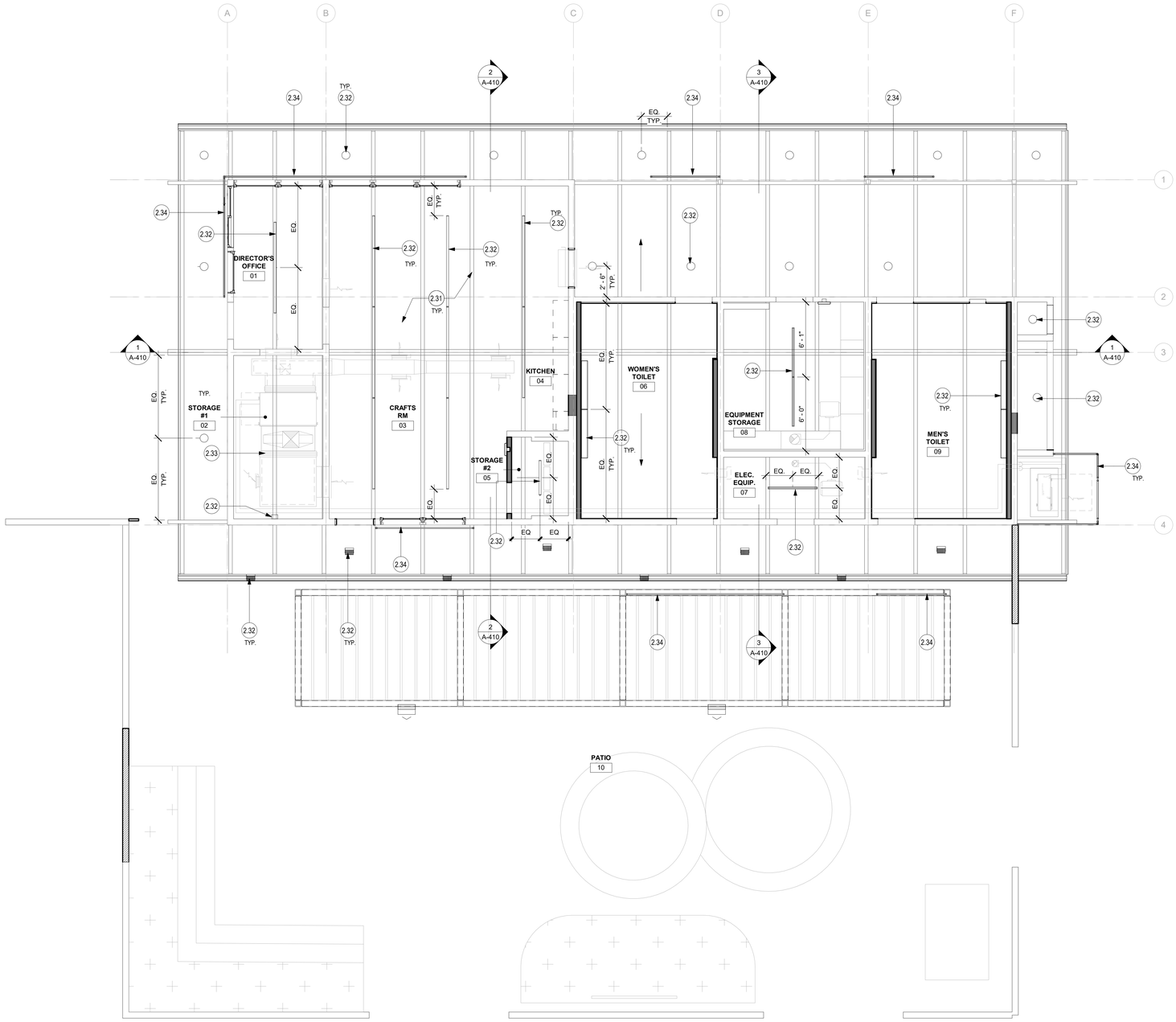

GENERAL NOTES

1. SEE G-SHEET SERIES FOR ADDITIONAL NOTES AND ABBREVIATIONS.
2. VERIFY AS-BUILT FIELD CONDITIONS AND LOCATIONS FOR EXISTING AND NEW PLUMBING, AUDIO VISUAL, HVAC DUCTWORK AND PIPING, STRUCTURAL FRAMING, ELECTRICAL BUS DUCT AND CONDUIT BANKS, ELECTRICAL PULL BOXES, FIRE PROTECTION LINES AND RELATED WORK TO DETERMINE AND COORDINATE BEST CEILING FRAMING, POINTS OF ACCESS AND CLEARANCES AS REQUIRED FOR NEW WORK.
3. PROVIDE ACCESS PANELS WHERE REQUIRED IN GYP.BD. CEILING INCLUDING, BUT NOT LIMITED TO FIRE SMOKE DAMPERS, FIRE LIFE SAFETY J-BOXES, FAN COILS AND VAV BOXES PER MANUFACTURER'S WRITTEN RECOMMENDATIONS, CONDUIT BANK PULL BOXES AND CONTROL AND SHUTOFF VALVES.
4. UNLESS OTHERWISE SHOWN PROVIDE FLUSH DRYWALL TYPE ACCESS PANELS W/ CONCEALED FRAME AT ALL NON RATED LOCATIONS.
5. ALL CEILING MOUNTED ELECTRICAL DEVICES SHALL BEAR UL LABEL AND FREE OF DEFECTS.
6. WHERE EXISTING ACOUSTICAL CEILING TILE IS SCHEDULED TO REMAIN, REPLACE DAMAGED ACOUSTICAL CEILING TILE WITH NEW TO MATCH EXISTING. IF PRODUCT IS NOT AVAILABLE FROM BUILDING INVENTORY ATTIC STOCK OR MANUFACTURER, NOTIFY ARCHITECT PRIOR TO START OF WORK.
7. LIGHTING CONTROL COVER PLATES SHALL BE WHITE AT GYP BD CEILINGS, SOFFITS AND CEILING MOUNTED FABRIC WRAPPED PANEL LOCATIONS, UNLESS NOTED OTHERWISE.
8. AT EXPOSED STRUCTURE AREAS IN STEEL BUILDINGS WITH EXPOSED SPRAY FIREPROOFING, PROVIDE PROTECTIVE OVERSPRAY AT SPRAY- FIREPROOFING TO PREVENT DUSTING WHERE PAINT IS SCHEDULED AT EXPOSED CONSTRUCTION PROVIDE PRIMER/SEALER UNDERCOAT PER MANUFACTURER'S WRITTEN RECOMMENDATIONS.
9. CONTRACTOR TO COORDINATE FIRE SPRINKLER AND FIRE ALARM DEVICE LOCATIONS WITH ARCHITECT PRIOR TO SUBMITTING FOR PERMIT. WHERE APPLICABLE CENTER SPRINKLER HEADS IN CEILING TIME. ALIGN SPEAKERS, SMOKE DETECTORS, MOTION SENSORS AND RELATED CEILING MOUNTED DEVICES WITH LIGHTING FIXTURE CENTERLINES AND CENTER OF CEILING TILE. LOCATE HVAC DIFFUSERS IN GYP BD CEILINGS AS SHOW ON ARCHITECTURAL R.C.P.
10. LOCATE EXIT SIGNS VERTICALLY ABOVE THE FINISH FLOOR TO INSURE SIGHT LINES ARE NOT BLOCKED BY LIGHT FIXTURES, BEAMS, SOFFITS, DROPPED CEILINGS, DUCTWORK, CONDUIT BANKS, PIPING AND RELATED OVERHEAD WORK.

KEYNOTES

NO.	DESCRIPTION
2.31	APPLY WHITE EPOXY PAINT, SPARTCOTE VERTICAL HB (OR EQUAL) TO UNDERSIDE OF ROOF AND EXPOSED STRUCTURE.
2.32	(N) LIGHT FIXTURES, SEE ELECTRICAL PLANS
2.33	(N) FAN COIL UNIT, SEE MECHANICAL PLANS
2.34	(N) PERFORATED METAL SCREEN, SEE SHEET A-402 FOR MORE INFORMATION

RCP LEGEND

(E) VAULTED PLYWOOD CEILING TO REMAIN

(N) LIGHT FIXTURE PER ELECTRICAL PLANS
BOTTOM OF PENDANT LIGHT FIXTURE @ 7'-0" A.F.F

(N) LIGHT FIXTURE PER ELECTRICAL PLANS

(N) LIGHT FIXTURE PER ELECTRICAL PLANS

(N) LIGHT FIXTURE PER ELECTRICAL PLANS

CEILING SLOPE

(N) LIGHT FIXTURE PER ELECTRICAL PLANS

ANNOTATIONS AND DEFINATIONS

D - DENOTES DEMOLITION
E - DENOTES EXISTING TO REMAIN
R - DENOTES RELOCATED

N

PROPOSED RCP | 1/4" = 1'-0" | 1

APPROVAL

CITY APPROVED BY:

DIRECTOR OF PUBLIC WORKS — DATE

CITY REVIEWED BY:

SENIOR ENGINEER — DATE

SUBMITTED BY:

DATE

CLIENT

LANCASTER
Creating a better tomorrow. Together.

CITY OF LANCASTER

44933 FERN AVENUE
LANCASTER, CA 93534

PROJECT NAME

SAMARITAN'S PURSE PARK FORMERLY KNOWN AS EL DORADO PARK RENOVATION

PWCP NO. 24-008

44501 5TH ST EAST
LANCASTER, CA 93535

ENGINEER/ARCHITECT

IDS

IDS GROUP

1 PETERS CANYON ROAD, SUITE 130
IRVINE, CA 92606
TEL: 949-387-8500, FAX: 949-387-0800

STAMP

REGISTERED PROFESSIONAL ENGINEER
REGISTERED ARCHITECT
No. C-15573
REN. 7-31-25
STATE OF CALIFORNIA

ISSUE

REV.	DESCRIPTION	DATE
	30% CD SET	12/15/23
	60% CD SET	01/12/24
	90% CD SET	02/26/24
1	CLIENT REVISIONS	04/26/24
2	BID SET	09/10/24
3	BULLETIN #1	10/25/24
4	BULLETIN #1 R1	2/14/25
	COMPOSITE SET	9/24/25

PROJECT IDENTIFICATION

THIS DRAWING WAS CREATED IN REVIT V. 2020 UNLESS OTHERWISE NOTED.

THE ORIGINAL SIZE OF THIS SHEET IS 30" X 42"

THESE DRAWINGS AND SPECIFICATIONS ARE THE PROPERTY AND COPYRIGHT OF IDS GROUP AND SHALL NOT BE USED ON ANY OTHER PROJECT OR LOCATIONS EXCEPT AS DESCRIBED ON THE DRAWINGS, WITHOUT THE WRITTEN AGREEMENT WITH IDS GROUP.

IDS PROJECT NO.	22X099.03
IDS DRAWN BY	MJ
IDS CHECKED BY	MM
IDS APPROVED BY	JS

SHEET TITLE

(E) COMMUNITY CENTER - PROPOSED RCP

SHEET NUMBER

A-210

ROOM & FINISH SCHEDULE

NUMBER	DESCRIPTION	AREA	FLOOR FINISH	FLOOR MATERIAL	BASE MATERIAL	BASE HEIGHT	CEILING HEIGHT	CEILING MATERIAL	CEILING FINISH	REMARKS
01	DIRECTOR'S OFFICE	96 SF	LVT-1	CONC.	CB-1	4"	VAULTED CEILING	(E) PLYWOOD	PT-1	
02	STORAGE #1	96 SF	LVT-1	CONC.	CB-1	4"	VAULTED CEILING	(E) PLYWOOD	PT-1	
03	CRAFTS RM	436 SF	LVT-1	CONC.	CB-1	4"	VAULTED CEILING	(E) PLYWOOD	PT-1	
04	KITCHEN	53 SF	LVT-1	CONC.	CB-1	4"	VAULTED CEILING	(E) PLYWOOD	PT-1	
05	STORAGE #2	27 SF	LVT-1	CONC.	CB-1	4"	VAULTED CEILING	(E) PLYWOOD	PT-1	
06	WOMEN'S TOILET	188 SF	FL-3	CONC.	CB-1	4"	VAULTED CEILING	(E) PLYWOOD	PT-1	
07	ELEC. EQUIP.	58 SF	-	CONC.			VAULTED CEILING	(E) PLYWOOD	-	
08	EQUIPMENT STORAGE	134 SF	-	CONC.			VAULTED CEILING	(E) PLYWOOD	-	
09	MEN'S TOILET	187 SF	FL-3	CONC.	CB-1	4"	VAULTED CEILING	(E) PLYWOOD	PT-1	
10	PATIO	2828 SF		CONC.						

SHEET NOTES

1. REFER TO THE FINISH SCHEDULE FOR FINISH DESIGNATION.
2. REFER TO THE FINISH PLANS FOR SPECIFIC FINISH DESIGNATION.
3. REFER TO THE INTERIOR ELEVATIONS ON SHEET A-402

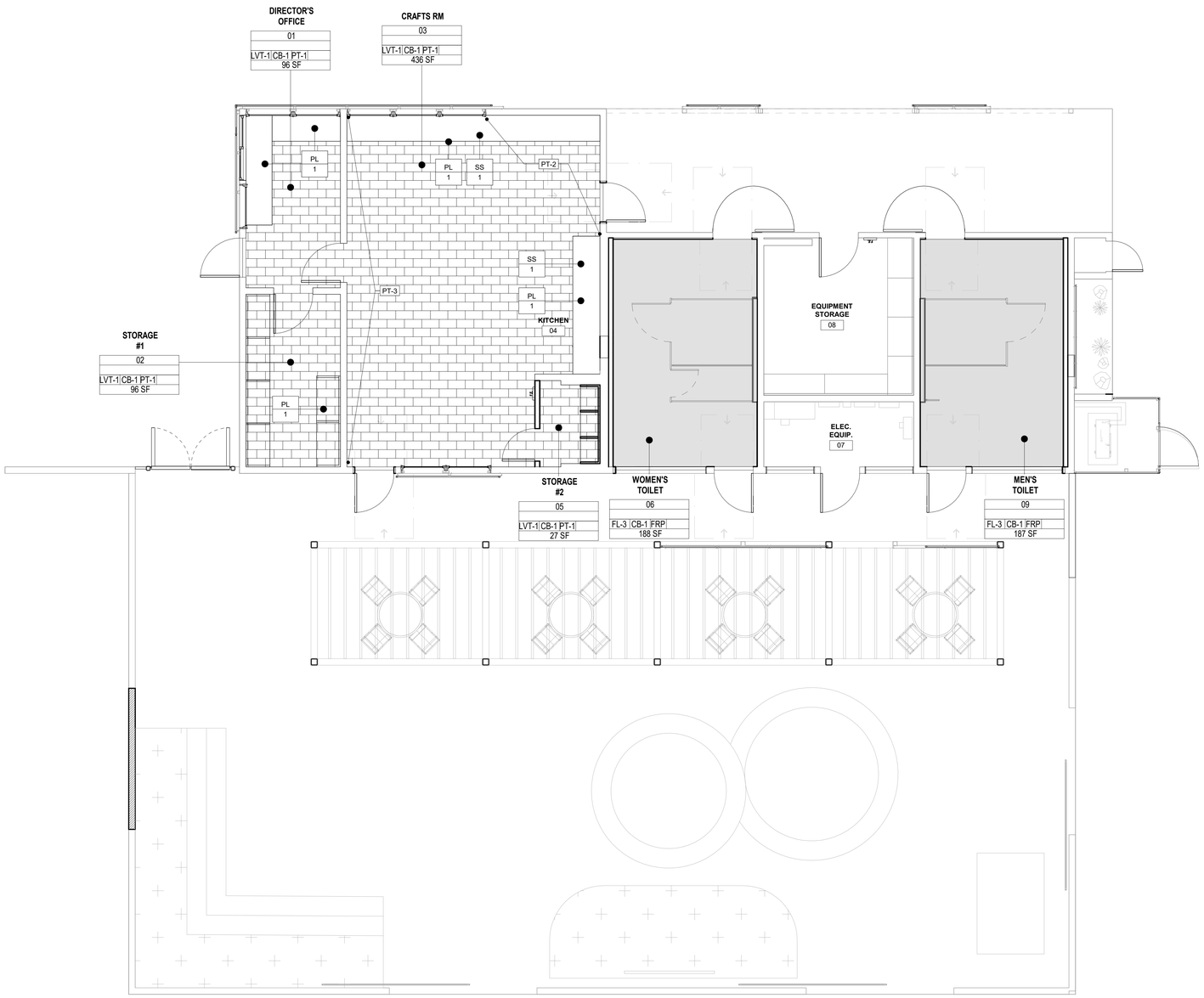

FINISH LEGEND

FINISHES TAG SYMBOL

OFFICE
CV-001
9'-0"
RF-1 | RB-1 | P-1 | GYP
996 SF

- ROOM NAME
- ROOM NUMBER
- CEILING HEIGHT
- ROOM FINISHES CODE
- ROOM AREA

PL
1

CASEWORK FINISHES TAG SYMBOL

LVT 1 - LUXURY VINYL TILE

SHAW FLOORS
RESIDE 6 MIL
HEARTH 94140

FL 2 - SEALED EXPOSED CONCRETE FINISH

GEM-CURE & SEAL 1315, 100 VOC
W/ POWDERED COLOR FOR CONCRETE,
CHAMOIS
WWW.BRICKFORM.COM
SKY READY MIX, INC. - LANCASTER, CA
661-547-6913

FL 3 - EPOXY FLOORING

DUR-A-FLEX -FARMINGTON CLAYSTONE

FINISH SCHEDULE

WALL FINISHES

PT- 1 GENERAL PAINT
DUNN EDWARDS PAINT WARM WHITE DEW380
FINISH: EGGSHELL/SEMI-GLOSS

PT- 2 ACCENT PAINT
DUNN EDWARDS PAINT WATSON LAKE DE5766
FINISH: EGGSHELL/SEMI-GLOSS

PT- 3 ACCENT PAINT
DUNN EDWARDS PAINT SNUG COTTAGE DEW330
FINISH: EGGSHELL/SEMI-GLOSS

FRP-1 PANOLAM SURFACE SYSTEMS, SKY FRP
WITH COLOR MATCHED TRIMS 1

DOORS FINISHES

PT- 4 EXTERIOR DOORS & FRAMES
DUNN EDWARDS PAINT MARENGO DEGR54
FINISH: EGGSHELL/SEMI-GLOSS

WV-1 INTERIOR DOORS & FRAMES
WILSONART - STANDARD LAMINATE - BEIGEWOOD 7850-60 MATTE FINISH

RESTROOM PARTITIONS

STAINLESS STEEL SATIN PARTITIONS BY BRADLEY OR APPROVED EQUAL. FLOOR MOUNTED . OVERHEAD BRACED.

SINKS

STAINLESS STEEL SATIN .

WALL BASE FINISHES
CB-1 MOHAWK GROUP - 4" COVED RUBBER WALL BASE - CHARCOAL

COUNTER SURFACE FINISHES
SS-1 FORMICA SOLID SURFACE - 601 BLEACHED CONCRETE W/ 6" BACKSPLASH TRIM PIECE

MILLWORK SURFACE FINISHES
PL-1 WILSONART STANDARD HIGH PRESSURE LAMINATE - VERANDA TEAK 8209K-28 GLOSS LINE FINISH

FINISH FLOOR PLAN & SCHEDULE - COMMUNITY CENTER | 1/4" = 1'-0" | 1

APPROVAL

CITY APPROVED BY:
DIRECTOR OF PUBLIC WORKS DATE
CITY REVIEWED BY:
SENIOR ENGINEER DATE
SUBMITTED BY:
DATE

CLIENT

LANCASTER
Creating a better tomorrow. Together.

CITY OF LANCASTER

44933 FERN AVENUE
LANCASTER, CA 93534

PROJECT NAME

SAMARITAN'S PURSE PARK FORMERLY KNOWN AS EL DORADO PARK RENOVATION

PWCP NO. 24-008

44501 5TH ST EAST
LANCASTER, CA 93535

ENGINEER/ARCHITECT

IDS

IDS GROUP

1 PETERS CANYON ROAD, SUITE 130
IRVINE, CA 92606
TEL: 949-387-8500, FAX: 949-387-0800

STAMP

REGISTERED ARCHITECT JOSEPH SILBER No. C-15573 REN. 7-31-25 STATE OF CALIFORNIA

ISSUE

REV.	DESCRIPTION	DATE
	30% CD SET	12/15/23
	60% CD SET	01/12/24
	90% CD SET	02/26/24
1	CLIENT REVISIONS	04/26/24
2	BID SET	09/10/24
3	BULLETIN #1	10/25/24
4	BULLETIN #1 R1	2/14/25
	COMPOSITE SET	9/24/25

PROJECT IDENTIFICATION

THIS DRAWING WAS CREATED IN REVIT V. 2020 UNLESS OTHERWISE NOTED.

THE ORIGINAL SIZE OF THIS SHEET IS 30" X 42"

THESE DRAWINGS AND SPECIFICATIONS ARE THE PROPERTY AND COPYRIGHT OF IDS GROUP AND SHALL NOT BE USED ON ANY OTHER PROJECT OR LOCATIONS EXCEPT AS DESCRIBED ON THE DRAWINGS, WITHOUT THE WRITTEN AGREEMENT WITH IDS GROUP.

IDS PROJECT NO.	22X099.03
IDS DRAWN BY	MJ
IDS CHECKED BY	MM
IDS APPROVED BY	JS

SHEET TITLE

(E) COMMUNITY CENTER - PROPOSED FINISH PLAN & SCHEDULE

SHEET NUMBER

A-220

IDS GROUP - FILE LOCATION: C:\Users\mwilks\Jewalterian\Documents\22X099.01 LANC - El DORADO PARK (E) COMMUNITY CENTER RENOVATION_ANY2_WTD22_mwilks.jewalterian@IDSGY.rvt
PLOT DATE: 10/29/2024 4:32:03 PM
USER: Author

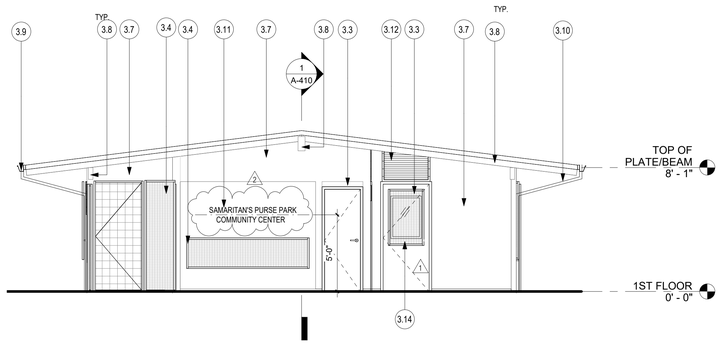

PROPOSED EAST ELEVATION | 1/4" = 1'-0" | 4

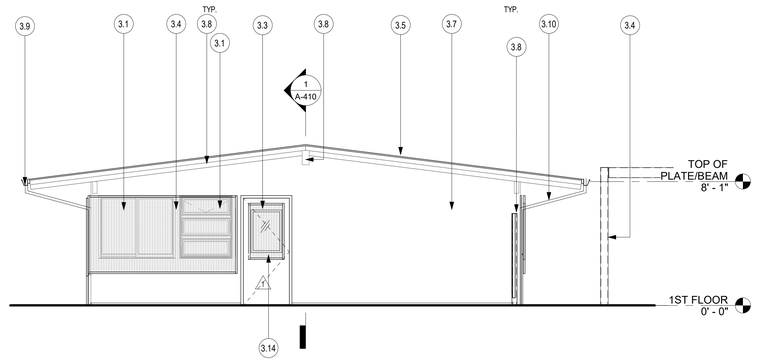

PROPOSED WEST ELEVATION | 1/4" = 1'-0" | 3

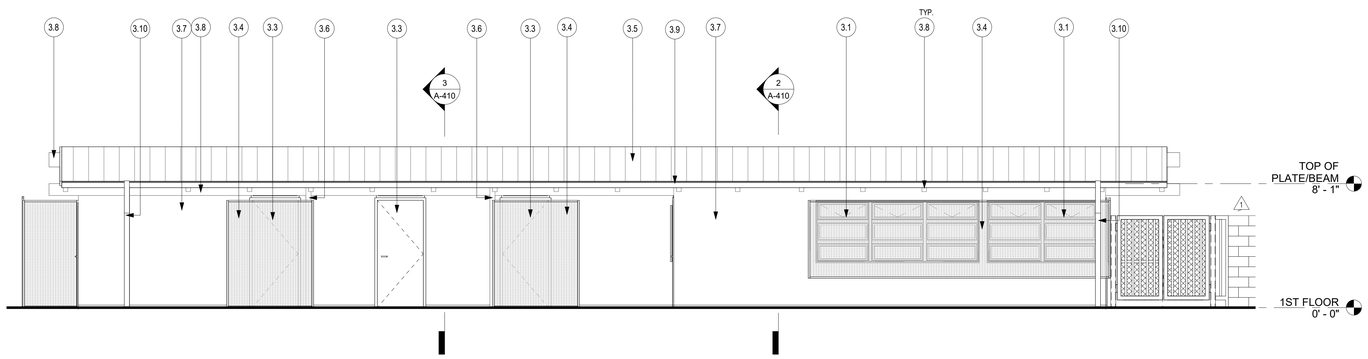

PROPOSED NORTH ELEVATION | 1/4" = 1'-0" | 2

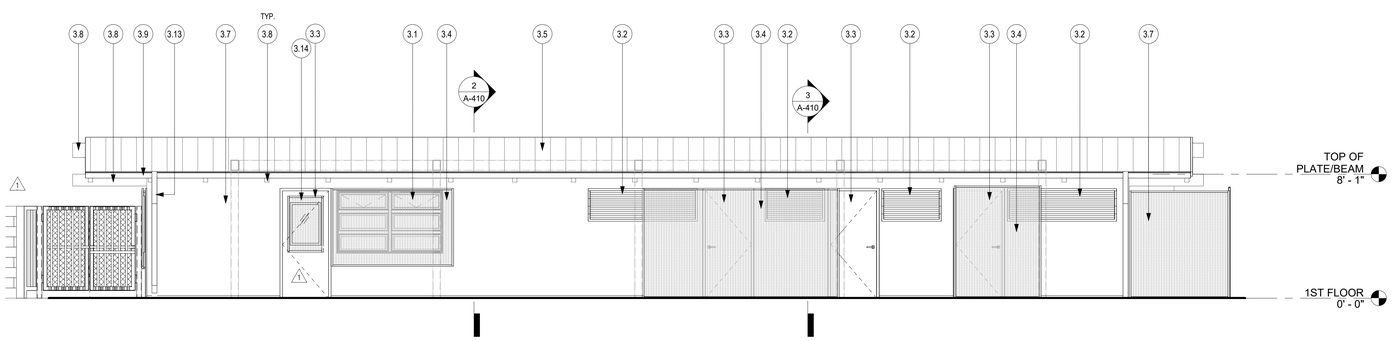

PROPOSED SOUTH ELEVATION | 1/4" = 1'-0" | 1

GENERAL NOTES

1. SEE G-001 SHEET FOR ADDITIONAL NOTES AND ABBREVIATIONS.
2. ALL EXISTING WORK TO REMAIN UNLESS OTHERWISE NOTED.
3. PROTECT WORK AREA INCLUDING NEW AND EXISTING MATERIALS AND FINISHES FROM DAMAGE WHICH MAY OCCUR FROM CONSTRUCTION, DEMOLITION, DUST, WATER, ETC. PROVIDE AND MAINTAIN TEMPORARY BARRICADES, CLOSURE WALLS, AS REQUIRED TO PROTECT THE PUBLIC AND BUILDING OCCUPANTS DURING CONSTRUCTION. DAMAGE TO NEW AND EXISTING STRUCTURES, EQUIPMENT, MATERIALS AND FINISHES SHALL BE REPAIRED OR REPLACED TO THE SATISFACTION OF THE OWNER AT THE SOLE EXPENSE OF THE CONTRACTOR.
4. REMOVE ALL EXISTING MATERIALS CREATING UNEVEN, OUT OF TOLERANCE SUBSTRATE INCLUDING BUT NOT LIMITED TO FASTENERS, COVER PLATES, RESILIENT FLOORING, CARPET PAD, ETC.
5. ALL LIFE SAFETY DEVICES SHALL REMAIN ACTIVE DURING DEMOLITION AND CONSTRUCTION.

KEYNOTES

NO.	DESCRIPTION
3.1	(N) WINDOW, SEE WINDOW SCHEDULE
3.2	(N) LOUVER, SEE WINDOW SCHEDULE
3.3	(N) DOOR, SEE DOOR SCHEDULE
3.4	(N) PERFORATED METAL SCREEN, SEE SHEET A-402 FOR MORE INFORMATION
3.5	(N) STANDING SEAM ROOFING BY MBCI OR APPROVED EQUAL. DOUBLE-LOK ROOF PANEL, COLOR: SLATE GRAY
3.6	(E) STRUCTURAL POST TO RECEIVE NEW PAINTING, COLOR:RECLAIMED WOOD, DET625 BY DUNN EDWARDS, TYP.
3.7	PAINT EXTERIOR WALLS, ICY WHITE DEHW 10 MATTE (OR EQUAL), INCLUDING EXPOSED FOUNDATIONS
3.8	ALL (E) ROOF FRAMING TO RECEIVE NEW PAINTING, COLOR:RECLAIMED WOOD, DET625 BY DUNN EDWARDS, TYP.
3.9	(N) GALVANIZED METAL GUTTER BY SEAL-TITE OR APPROVED EQUAL. 6" K-STYLE, LT-GUTTER, COLOR: SLATE GRAY. SLOPE THE GUTTER TOWARDS THE DOWNSPOUTS
3.10	(N) GALVANIZED METAL DOWNSPOUT BY SEAL-TITE OR APPROVED EQUAL. 3"X4" CORRUGATED LT DOWNSPOUTS & ELBOWS, COLOR: SLATE GRAY. SEE CIVIL PLANS FOR UNDERGROUND PIPING
3.11	WALL MOUNTED ATTACHED SIGNAGE AT 5'-0" HEIGHT AND 12" DEPTH. PROVIDED BY SIGNAGE VENDOR AS DEFERRED SUBMITTAL
3.12	(N) PRESSURE RELIEF LOUVER PER MECHANICAL PLANS
3.13	(N) GALVANIZED METAL DOWNSPOUT BY SEAL-TITE OR APPROVED EQUAL. 3"X4" CORRUGATED LT DOWNSPOUTS & ELBOWS, COLOR: SLATE GRAY. DRAIN ONTO THE CONCRETE PAVING
3.14	(N) PERFORATED METAL SCREEN ATTACHED TO DOOR, SEE SHEET A-402 FOR MORE INFORMATION

ANNOTATIONS AND DEFINITIONS

D - DENOTES DEMOLITION
E - DENOTES EXISTING TO REMAIN
R - DENOTES RELOCATED

APPROVAL

CITY APPROVED BY:

DIRECTOR OF PUBLIC WORKS — DATE

CITY REVIEWED BY:

SENIOR ENGINEER — DATE

SUBMITTED BY:

DATE

CLIENT

LANCASTER
Creating a better tomorrow. Together.

CITY OF LANCASTER

44933 FERN AVENUE
LANCASTER, CA 93534

PROJECT NAME

SAMARITAN'S PURSE PARK FORMERLY KNOWN AS EL DORADO PARK RENOVATION

PWCP NO. 24-008

44501 5TH ST EAST
LANCASTER, CA 93535

ENGINEER/ARCHITECT

IDS

IDS GROUP

1 PETERS CANYON ROAD, SUITE 130
IRVINE, CA 92606
TEL: 949-387-8500, FAX: 949-387-0800

STAMP

REGISTERED ARCHITECT
JOSEPH SIBBALD
No. 15573
REN. 7-31-25
STATE OF CALIFORNIA

ISSUE

REV.	DESCRIPTION	DATE
	30% CD SET	12/15/23
	60% CD SET	01/12/24
	90% CD SET	02/26/24
1	CLIENT REVISIONS	04/26/24
2	BID SET	09/10/24
3	BULLETIN #1	10/25/24
4	BULLETIN #1 R1	2/14/25
	COMPOSITE SET	9/24/25

PROJECT IDENTIFICATION

THIS DRAWING WAS CREATED IN REVIT V. 2020 UNLESS OTHERWISE NOTED.

THE ORIGINAL SIZE OF THIS SHEET IS 30" X 42"

THESE DRAWINGS AND SPECIFICATIONS ARE THE PROPERTY AND COPYRIGHT OF IDS GROUP AND SHALL NOT BE USED ON ANY OTHER PROJECT OR LOCATIONS EXCEPT AS DESCRIBED ON THE DRAWINGS, WITHOUT THE WRITTEN AGREEMENT WITH IDS GROUP.

IDS PROJECT NO.	22X099.03
IDS DRAWN BY	MJ
IDS CHECKED BY	MM
IDS APPROVED BY	JS

SHEET TITLE

(E) COMMUNITY CENTER - PROPOSED EXT. ELEVATIONS

SHEET NUMBER

A-401

IDS GROUP - FILE LOCATION: C:\Users\matisa.javaherian\Documents\22X099.01 LANC - EL DORADO PARK (E) COMMUNITY CENTER RENOVATION_ARCH_R17_22X22_matisa.javaherian.rvt
PLOT DATE: 10/29/2024 4:32:05 PM
USER: Author

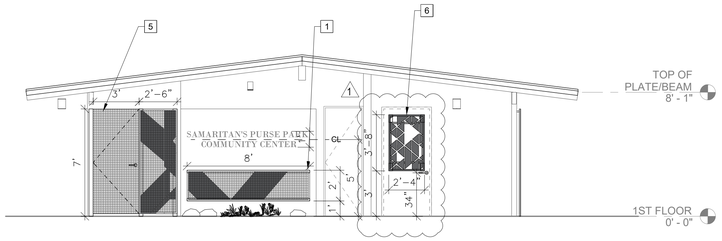

EAST ELEVATION | 1/4"=1'-0" | 4

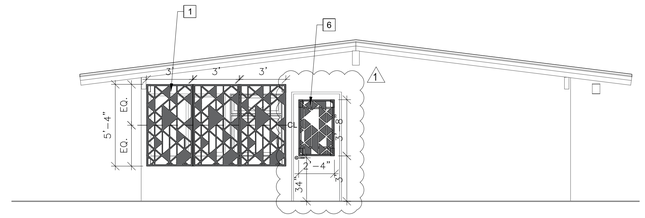

WEST ELEVATION | 1/4"=1'-0" | 3

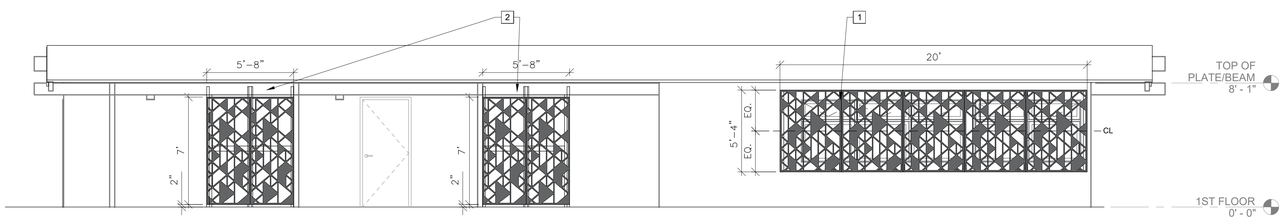

NORTH ELEVATION | 1/4"=1'-0" | 2

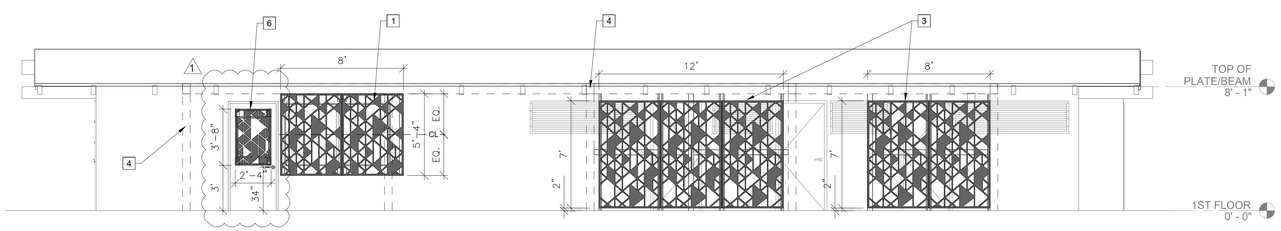

SOUTH ELEVATION | 1/4" = 1'-0" | 1

KEYNOTES

1. NEW PERFORATED METAL PANEL ATTACHED TO THE EXISTING EXTERIOR WALL.
2. NEW PERFORATED METAL PANEL ATTACHED TO THE EXISTING BEAM.
3. NEW PERFORATED METAL PANEL ATTACHED TO THE CANOPY.
4. NEW CANOPY. SEE SHEET A-600.
5. NEW PERFORATED METAL PANEL OPENING TO ACCESS TO MECH. PAD. 1
6. NEW PERFORATED METAL SCREEN ATTACHED TO THE METAL EXTERIOR DOOR.

MOZ METAL PANELS COLORS & PATTERNS

DECO
DARK GREY METALLIC

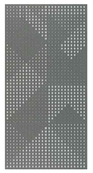

FLIGHT SERIES
DARK GREY METALLIC

APPROVAL

CITY APPROVED BY:

DIRECTOR OF PUBLIC WORKS DATE

CITY REVIEWED BY:

SENIOR ENGINEER DATE

SUBMITTED BY:

DATE

CLIENT

LANCASTER
Creating a better tomorrow. Together.

CITY OF LANCASTER

44933 FERN AVENUE
LANCASTER, CA 93534

PROJECT NAME

SAMARITAN'S PURSE PARK FORMERLY KNOWN AS EL DORADO PARK RENOVATION

PWCP NO. 24-008

44501 5th STREET EAST
LANCASTER, CA 93535

ENGINEER/ARCHITECT

IDS

IDS GROUP

1 PETERS CANYON ROAD, SUITE 130
IRVINE, CA. 92606
TEL: 949-387-8500, FAX: 949-387-0800

STAMP

LICENSED ARCHITECT
JOSEPH SILBER
REN. 7-31-25
STATE OF CALIFORNIA

DATE SIGNED: 02/26/2024

ISSUE

REV.	DESCRIPTION	DATE
	30% CD SET	12/15/23
	60% CD SET	01/19/24
	90% CD SET	02/26/24
1	CLIENT REVISION	04/26/24
2	BID SET	09/10/24
3	BULLETIN #1	10/25/24
4	BULLETIN #1 R1	2/14/25
	COMPOSITE SET	9/24/25

PROJECT IDENTIFICATION

THIS DRAWING WAS CREATED IN AUTODESK AUTOCAD V. 2021 UNLESS OTHERWISE NOTED.

THE ORIGINAL SIZE OF THIS SHEET IS 30" X 42"

THESE DRAWINGS AND SPECIFICATIONS ARE THE PROPERTY AND COPYRIGHT OF IDS GROUP AND SHALL NOT BE USED ON ANY OTHER PROJECT OR LOCATIONS EXCEPT AS DESCRIBED ON THE DRAWINGS, WITHOUT THE WRITTEN AGREEMENT WITH IDS GROUP.

IDS PROJECT NO.	22X099.01
IDS DRAWN BY	MJ
IDS CHECKED BY	MM
IDS APPROVED BY	MM

SHEET TITLE

EXTERIOR ELEVATIONS - PANELS

SHEET NUMBER

A-402

SHEET NO. XXX OF XXX

CUMULATIVE SHEET NO. XXX OF XXX

PROGRESS SET - NOT FOR CONSTRUCTION

IDS GROUP - FILE LOCATION: S:\PROJECTS\2022\SHARED\22X099.01 LANC - EL DORADO PARK\05 CAD\01 ARCH\01 ARCH FOR EXISTING BLDG\A-402_EXTERIOR ELEVATIONS-PANELS PLOT DATE: 10/29/2024 4:18:58 PM USER: MAHSA.JAVAHERIAN

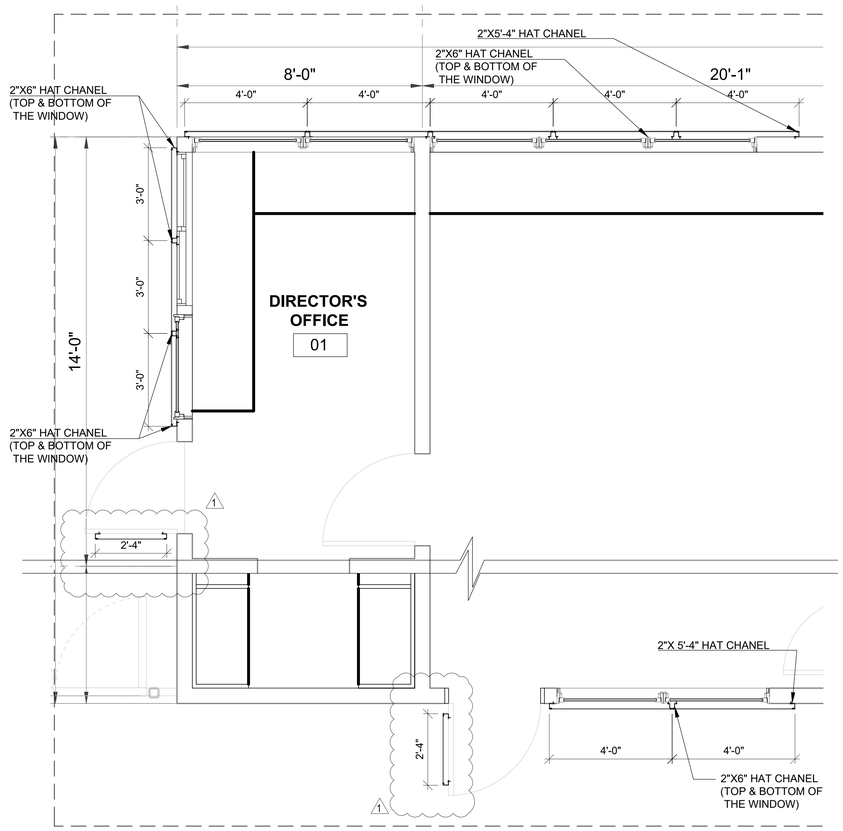

ENLARGED PERFORATED METAL PANELS PLAN (MOZ 2" HAT CHANEL) 1/2" = 1'-0" 14

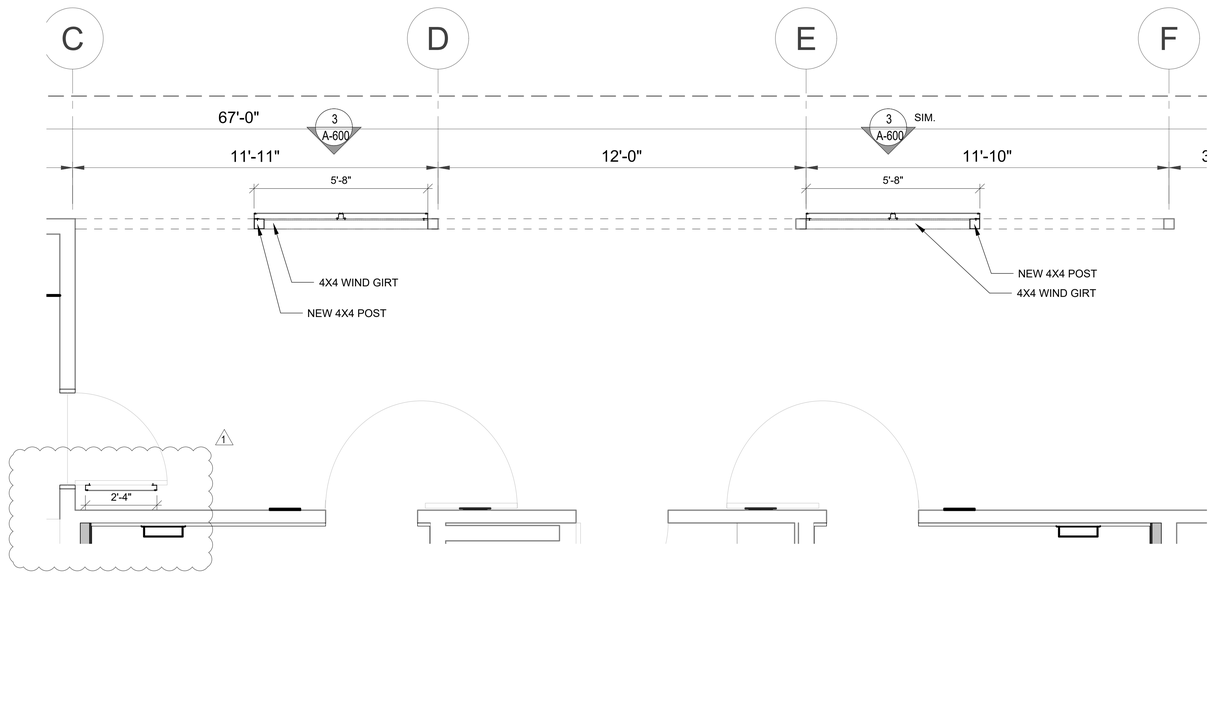

ENLARGED PERFORATED METAL PANELS PLAN (MOZ 2" HAT CHANEL) 1/2" = 1'-0" 2

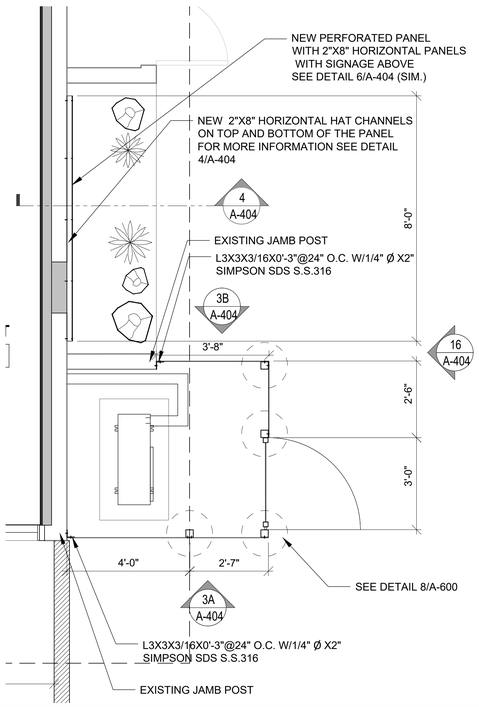

ENLARGED PERFORATED METAL PANELS PLAN (MOZ 2" HAT CHANEL) 1/2" = 1'-0" 13

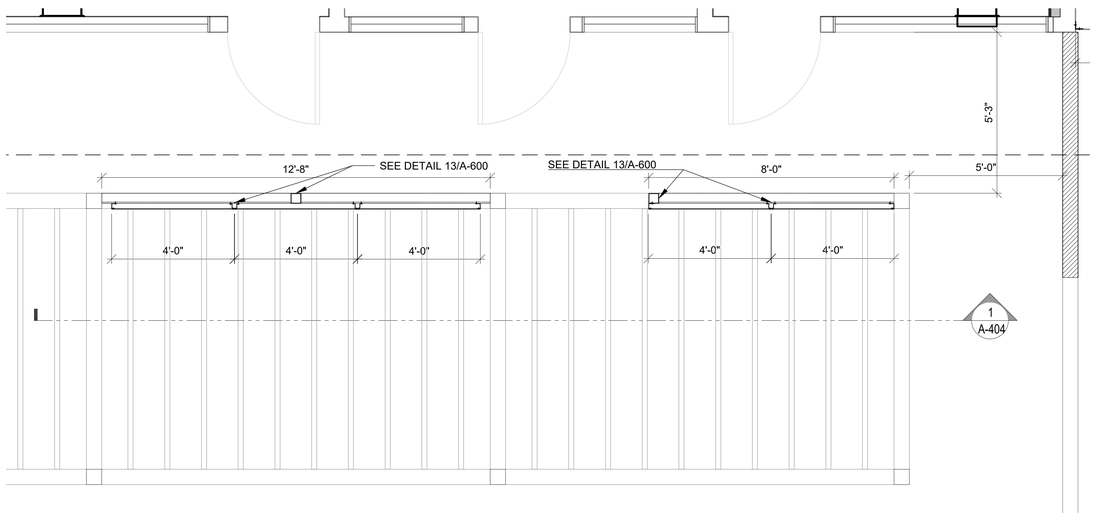

ENLARGED PERFORATED METAL PANELS PLAN (MOZ 2" HAT CHANEL) 1/2" = 1'-0" 1

APPROVAL

CITY APPROVED BY:

DIRECTOR OF PUBLIC WORKS DATE

CITY REVIEWED BY:

SENIOR ENGINEER DATE

SUBMITTED BY:

DATE

CLIENT

LANCASTER

Creating a better tomorrow. Together.

CITY OF LANCASTER

44933 FERN AVENUE
LANCASTER, CA 93534

PROJECT NAME

SAMARITAN'S PURSE PARK FORMERLY KNOWN AS EL DORADO PARK RENOVATION

PWCP NO. 24-008

44501 5th STREET EAST
LANCASTER, CA 93535

ENGINEER/ARCHITECT

IDS

IDS GROUP

1 PETERS CANYON ROAD, SUITE 130
IRVINE, CA. 92606
TEL: 949-387-8500, FAX: 949-387-0800

STAMP

LICENSED ARCHITECT JOSEPH SHARP REN. 7-31-25 STATE OF CALIFORNIA

DATE SIGNED: 02/26/2024

ISSUE

REV.	DESCRIPTION	DATE
	30% CD SET	12/15/23
	60% CD SET	01/19/24
	90% CD SET	02/26/24
1	CLIENT REVISION	04/26/24
2	BID SET	09/10/24
3	BULLETIN #1	10/25/24
4	BULLETIN #1 R1	2/14/25
	COMPOSITE SET	9/24/25

PROJECT IDENTIFICATION

THIS DRAWING WAS CREATED IN AUTODESK AUTOCAD V. 2021 UNLESS OTHERWISE NOTED.

THE ORIGINAL SIZE OF THIS SHEET IS 30" X 42"

THESE DRAWINGS AND SPECIFICATIONS ARE THE PROPERTY AND COPYRIGHT OF IDS GROUP AND SHALL NOT BE USED ON ANY OTHER PROJECT OR LOCATION EXCEPT AS DESCRIBED ON THE DRAWINGS, WITHOUT THE WRITTEN AGREEMENT WITH IDS GROUP.

IDS PROJECT NO.	22X099.01
IDS DRAWN BY	MJ
IDS CHECKED BY	MM
IDS APPROVED BY	MM

SHEET TITLE

ENLARGED METAL PANEL PLANS

SHEET NUMBER

A-403

SHEET NO. XXX OF XXX

CUMULATIVE SHEET NO. XXX OF XXX

PROGRESS SET - NOT FOR CONSTRUCTION

IDS GROUP - FILE LOCATION: S:\PROJECTS\2022\SHARED\22X099.01 LANC - EL DORADO PARK\05 CAD\01 ARCH\01 ARCH FOR EXISTING BLDG\A-402_EXTERIOR ELEVATIONS-PANELS PLOT DATE: 10/29/2024 4:19:04 PM USER: MAHSA.JAVAHERIAN

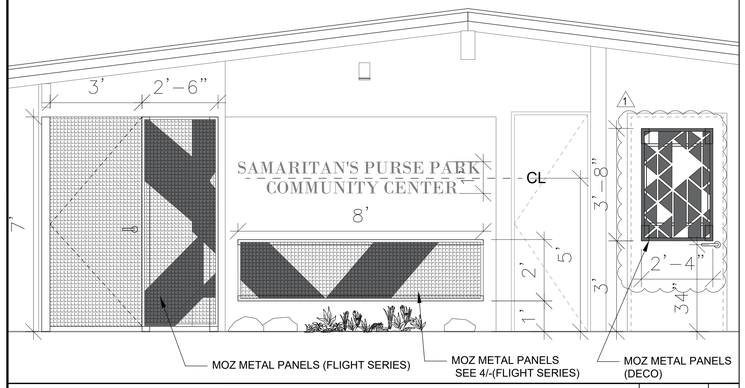

EAST ELEVATION METAL PANELS (MOZ 2" HAT CHANEL) | 1/2" = 1'-0" | 16

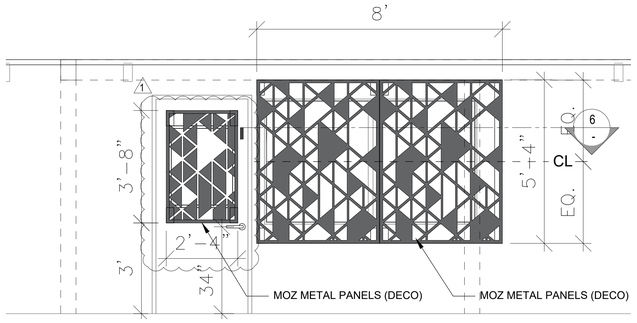

SOUTH ELEVATION METAL PANELS (MOZ 2" HAT CHANEL) | 1/2" = 1'-0" | 15

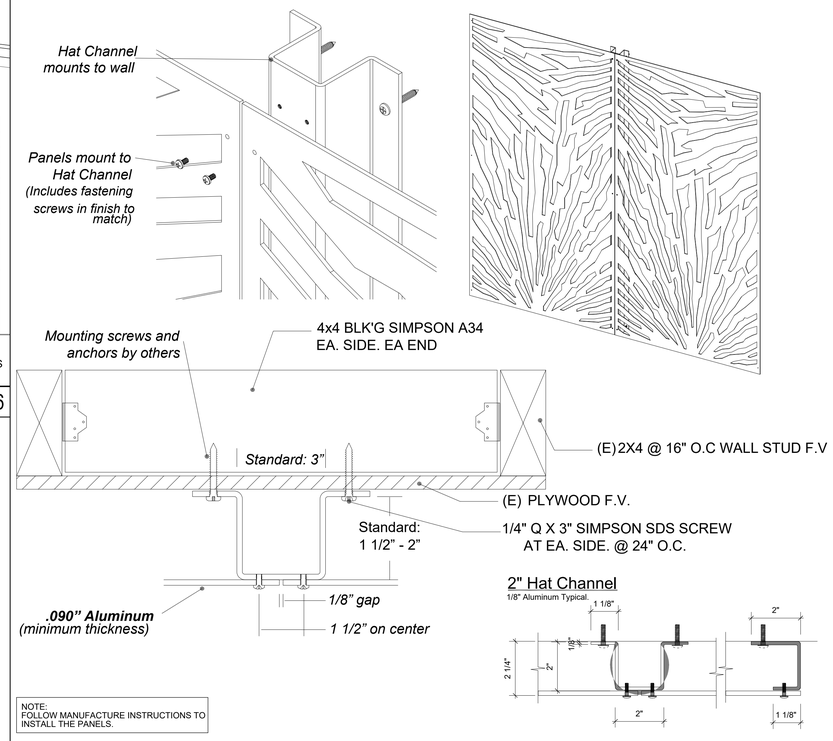

NOTE:
FOLLOW MANUFACTURE INSTRUCTIONS TO INSTALL THE PANELS.

MOZ PERFORATED METAL PANELS DETAIL | N.T.S. | 6

GENERAL NOTES:
MOZ DESIGNS PERFORATED METAL PANELS TO BE USED FOR THIS PROJECT AT THE CITY'S REQUEST AND PREFERRED VENDOR.

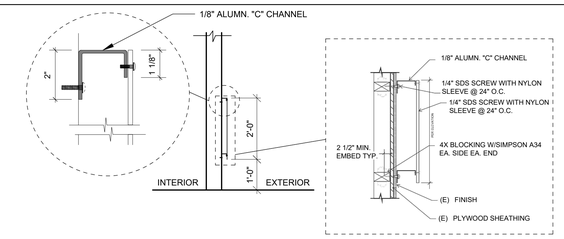

DECORATIVE METAL PANEL (FLIGHT SERIES) / EAST WALL SECTION | N.T.S. | 4

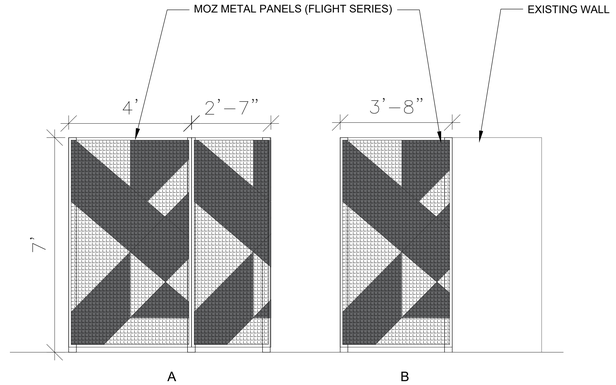

SOUTH & NORTH ELEVATION OF METAL PANELS /MECHANICHAL) | 1/2"=1'-0" | 3

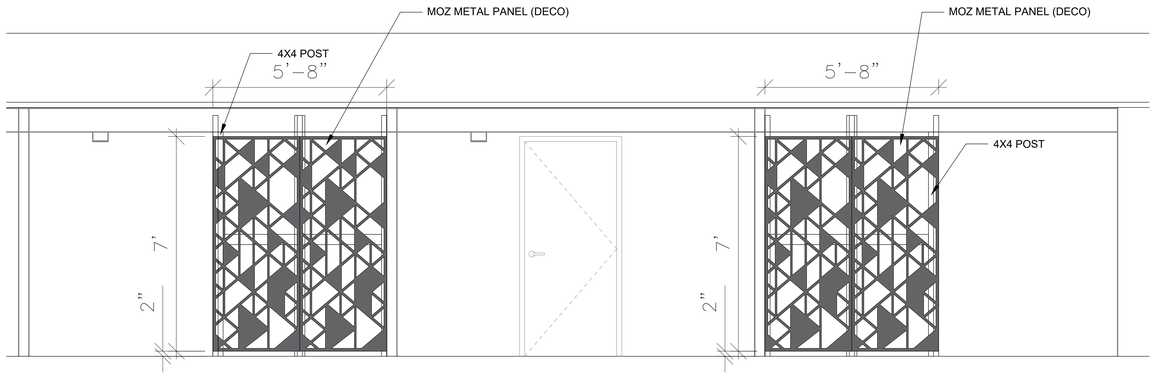

NORTH ELEVATION - PERFORATED METAL PANELS (ZAHNER DROP & LOCK SYSTEM WITH MULLION & ANCHOR) | 1/2" = 1'-0" | 10

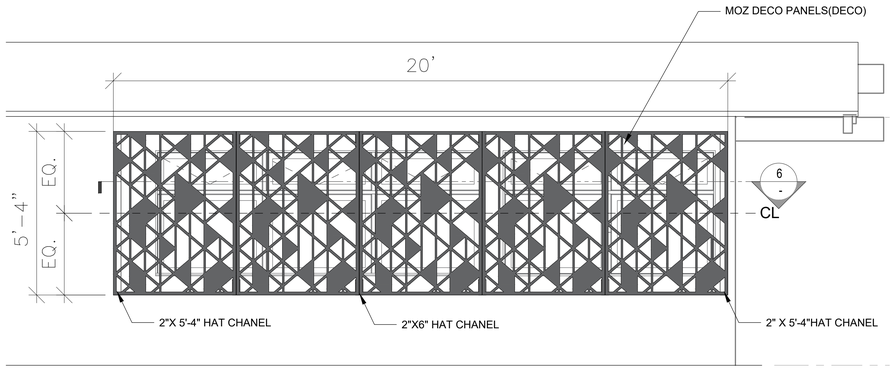

NORTH ELEVATION METAL PANELS (MOZ 2" HAT CHANEL) | 1/2" = 1'-0" | 2

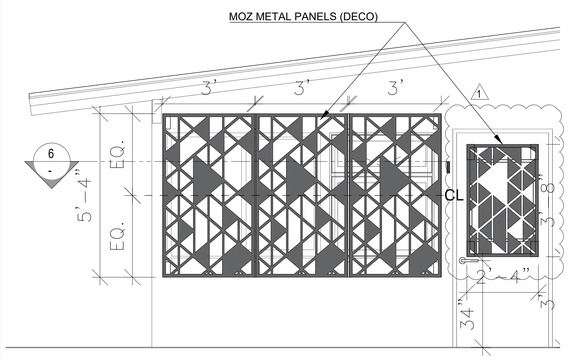

WEST ELEVATION METAL PANELS (MOZ 2" HAT CHANEL) | 1/2" = 1'-0" | 17

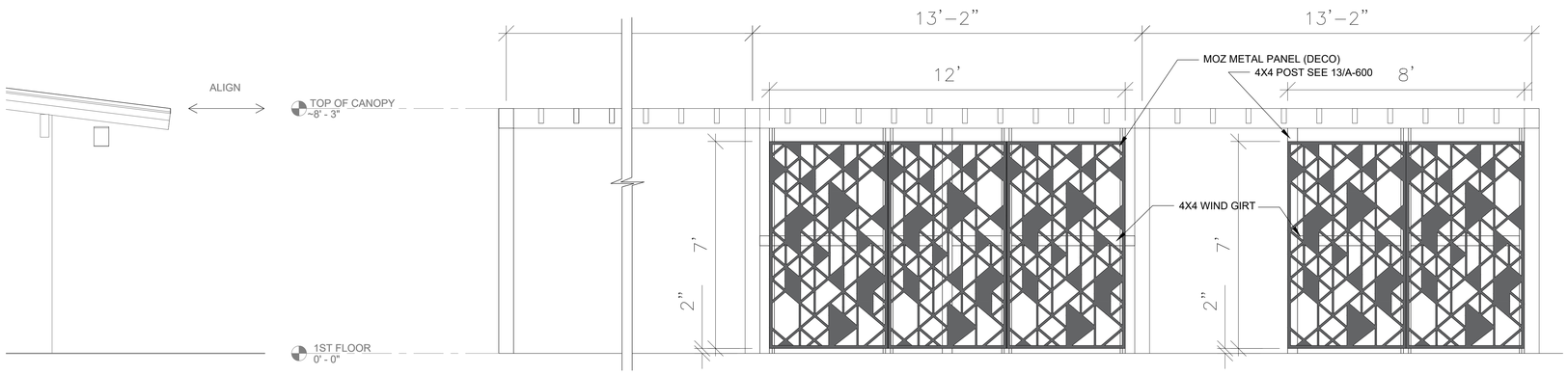

METAL CANOPY SECTION - PERFORATED METAL PANELS (ZAHNER DROP & LOCK SYSTEM WITH MULLION & ANCHOR) | 1/2" = 1'-0" | 1

APPROVAL

CITY APPROVED BY:
DIRECTOR OF PUBLIC WORKS DATE
CITY REVIEWED BY:
SENIOR ENGINEER DATE
SUBMITTED BY:
DATE

CLIENT
LANCASTER
Creating a better tomorrow. Together.
CITY OF LANCASTER
44933 FERN AVENUE
LANCASTER, CA 93534

PROJECT NAME
SAMARITAN'S PURSE PARK FORMERLY KNOWN AS EL DORADO PARK RENOVATION

PWCP NO. 24-008

44501 5th STREET EAST
LANCASTER, CA 93535

ENGINEER/ARCHITECT
IDS
IDS GROUP
1 PETERS CANYON ROAD, SUITE 130
IRVINE, CA. 92606
TEL: 949-387-8500, FAX: 949-387-0800

STAMP
LICENSED ARCHITECT
JOSEPH D. MARSH III
REN. 7-31-25
STATE OF CALIFORNIA
DATE SIGNED: 02/26/2024

ISSUE

REV.	DESCRIPTION	DATE
	30% CD SET	12/15/23
	60% CD SET	01/19/24
	90% CD SET	02/26/24
1	CLIENT REVISION	04/26/24
2	BID SET	09/10/24
3	BULLETIN #1	10/25/24
4	BULLETIN #1 R1	2/14/25
	COMPOSITE SET	9/24/25

PROJECT IDENTIFICATION
THIS DRAWING WAS CREATED IN AUTODESK AUTOCAD V. 2021 UNLESS OTHERWISE NOTED.
THE ORIGINAL SIZE OF THIS SHEET IS 30" X 42"
THESE DRAWINGS AND SPECIFICATIONS ARE THE PROPERTY AND COPYRIGHT OF IDS GROUP AND SHALL NOT BE USED ON ANY OTHER PROJECT OR LOCATIONS EXCEPT AS DESCRIBED ON THE DRAWINGS, WITHOUT THE WRITTEN AGREEMENT WITH IDS GROUP.

IDS PROJECT NO.	22X099.01
IDS DRAWN BY	MJ
IDS CHECKED BY	MM
IDS APPROVED BY	MM

SHEET TITLE
METAL PANELS DETAILS

SHEET NUMBER
A-404

SHEET NO. XXX OF XXX
CUMULATIVE SHEET NO. XXX OF XXX

PROGRESS SET - NOT FOR CONSTRUCTION

IDS GROUP - FILE LOCATION: S:\PROJECTS\2022\SHARED\22X099.01 LANC - EL DORADO PARK\05 CAD\01 ARCH\01 ARCH FOR EXISTING BLDG\A-402_EXTERIOR ELEVATIONS-PANELS PLOT DATE: 10/29/2024 4:19:14 PM USER: MAHSA.JAVAHERIAN

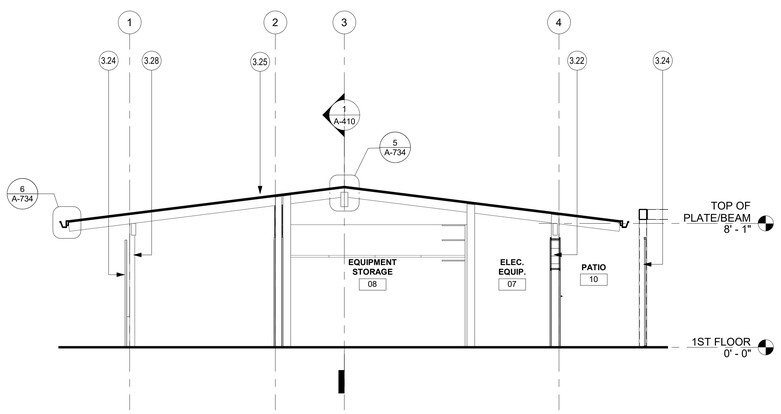

BUILDING SECTION 03 | 1/4" = 1'-0" | 3

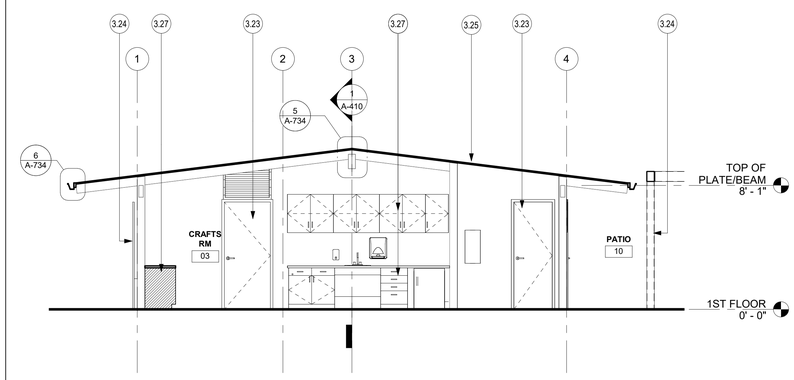

BUILDING SECTION 02 | 1/4" = 1'-0" | 2

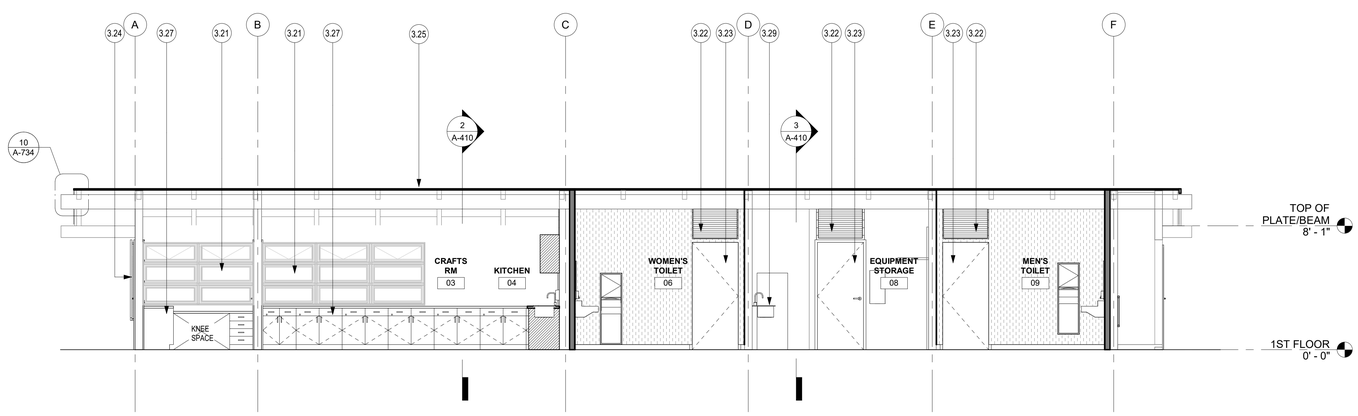

BUILDING SECTION 01 | 1/4" = 1'-0" | 1

GENERAL NOTES

1. SEE G-001 SHEET FOR ADDITIONAL NOTES AND ABBREVIATIONS.
2. ALL EXISTING WORK TO REMAIN UNLESS OTHERWISE NOTED.
3. PROTECT WORK AREA INCLUDING NEW AND EXISTING MATERIALS AND FINISHES FROM DAMAGE WHICH MAY OCCUR FROM CONSTRUCTION, DEMOLITION, DUST, WATER, ETC. PROVIDE AND MAINTAIN TEMPORARY BARRICADES, CLOSURE WALLS, AS REQUIRED TO PROTECT THE PUBLIC AND BUILDING OCCUPANTS DURING CONSTRUCTION. DAMAGE TO NEW AND EXISTING STRUCTURES, EQUIPMENT, MATERIALS AND FINISHES SHALL BE REPAIRED OR REPLACED TO THE SATISFACTION OF THE OWNER AT THE SOLE EXPENSE OF THE CONTRACTOR.
4. REMOVE ALL EXISTING MATERIALS CREATING UNEVEN, OUT OF TOLERANCE SUBSTRATE INCLUDING BUT NOT LIMITED TO FASTENERS, COVER PLATES, RESILIENT FLOORING, CARPET PAD, ETC.
5. ALL LIFE SAFETY DEVICES SHALL REMAIN ACTIVE DURING DEMOLITION AND CONSTRUCTION.

KEYNOTES

NO.	DESCRIPTION
3.21	(N) WINDOW, SEE WINDOW SCHEDULE
3.22	(N) LOUVER, SEE WINDOW SCHEDULE
3.23	(N) DOOR, SEE DOOR SCHEDULE
3.24	(N) PERFORATED METAL SCREEN
3.25	(N) STANDING SEAM ROOFING
3.27	(N) MILLWORK, SEE INTERIOR ELEVATIONS
3.28	(E) STRUCTURAL POST TO REMAIN. PROTECT IN PLACE
3.29	(N) PLUMBING FIXTURES, SEE THE PLUMBING PLANS

ANNOTATIONS AND DEFINITIONS

D - DENOTES DEMOLITION
E - DENOTES EXISTING TO REMAIN
R - DENOTES RELOCATED

APPROVAL

CITY APPROVED BY:

DIRECTOR OF PUBLIC WORKS DATE

CITY REVIEWED BY:

SENIOR ENGINEER DATE

SUBMITTED BY:

DATE

CLIENT

LANCASTER
Creating a better tomorrow. Together.

CITY OF LANCASTER

44933 FERN AVENUE
LANCASTER, CA 93534

PROJECT NAME

SAMARITAN'S PURSE PARK FORMERLY KNOWN AS EL DORADO PARK RENOVATION

PWCP NO. 24-008

44501 5TH ST EAST
LANCASTER, CA 93535

ENGINEER/ARCHITECT

IDS

IDS GROUP

1 PETERS CANYON ROAD, SUITE 130
IRVINE, CA 92606
TEL: 949-387-8500, FAX: 949-387-0800

STAMP

LICENSED ARCHITECT
JOSEPH SIEGFRIED
No. C-15573
REN. 7-31-25
STATE OF CALIFORNIA

ISSUE

REV.	DESCRIPTION	DATE
	30% CD SET	12/15/23
	60% CD SET	01/12/24
	90% CD SET	02/26/24
1	CLIENT REVISIONS	04/26/24
2	BID SET	09/10/24
3	BULLETIN #1	10/25/24
4	BULLETIN #1 R1	2/14/25
	COMPOSITE SET	9/24/25

PROJECT IDENTIFICATION

THIS DRAWING WAS CREATED IN REVIT V. 2020 UNLESS OTHERWISE NOTED.

THE ORIGINAL SIZE OF THIS SHEET IS 30" X 42"

THESE DRAWINGS AND SPECIFICATIONS ARE THE PROPERTY AND COPYRIGHT OF IDS GROUP AND SHALL NOT BE USED ON ANY OTHER PROJECT OR LOCATIONS EXCEPT AS DESCRIBED ON THE DRAWINGS, WITHOUT THE WRITTEN AGREEMENT WITH IDS GROUP.

IDS PROJECT NO.	22X099.03
IDS DRAWN BY	MJ
IDS CHECKED BY	MM
IDS APPROVED BY	JS

SHEET TITLE

(E) COMMUNITY CENTER - PROPOSED BLDG SECTIONS

SHEET NUMBER

A-410

IDS GROUP - FILE LOCATION: C:\Users\mathisa.javaherian\Documents\22X099.01 LANC - EI DORADO PARK (E) COMMUNITY CENTER RENOVATION_ARCH_R17-2022_mathisa.javaherian.rvt
PLOT DATE: 10/29/2024 4:32:07 PM
USER: Author

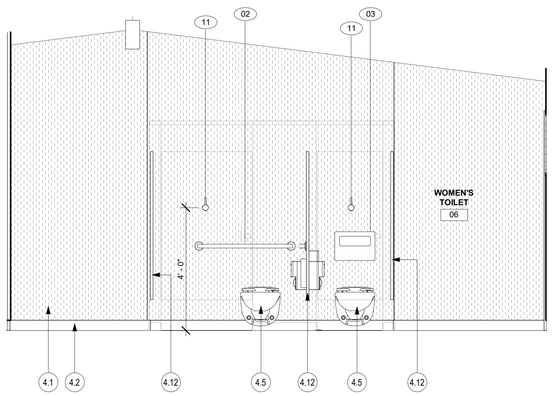

WOMEN'S TOILET ELEVATION 04 | 1/2" = 1'-0" | 8

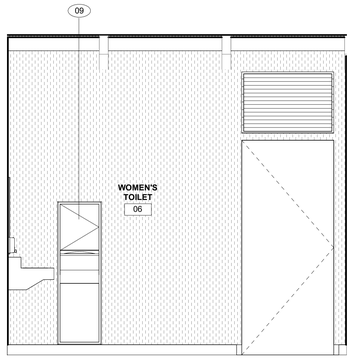

WOMEN'S TOILET ELEVATION 02 (TYPICAL) | 1/2" = 1'-0" | 4

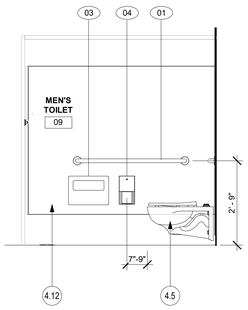

ACC. STALL #02 | 1/2" = 1'-0" | 15

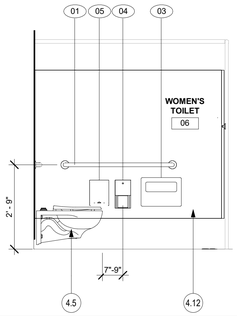

ACC. STALL #01 | 1/2" = 1'-0" | 11

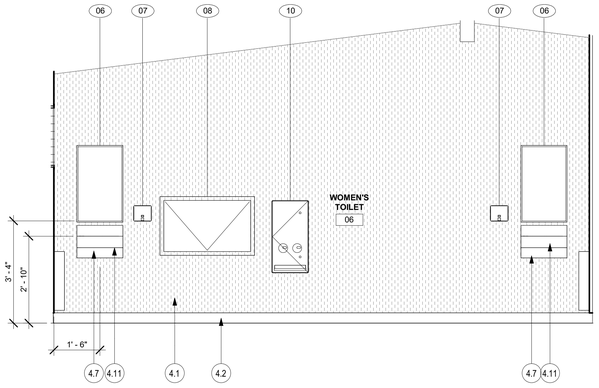

WOMEN'S TOILET ELEVATION 03 | 1/2" = 1'-0" | 7

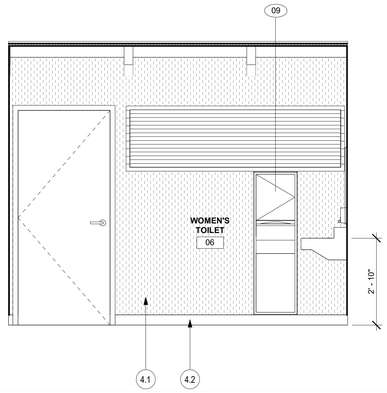

WOMEN'S TOILET ELEVATION 01 (TYPICAL) | 1/2" = 1'-0" | 3

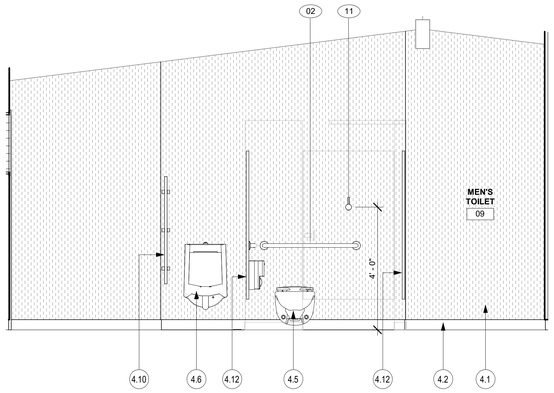

MEN'S TOILET ELEVATION 02 | 1/2" = 1'-0" | 10

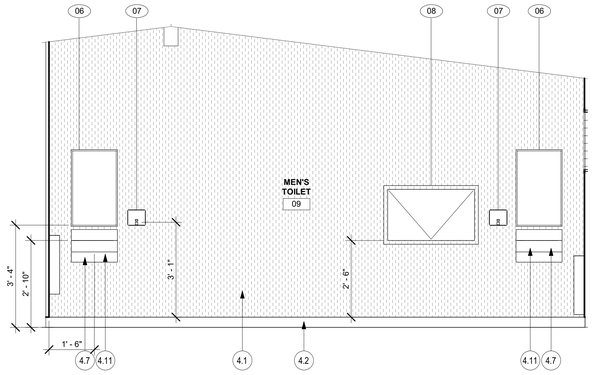

MEN'S TOILET ELEVATION 01 | 1/2" = 1'-0" | 9

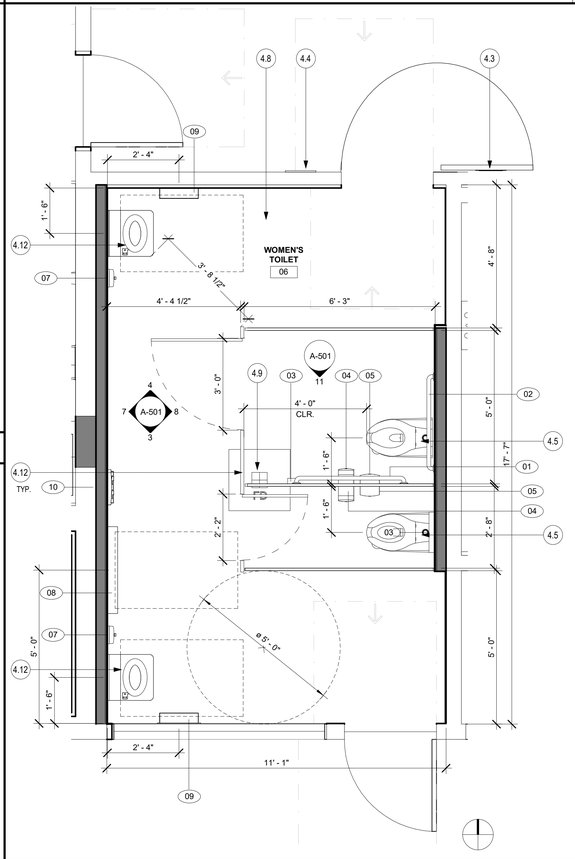

ENLARGED WOMEN'S TOILET | 1/2" = 1'-0" | 5

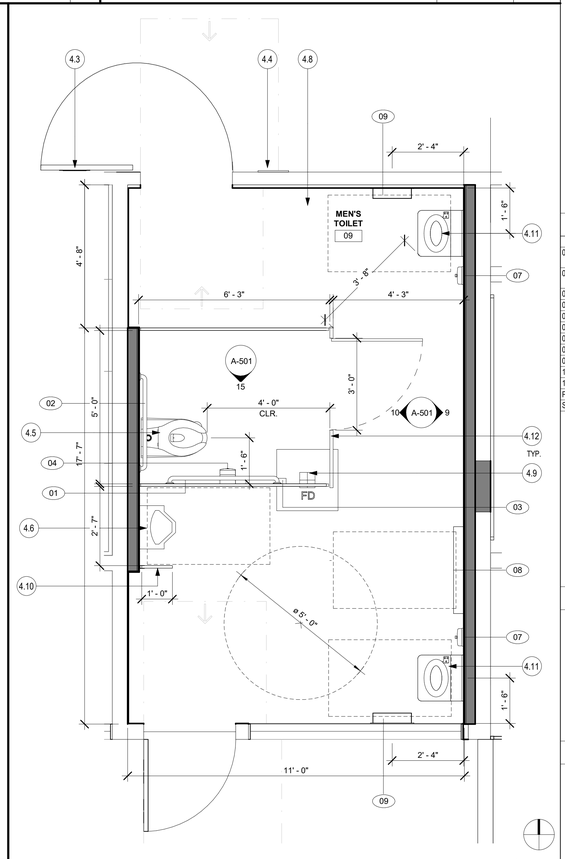

ENLARGED MEN'S TOILET | 1/2" = 1'-0" | 1

GENERAL NOTES

1. SEE G-SHEET SERIES FOR ADDITIONAL NOTES AND ABBREVIATIONS.
2. PARTITIONS DIMENSIONED TO FINISH FACE U.O.N. DO NOT ADJUST DIMENSIONS INDICATED AS "CLEAR" WITHOUT WRITTEN DIRECTION FROM ARCHITECT. DRAWINGS SHALL NOT BE SCALED. VERIFY ALL DIMENSIONS AND EXISTING AS BUILT FIELD CONDITIONS, INCLUDING FIELD MEASUREMENTS PRIOR TO START OF WORK, NOTIFY ARCHITECT WHERE DISCREPANCIES OCCUR.
3. USE TYPE "X" GWB ON FIRE RATED PARTITIONS.
4. USE CEMENTITIOUS BACKER BOARD ("DUROCK") OR EQUAL AT PARTITIONS SCHEDULED TO RECEIVE CERAMIC TILE (U.O.N.). SEE FINISH PLAN FOR LOCATION OF TILE.
5. WHERE FURRED PARTITIONS EXCEED MAXIMUM HEIGHT, BRACE TO ADJACENT STRUCTURE.
6. FIRE SAFE PENETRATIONS AT FIRE RESISTANT RATED PARTITIONS PER APPLICABLE UL ASSEMBLY. SEE A7 SHEET SERIES FOR DETAILS.
7. MAINTAIN INTEGRITY OF EXISTING FIRE RESISTANT RATED ASSEMBLIES FOR ALL PENETRATIONS.
8. PROVIDE BLOCKING AS REQUIRED AT LOCATIONS INCLUDING, BUT NOT LIMITED TO: GRAB BARS, SHELVING, OVERHEAD CABINETS, SIGNAGE, TOILET ROOM ACCESSORIES, WALL MOUNT. EQUIPMENT, ETC.
9. PROVIDE LEVEL 4 FINISH U.O.N. PROVIDE LEVEL 5 FINISH AT ALL PARTITIONS TO RECEIVE WALL COVERING. REFER TO FINISH PLANS FOR LOCATIONS AND ADDITIONAL INFORMATION.
10. LARGE SCALE DRAWINGS TAKE PRECEDENCE OVER SMALL SCALE DRAWINGS. DETAILS TAKE PRECEDENCE OVERALL, NOTIFY ARCHITECT IN WRITING WHERE DISCREPANCIES OCCUR.
11. ALL EXPOSED OUTSIDE GYPSUM BOARD CORNERS SHALL HAVE A CONTINUOUS METAL CORNER BEAD.
12. DIMENSIONS TAKEN FROM PERIMETER EXTERIOR WINDOW WALL ARE TAKEN FROM THE INSIDE FACE OF THE VERTICAL MULLION. DIMENSIONS MARKED VERIFY IN FIELD. SHALL BE VERIFIED PRIOR TO START OF WORK UNLESS OTHERWISE NOTED.
13. CONTRACTOR SHALL COORDINATE WORK WITH HVAC, MECHANICAL, ELECTRICAL, PLUMBING, DESIGN BUILD FIRE PROTECTION AND STRUCTURAL DRAWINGS AND REPORT TO THE ARCHITECT DISCREPANCIES FOR CORRECTION AND ADJUSTMENT PRIOR TO START OF WORK. NO ALLOWANCE WILL BE MADE FOR INCREASED COST DUE TO THE CONTRACTOR'S LACK OF COORDINATION.
14. PATCH FLOOR AND WALL AREAS DAMAGED DUE TO NEW CONSTRUCTION OR WHERE PENETRATIONS HAVE BEEN MADE FOR MECHANICAL, ELECTRICAL AND PLUMBING WORK. FIRESAFE AT UL RATED ASSEMBLIES CONSISTENT WITH EXISTING UL RATING.
15. WHERE EXISTING RATED ASSEMBLIES ARE SHOWN, CONTRACTOR IS REQUESTED TO FIELD VERIFY AS BUILT FIELD CONDITIONS TO CONFIRM RATINGS SHOWN. IF NON-COMPLIANT CONDITIONS ARE FOUND, DEMO AND REPLACE WITH NEW EQUIVALENT UL ASSEMBLY, OR REPORT FINDINGS TO OWNER/ARCHITECT IN WRITING WHO WILL PROVIDE WRITTEN DIRECTION.
16. PATCH AND REPAIR ALL EXISTING PARTITIONS AFTER DEMOLITION WHERE DAMAGE HAS OCCURRED AT UNPROTECTED LOCATIONS. PLEASE NOTE THAT DEMOLITION ACTIVITY MAY OCCUR BEYOND WORK LIMITS SHOWN ON DEMOLITION PLAN DUE TO CONCEALED CONDITIONS.
17. ALL LIGHT GAUGE COLD FORMED METAL FRAMING SHALL MEET OR EXCEED PROPERTIES SPECIFIED FOR THE CORRESPONDING MEMBER SIZE IN STEEL MANUFACTURERS ASSOCIATION [SSMA] PRODUCT TECHNICAL INFORMATION [ICC-ES REPORT NO. ER-4943P] AND SHALL COMPLY WITH APPLICABLE AMERICAN SOCIETY FOR TESTING AND MATERIALS, AMERICAN IRON AND STEEL INSTITUTE S100 AND SPECIFIED TRUE GAUGE FLAT STEEL MIL THICKNESS THAT ONLY TRUE GAUGE FLAT STEEL CAN SATISFY. USE OF "EFFECTIVE THICKNESS" COLD REDUCED AFTERMARKET EQUIVALENT PRODUCT (EQ) STUDS FURNISHED BY EQ STUD MANUFACTURERS, VENDORS OR SUPPLIERS ARE NOT PERMITTED WITHOUT EXCEPTION.
18. REQUIRED MARKING AND IDENTIFICATION OF PARTITIONS. WHERE THERE IS AN ACCESSIBLE CONCEALED FLOOR, FLOOR-CEILING OR ATTIC SPACE, FIRE WALLS, FIRE BARRIERS, FIRE PARTITIONS, SMOKE BARRIERS AND SMOKE PARTITIONS OR ANY OTHER WALL REQUIRED TO HAVE PROTECTED OPENINGS OR PENETRATIONS SHALL BE EFFECTIVELY AND PERMANENTLY IDENTIFIED WITH SIGNS OR STENCILING IN THE CONCEALED SPACE. SUCH IDENTIFICATION SHALL BE LOCATED WITHIN 15 FEET (4572 MM) OF THE END OF EACH WALL AND AT INTERVALS NOT EXCEEDING 30 FEET (9144 MM) MEASURED HORIZONTALLY ALONG THE WALL OR PARTITION AND INCLUDE LETTERING NOT LESS THAN 3 INCHES (76 MM) IN HEIGHT WITH A MINIMUM 3/8-INCH (9.5 MM) STROKE IN A CONTRASTING COLOR INCORPORATING THE SUGGESTED WORDING, "FIRE AND/OR SMOKE BARRIER — PROTECT ALL OPENINGS," OR OTHER WORDING BASED ON LOCAL JURISDICTION. REFER TO PARTITION SCHEDULE, PLAN AND LEGEND TO IDENTIFY APPLICABLE PARTITIONS.

KEYNOTES

NO.	DESCRIPTION
4.1	FRP WALL FINISH PER DETAIL 2/A-734, SEE FINISH SCHEDULE
4.2	COVE BASE TILE PER DETAIL 2/A-734, SEE FINISH SCHEDULE
4.3	DOOR SIGNAGE, SEE DETAIL 2/G-012
4.4	WALL SIGNAGE, SEE DETAIL 2/G-012
4.5	WALL MOUNTED WATER CLOSET, SEE THE PLUMBING PLANS
4.6	URINAL, SEE THE PLUMBING PLANS
4.7	SAFETY SHIELD FOR PIPES
4.8	EPOXY FLOORING, SEE DETAIL 2/A-734, SEE FINISH SCHEDULE
4.9	2'-0" X 2'-0" BOXED OUT FLOOR DRAIN, SEE THE PLUMBING PLANS
4.10	URINAL PRIVACY SCREEN, SEE SPECIFICATION ON THE FINISH SCHEDULE
4.11	SINK, SEE THE PLUMBING PLANS
4.12	RESTROOM PARTITION, SEE SPECIFICATION ON THE FINISH SCHEDULE

RESTROOM ACCESSORIES SCHEDULE

TAG	DESCRIPTION
01	42" GRAB BAR, 1 1/2" DIA. SATIN. S.S. W/ SNAP FLANGE (BOBRICK B-6806X42 OR EQUAL) & 12 GA. GALV. STL. CONCEALED ANCHOR PLATE (BOBRICK 2562 OR EQUAL)
02	36" GRAB BAR, 1 1/2" DIA. SATIN. S.S. W/ SNAP FLANGE (BOBRICK B-6806X36 OR EQUAL) & 12 GA. GALV. STL. CONCEALED ANCHOR PLATE (BOBRICK 2562 OR EQUAL)
03	SEAT COVER DISPENSER, BOBRICK B-4221
04	TOILET TISSUE DISPENSER, BOBRICK B-4288
05	SANITARY NAPKIN DISPOSAL, BOBRICK B-270
06	18"WX30"H MIRROR, BOBRICK B-165 1830, BOTTOM AT 40" MAX. AND TOP AT 74" MIN. A.F.F
07	WALL MOUNTED SOAP DISPENSER, BOBRICK B-4112
08	BABY CHANGING STATION, BOBRICK KB110-SSRE
09	RECESSED WASTE RECEPTACLE AND TOWEL DISPENSER COMBO, BOBRICK B-3944
10	RECESSED NAPKIN/TAMPON VENDOR, BOBRICK B-4706 (40" MAX AFF TOP OF COIN SLOT)
11	COAT HOOK
PD	ENMOTION 8" RECESSED DISPENSER – STAINLESS STEEL – 594664A
SD	WAXIE SELECT 1250ML BOTTLE 5634-01BCE00YL SOAP DISPENSER

NOTES:

ALL NUMBERS REFER TO BOBRICK ACCESSORIES UNLESS NOTED OTHERWISE

FOR MOUNTING HEIGHTS, TOILET, AND TOILET ACCESSORY DETAILS REFER DETAIL 6 & 11/G-012

PLAN LEGEND

XX — RESTROOM ACCESSORIES TAG

ANNOTATIONS AND DEFINITIONS

N - DENOTES NEW
E - DENOTES EXISTING TO REMAIN
R - DENOTES RELOCATED

APPROVAL

CITY APPROVED BY:

DIRECTOR OF PUBLIC WORKS — DATE

CITY REVIEWED BY:

SENIOR ENGINEER — DATE

SUBMITTED BY:

DATE

CLIENT

LANCASTER
Creating a better tomorrow. Together.

CITY OF LANCASTER

44933 FERN AVENUE
LANCASTER, CA 93534

PROJECT NAME

SAMARITAN'S PURSE PARK FORMERLY KNOWN AS EL DORADO PARK RENOVATION

PWCP NO. 24-008

44501 5TH ST EAST
LANCASTER, CA 93535

ENGINEER/ARCHITECT

IDS

IDS GROUP

1 PETERS CANYON ROAD, SUITE 130
IRVINE, CA. 92606
TEL: 949-387-8500, FAX: 949-387-0800

STAMP

REGISTERED PROFESSIONAL ENGINEER
JOSEPH SITEK
No. C-15573
REN. 7-31-25
STATE OF CALIFORNIA

ISSUE

REV.	DESCRIPTION	DATE
	30% CD SET	12/15/23
	60% CD SET	01/12/24
	90% CD SET	02/26/24
1	CLIENT REVISIONS	04/26/24
2	BID SET	09/10/24
3	BULLETIN #1	10/25/24
4	BULLETIN #1 R1	2/14/25
	COMPOSITE SET	9/24/25

PROJECT IDENTIFICATION

THIS DRAWING WAS CREATED IN REVIT V. 2020 UNLESS OTHERWISE NOTED.

THE ORIGINAL SIZE OF THIS SHEET IS 30" X 42"

THESE DRAWINGS AND SPECIFICATIONS ARE THE PROPERTY AND COPYRIGHT OF IDS GROUP AND SHALL NOT BE USED ON ANY OTHER PROJECT OR LOCATIONS EXCEPT AS DESCRIBED ON THE DRAWINGS, WITHOUT THE WRITTEN AGREEMENT WITH IDS GROUP.

IDS PROJECT NO.	22X099.03
IDS DRAWN BY	MJ
IDS CHECKED BY	MM
IDS APPROVED BY	JS

SHEET TITLE

ENLARGED RESTROOMS PLANS & INTERIOR ELEVATIONS

SHEET NUMBER

A-501

IDS GROUP - FILE LOCATION: C:\Users\mrahna.jsvahertan\Documents\22X099.01 LANC - El DORADO PARK (E) COMMUNITY CENTER RENOVATION_ARCH_CNTR22022_mrahna.jsvahertan.RVT
PLOT DATE: 10/29/2024 4:32:11 PM
USER: Author

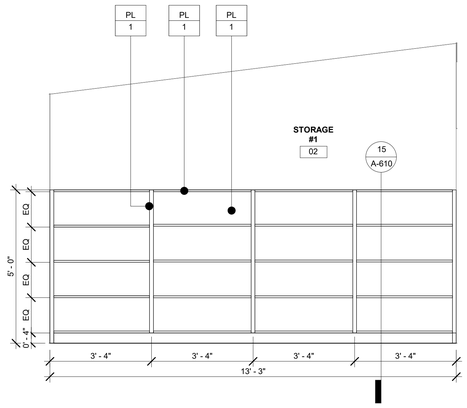

STORAGE 1 ELEVATION 02 | 1/2" = 1'-0" | 15

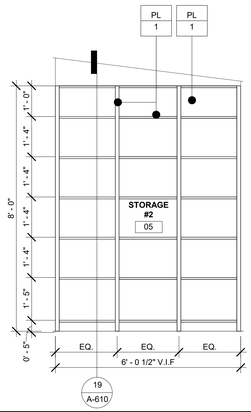

STORAGE #2 ELEVATION | 1/2" = 1'-0" | 3

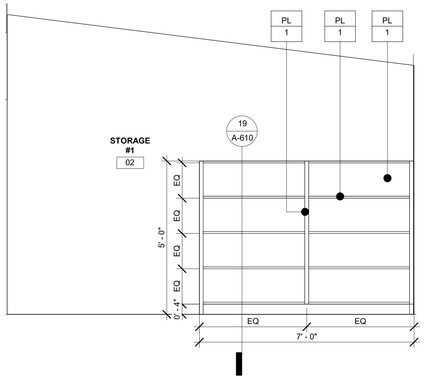

STORAGE 1 ELEVATION 01 | 1/2" = 1'-0" | 14

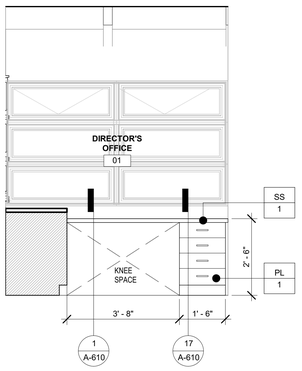

DIRECTOR'S OFFICE ELEVATION 02 | 1/2" = 1'-0" | 6

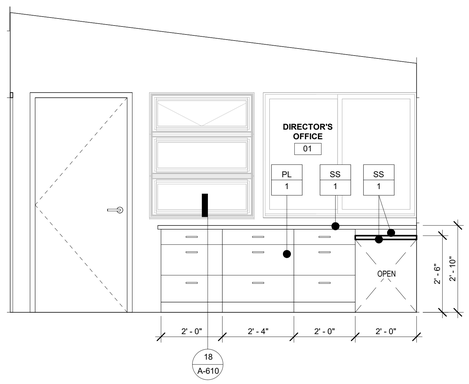

DIRECTOR'S OFFICE ELEVATION 01 | 1/2" = 1'-0" | 2

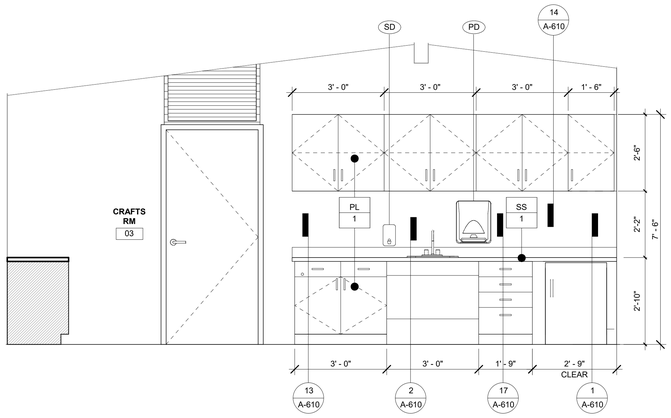

KITCHEN ELEVATION. | 1/2" = 1'-0" | 9

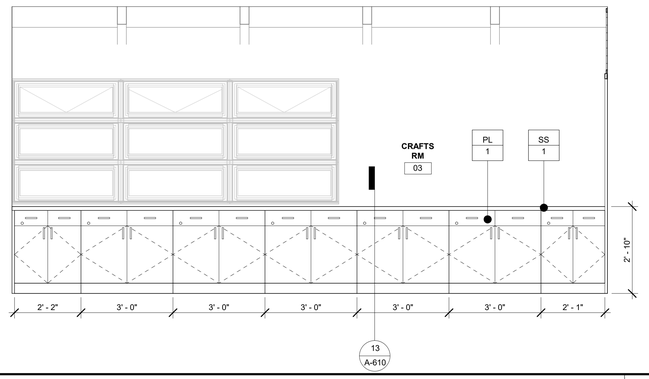

CRAFT'S ROOM ELEVATION . | 1/2" = 1'-0" | 1

SHEET NOTES

1. ALL DRAWERS AND CABINETS DOORS TO BE SOFT CLOSE/OPEN, TYP.
2. PROVIDE LOCKS ON THE CABINETS

LEGEND

PL 1	CASEWORK FINISHES TAG SYMBOL, SEE FINISH SCHEDULE
XX	ACCESSORIES TAG

ACCESSORIES SCHEDULE

TAG	DESCRIPTION
PD	ENMOTION 8" RECESSED DISPENSER – STAINLESS STEEL – 59466A
SD	WAXIE SELECT 1250ML BOTTLE 5634-01BCE00YL SOAP DISPENSER

NOTES:

FOR MOUNTING HEIGHTS, TOILET, AND TOILET ACCESSORY DETAILS REFER DETAIL 6 & 11/G-012

APPROVAL

CITY APPROVED BY:

DIRECTOR OF PUBLIC WORKS — DATE

CITY REVIEWED BY:

SENIOR ENGINEER — DATE

SUBMITTED BY:

DATE

CLIENT

LANCASTER
Creating a better tomorrow. Together.

CITY OF LANCASTER

44933 FERN AVENUE
LANCASTER, CA 93534

PROJECT NAME

SAMARITAN'S PURSE PARK FORMERLY KNOWN AS EL DORADO PARK RENOVATION

PWCP NO. 24-008

44501 5TH ST EAST
LANCASTER, CA 93535

ENGINEER/ARCHITECT

IDS

IDS GROUP

1 PETERS CANYON ROAD, SUITE 130
IRVINE, CA 92606
TEL: 949-387-8500, FAX: 949-387-0800

STAMP

REGISTERED ARCHITECT — JOSEPH SALIBA — No. 15573 — REN. 7-31-25 — STATE OF CALIFORNIA

ISSUE

REV.	DESCRIPTION	DATE
	30% CD SET	12/15/23
	60% CD SET	01/12/24
	90% CD SET	02/26/24
1	CLIENT REVISIONS	04/26/24
2	BID SET	09/10/24
3	BULLETIN #1	10/25/24
4	BULLETIN #1 R1	2/14/25
	COMPOSITE SET	9/24/25

PROJECT IDENTIFICATION

THIS DRAWING WAS CREATED IN REVIT V. 2020 UNLESS OTHERWISE NOTED.

THE ORIGINAL SIZE OF THIS SHEET IS 30" X 42"

THESE DRAWINGS AND SPECIFICATIONS ARE THE PROPERTY AND COPYRIGHT OF IDS GROUP AND SHALL NOT BE USED ON ANY OTHER PROJECT OR LOCATIONS EXCEPT AS DESCRIBED ON THE DRAWINGS, WITHOUT THE WRITTEN AGREEMENT WITH IDS GROUP.

IDS PROJECT NO.	22X099.03
IDS DRAWN BY	MJ
IDS CHECKED BY	MM
IDS APPROVED BY	JS

SHEET TITLE

INTERIOR ELEVATIONS

SHEET NUMBER

A-502

IDS GROUP - FILE LOCATION: C:\Users\marissa.javaherian\Documents\22X099.01 LANC - EL DORADO PARK (E) COMMUNITY CENTER RENOVATION_ARCH_LYY_marissa.javaherian\UNTITLED.rvt
PLOT DATE: 10/29/2024 4:32:13 PM
USER: Author

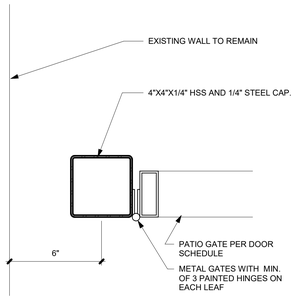

PATIO GATE - JAMB | 3" = 1'-0" | 16

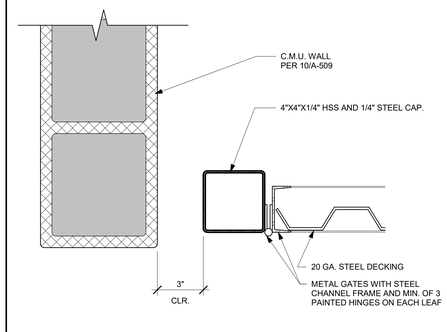

TRASH ENCLOSURE - DOOR JAMB | 3" = 1'-0" | 12

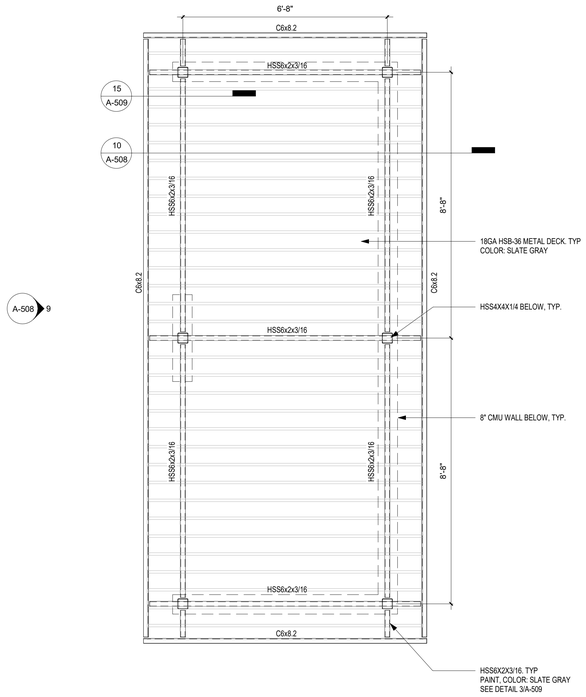

TRASH ENCLOSURE ROOF PLAN | 1/2" = 1'-0" | 3

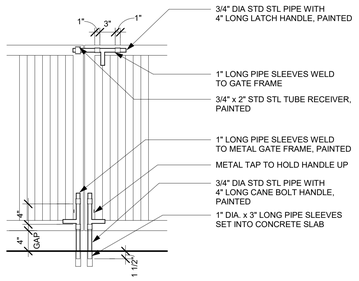

TRASH ENCLOSURE - LATCH CANE BOLT | 1" = 1'-0" | 18

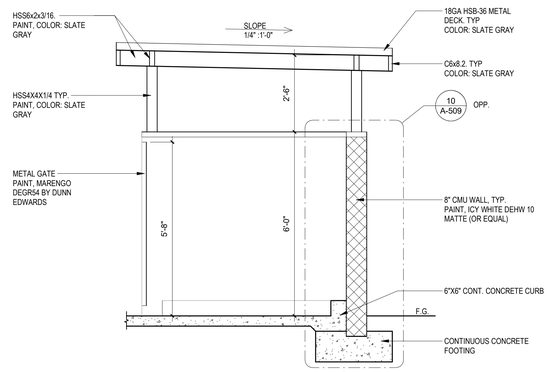

TRASH ENCLOSURE - SECTION | 1/2" = 1'-0" | 10

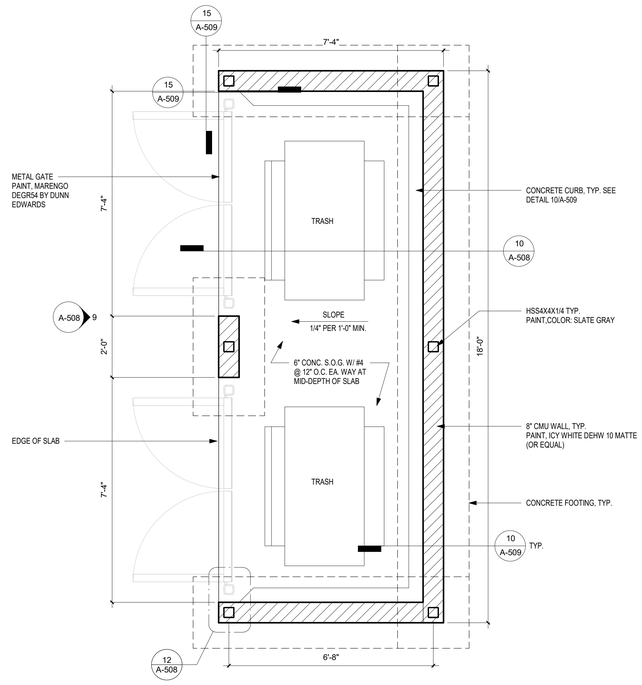

TRASH ENCLOSURE FLOOR PLAN | 1/2" = 1'-0" | 1

NOTES:

- ALL EXPOSED WELDS SHALL BE SMOOTH GRIND
- ALL JOINT WELDS SHALL BE CONTINUOUS
- MITER ALL EXPOSED JOINTS
- HIGH PERFORMANCE COATING AT ALL EXPOSED STEEL PER SPECIFICATION
- PAINT PER ARCHITECTS DIRECTION
- ALL HARDWARE TO BE CORROSION RESISTANT.
- REMOVE ALL ROUGH EDGES AT WELDS
- METAL GATES SHALL BE FACTORY PRIMED AND FIELD PAINTED
- CONTRACTOR SHALL SUBMIT SHOP DRAWINGS .

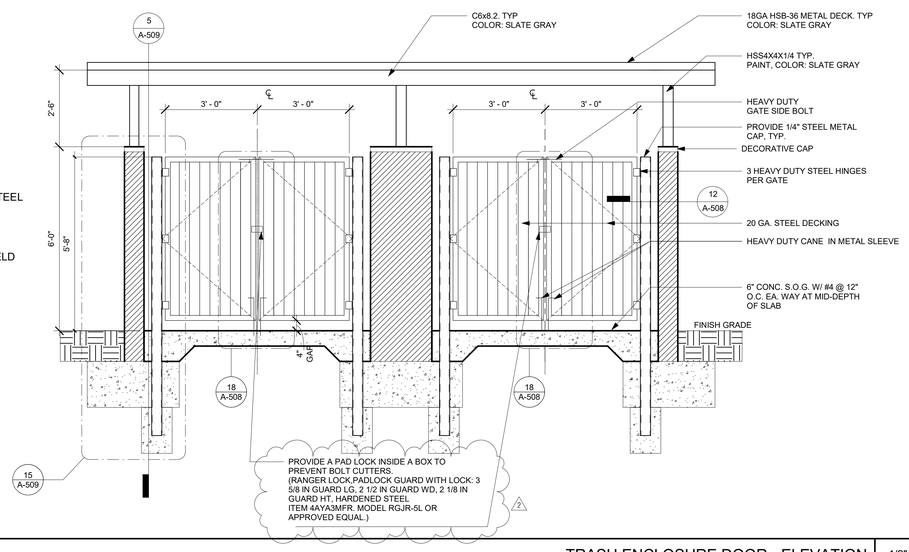

TRASH ENCLOSURE DOOR - ELEVATION | 1/2" = 1'-0" | 9

APPROVAL

CITY APPROVED BY:

DIRECTOR OF PUBLIC WORKS — DATE

CITY REVIEWED BY:

SENIOR ENGINEER — DATE

SUBMITTED BY:

DATE

CLIENT

LANCASTER
Creating a better tomorrow. Together.

CITY OF LANCASTER

44933 FERN AVENUE
LANCASTER, CA 93534

PROJECT NAME

SAMARITAN'S PURSE PARK FORMERLY KNOWN AS EL DORADO PARK RENOVATION

PWCP NO. 24-008

44501 5TH ST EAST
LANCASTER, CA 93535

ENGINEER/ARCHITECT

IDS

IDS GROUP

1 PETERS CANYON ROAD, SUITE 130
IRVINE, CA. 92606
TEL: 949-387-8500, FAX: 949-387-0800

STAMP

REGISTERED PROFESSIONAL ENGINEER — JOSEPH SUSUMU SUZUKI — No. 55573 — REN. 7-31-25 — STATE OF CALIFORNIA

ISSUE

REV.	DESCRIPTION	DATE
	30% CD SET	12/15/23
	60% CD SET	01/12/24
	90% CD SET	02/26/24
1	CLIENT REVISIONS	04/26/24
2	BID SET	09/10/24
3	BULLETIN #1	10/25/24
4	BULLETIN #1 R1	2/14/25
	COMPOSITE SET	9/24/25

PROJECT IDENTIFICATION

THIS DRAWING WAS CREATED IN REVIT V. 2020 UNLESS OTHERWISE NOTED.

THE ORIGINAL SIZE OF THIS SHEET IS 30" X 42"

THESE DRAWINGS AND SPECIFICATIONS ARE THE PROPERTY AND COPYRIGHT OF IDS GROUP AND SHALL NOT BE USED ON ANY OTHER PROJECT OR LOCATIONS EXCEPT AS DESCRIBED ON THE DRAWINGS, WITHOUT THE WRITTEN AGREEMENT WITH IDS GROUP.

IDS PROJECT NO.	22X099.03
IDS DRAWN BY	MJ
IDS CHECKED BY	MM
IDS APPROVED BY	JS

SHEET TITLE

SITE DETAILS

SHEET NUMBER

A-508

IDS GROUP - FILE LOCATION: C:\Users\mahsa.javaherian\Documents\22X099.01 LANC - EI DORADO PARK (E) COMMUNITY CENTER RENOVATION_R23_R19_R22_mahsa.javaherian@IDSGROUP.AX
PLOT DATE: 10/26/2024 4:32:14 PM
USER: Author

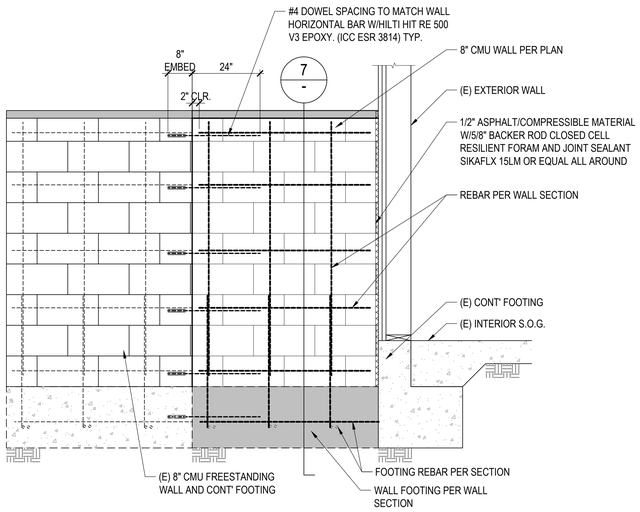

DETAIL | N.T.S | 11

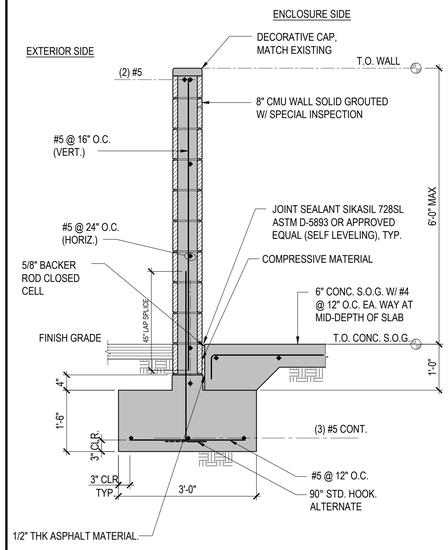

DETAIL | N.T.S | 7

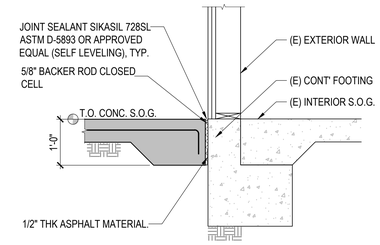

DETAIL | N.T.S | 4

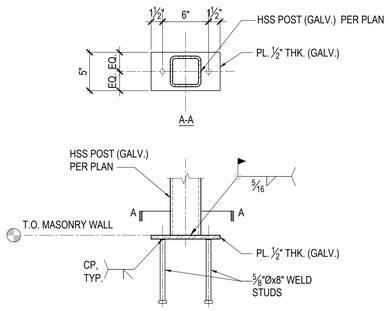

DETAIL | N.T.S | 3

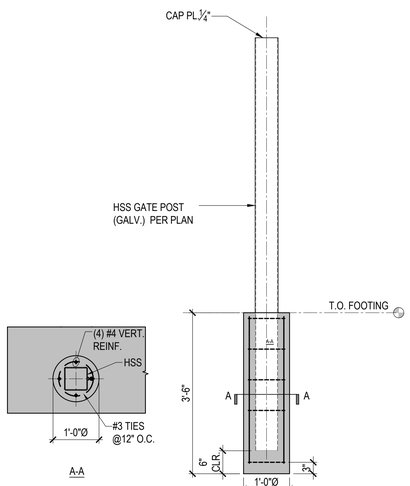

DETAIL | 3/4" : 1'-0" | 17

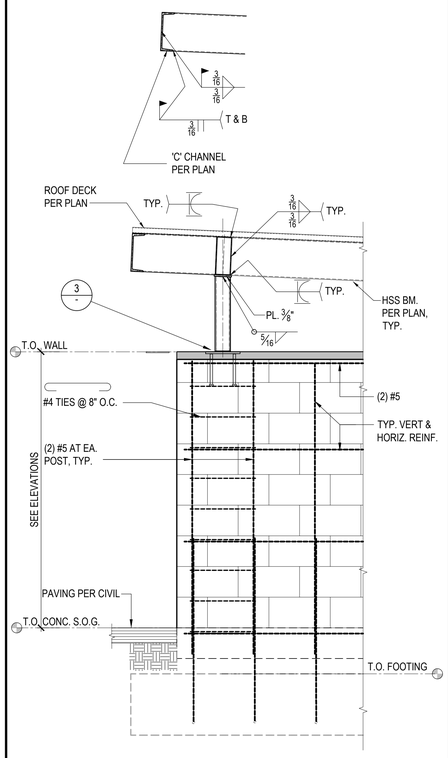

DETAIL | 3/4" : 1'-0" | 13

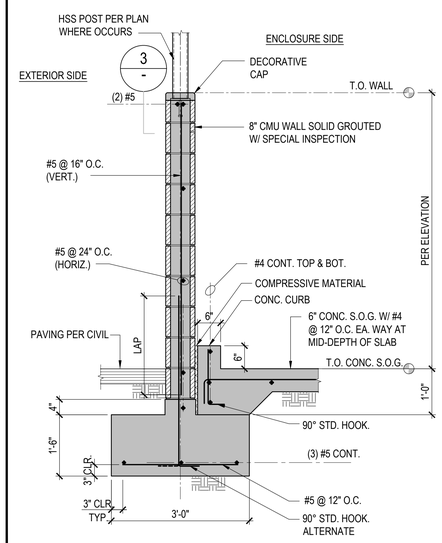

DETAIL | 3/4" : 1'-0" | 9

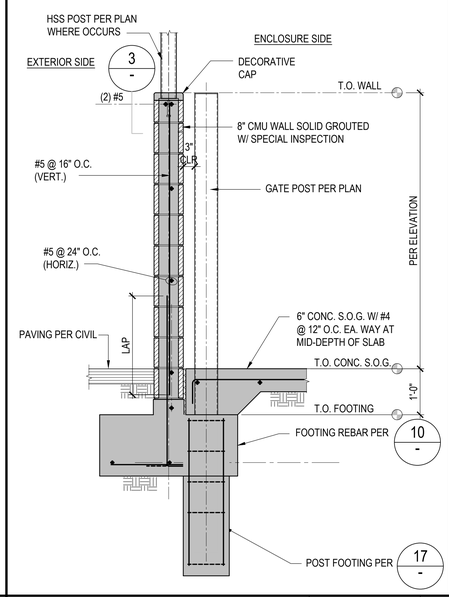

DETAIL | 3/4" : 1'-0" | 5

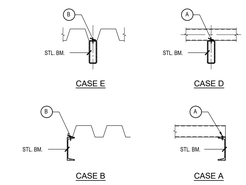

STL. DECK TYPE	STEEL DECK SCREW AND SIDE LAP SCHEDULE			
	LOCATION (A)	LOCATION (B)	LOCATION (C)	REMARKS
ROOF DECK	#¼ - 20 TEK SCREW EA. BOTTOM FLUTE (36/7) PATTERN	#¼ - 20 TEK SCREW @ 12" O.C.	VSC2 @ 12" O.C.	

NOTES:
1. SEE 12/- FOR DECK PROFILE.
2. FOR VERCO DECK LISTED, BASED ON IAPMO ER 2018.
3. FOR TEK SCREWS LISTED, BASED ON ITW BUILDEX ICC ESR-3223.

TYP. STEEL DECK CONN. | N.T.S | 2

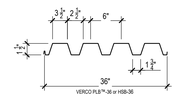

DECK GAGE	DECK WEIGHT W_{dd} (psf)	BASE METAL THICKNESS t (in.)	YIELD STRENGTH F_y (ksi)	EFFECTIVE MOMENT OF INERTIA AT SERVICE LOAD $I_e=(I_x+I_y)/2$ I_x (in^4/ft)	I_y (in^4/ft)	EFFECTIVE SECTION MODULUS AT F_y=50 ksi S_{ne} (in^3/ft)	S_{pe} (in^3/ft)	VERTICAL WEB SHEAR V_n/Ω (lb/ft)
18	2.9	0.0478	50	0.302	0.306	0.314	0.331	2181

STEEL DECK PROPERTIES | N.T.S | 1

APPROVAL

CITY APPROVED BY:

DIRECTOR OF PUBLIC WORKS — DATE

CITY REVIEWED BY:

SENIOR ENGINEER — DATE

SUBMITTED BY:

DATE

CLIENT

LANCASTER
Creating a better tomorrow. Together.

CITY OF LANCASTER

44933 FERN AVENUE
LANCASTER, CA 93534

PROJECT NAME

SAMARITAN'S PURSE PARK FORMERLY KNOWN AS EL DORADO PARK RENOVATION

PWCP NO. 24-008

44501 5th STREET EAST
LANCASTER, CA 93535

ENGINEER/ARCHITECT

IDS

IDS GROUP

1 PETERS CANYON ROAD, SUITE 130
IRVINE, CA. 92606
TEL: 949-387-8500, FAX: 949-387-0800

STAMP

LICENSED ARCHITECT JOSEPH STEPP REN. 7-31-25 STATE OF CALIFORNIA

DATE SIGNED: 02/26/2024

ISSUE

REV.	DESCRIPTION	DATE
	30% CD SET	12/15/23
	60% CD SET	01/19/24
	90% CD SET	02/26/24
1	CLIENT REVISION	04/26/24
4	BULLETIN #1 R1	2/14/25
	COMPOSITE SET	9/24/25

PROJECT IDENTIFICATION

THIS DRAWING WAS CREATED IN AUTODESK AUTOCAD V. 2021 UNLESS OTHERWISE NOTED.

THE ORIGINAL SIZE OF THIS SHEET IS 30" X 42"

THESE DRAWINGS AND SPECIFICATIONS ARE THE PROPERTY AND COPYRIGHT OF IDS GROUP AND SHALL NOT BE USED ON ANY OTHER PROJECT OR LOCATIONS EXCEPT AS DESCRIBED ON THE DRAWINGS, WITHOUT THE WRITTEN AGREEMENT WITH IDS GROUP.

IDS PROJECT NO.	22X099.01
IDS DRAWN BY	MJ
IDS CHECKED BY	MM
IDS APPROVED BY	MM

SHEET TITLE

SITE DETAILS

SHEET NUMBER

A-509

SHEET NO. OF

CUMULATIVE SHEET NO. OF

PROGRESS SET - NOT FOR CONSTRUCTION

IDS GROUP - FILE LOCATION: S:\PROJECTS\2022\SHARED\22X099.01 LANC - EL DORADO PARK\05 CAD\01 ARCH\A-509_SITE DETAILS PLOT DATE: 4/26/2024 9:07:55 AM USER: JANE.KIGUTA

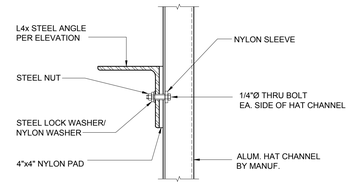

ALUMN. TO STEEL CONNECTION | N.T.S. | 12

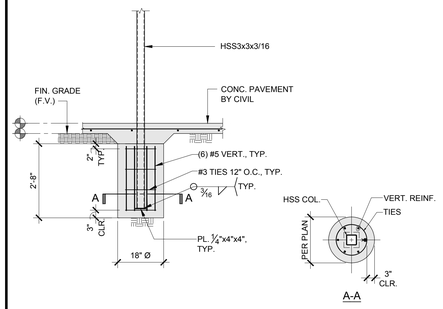

DETAIL | N.T.S. | 8

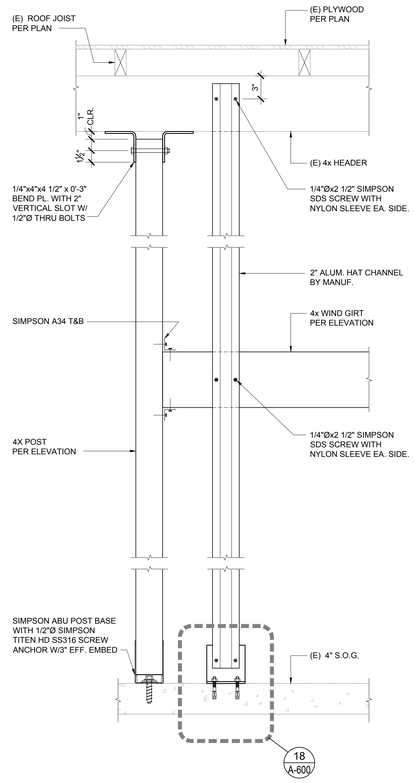

SECTION | N.T.S. | 3

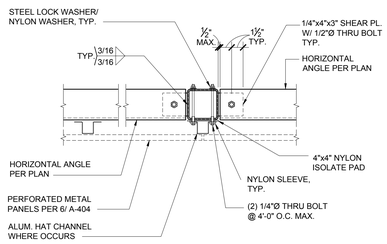

PLAN

ANGLE TO HSS POST | N.T.S. | 19

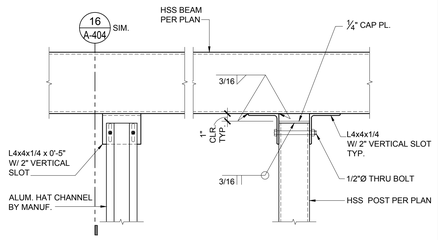

DETAIL | N.T.S. | 15

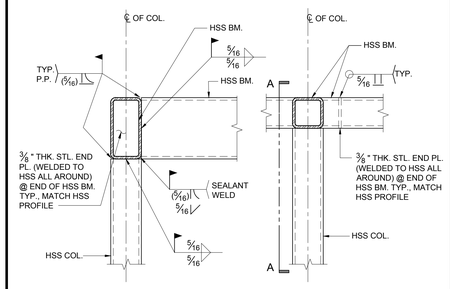

TYP. HSS BEAM AT HSS COLUMN | N.T.S. | 11

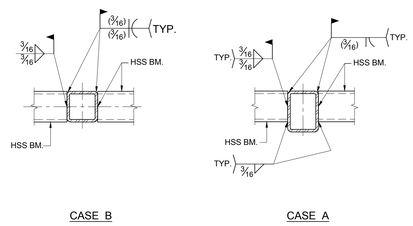

NOTE:
1. PROVIDE 3/8" THICK CLOSURE PLATE AT END OF HSS BEAMS, TYPICAL U.N.O.

TYP. HSS BEAM AT HSS BEAM | N.T.S. | 7

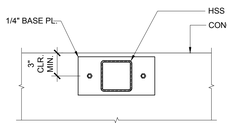

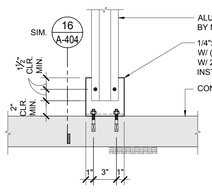

ALUMN. HAT CHANNEL TO S.O.G | N.T.S. | 18

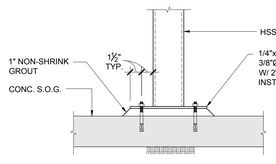

HSS POST TO S.O.G | N.T.S. | 14

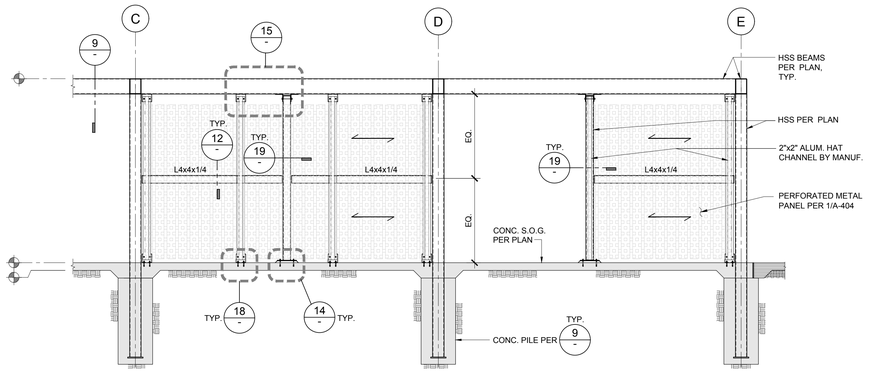

ELEVATION | N.T.S. | 13

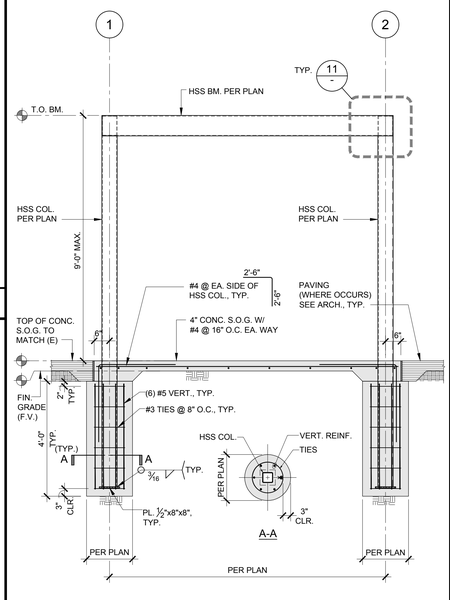

NOTES:
1. PROVIDE PLYWOOD COLLAR AROUND OPENING PRIOR TO CONCRETE POUR.
2. VIBRATE CONCRETE FOR FULL DEPTH OF FOOTING.
3. ALL STEEL, HARDWARE AND ACCESSORIES SHALL BE HOT-DIP GALVANIZED AND THEN PAINTED PER ARCHITECTURAL DRAWINGS, TYPICAL.
4. REPAIR GALVANIZING AT FIELD WELDS WITH CARBOLINE CARBOMASTIC REPAIR PAINT (10 MILS), TYPICAL.

CANOPY SECTION | N.T.S. | 9

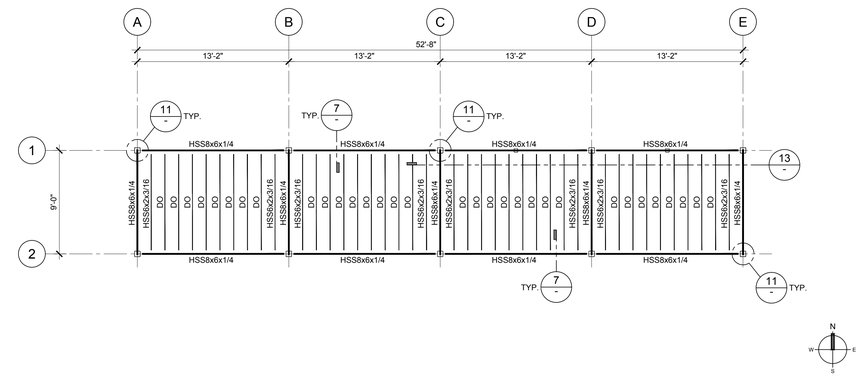

CANOPY FRAMING PLAN | 3/16"=1'-0" | 2

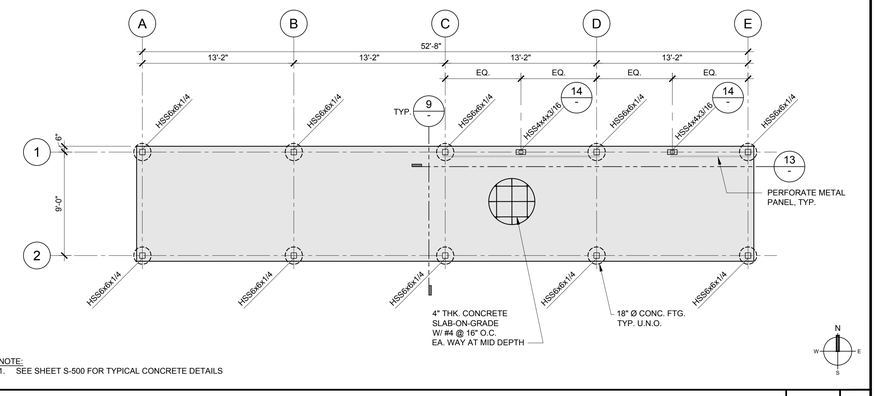

NOTE:
1. SEE SHEET S-500 FOR TYPICAL CONCRETE DETAILS

CANOPY FOUNDATION PLAN | 3/16"=1'-0" | 1

APPROVAL

CITY APPROVED BY:

DIRECTOR OF PUBLIC WORKS — DATE

CITY REVIEWED BY:

SENIOR ENGINEER — DATE

SUBMITTED BY:

DATE

CLIENT

LANCASTER
Creating a better tomorrow. Together.

CITY OF LANCASTER
44933 FERN AVENUE
LANCASTER, CA 93534

PROJECT NAME

EL DORADO PARK RENOVATION

PWCP NO. 24-008

44501 5th STREET EAST
LANCASTER, CA 93534

ENGINEER/ARCHITECT

IDS

IDS GROUP
1 PETERS CANYON ROAD, SUITE 130
IRVINE, CA. 92606
TEL: 949-387-8500, FAX: 949-387-0800

STAMP

ISSUE

REV.	DESCRIPTION	DATE
	30% CD SET	12/15/23
	60% CD SET	01/12/24
	90% CD SET	02/26/24
4	BULLETIN #1 R1	2/14/25
	COMPOSITE SET	9/24/25

PROJECT IDENTIFICATION

THIS DRAWING WAS CREATED IN AUTODESK AUTOCAD V. 2021 UNLESS OTHERWISE NOTED.

THE ORIGINAL SIZE OF THIS SHEET IS 30" X 42"

THESE DRAWINGS AND SPECIFICATIONS ARE THE PROPERTY AND COPYRIGHT OF IDS GROUP AND SHALL NOT BE USED ON ANY OTHER PROJECT OR LOCATIONS EXCEPT AS DESCRIBED ON THE DRAWINGS, WITHOUT THE WRITTEN AGREEMENT WITH IDS GROUP.

IDS PROJECT NO.	22X099.01
IDS DRAWN BY	CN
IDS CHECKED BY	VM
IDS APPROVED BY	SH

SHEET TITLE

CANOPY PLANS, SECTIONS AND DETAILS

SHEET NUMBER

A-600

IDS GROUP - FILE LOCATION: S:\PROJECTS\2022\SHARED\22X099.01 LANC - EL DORADO PARK\05 CAD\03 STRUCA-600 PLOT DATE: 2/26/2024 11:09:57 AM USER: CALI.NGUYEN

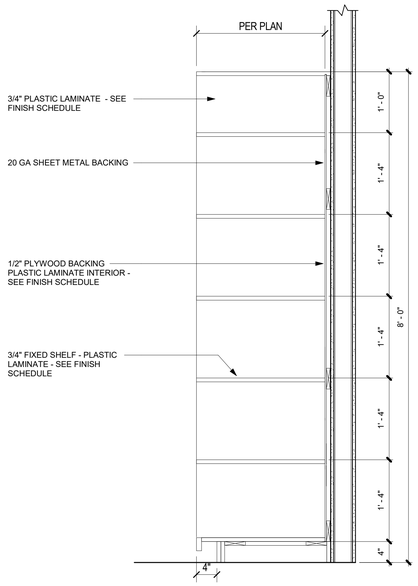

STORAGE SHELVES #02 | 1" = 1'-0" | 19

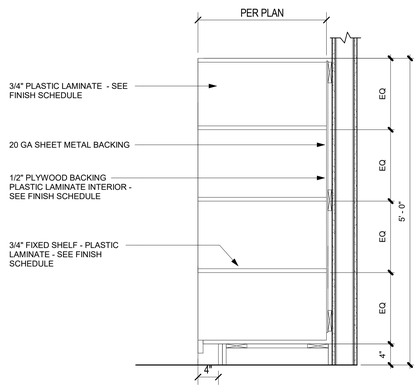

STORAGE SHELVES #01 | 1" = 1'-0" | 15

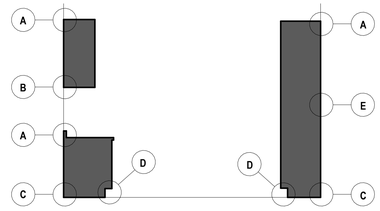

TYPICAL CABINET SECTIONS

NOTE: ALL CABINETS (WITH THE EXCEPTION OF PORTABLE CABINETS) SHALL BE SECURELY ATTACHED TO THE STRUCTURAL FRAMING PER BELOW DETAILS

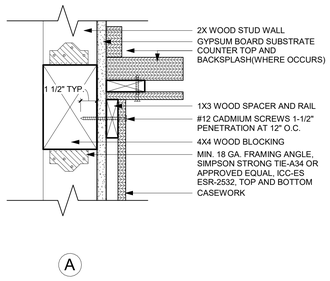

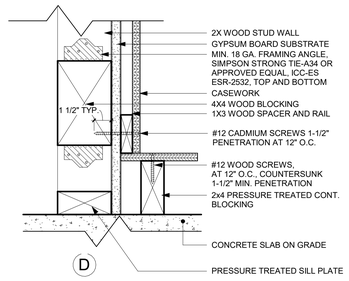

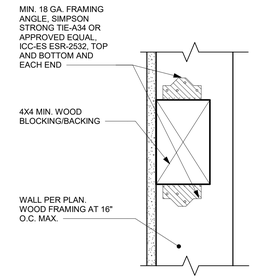

WOOD BACKING | 3" = 1'-0" | 3

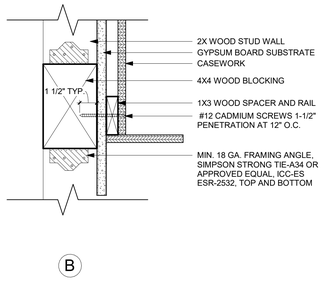

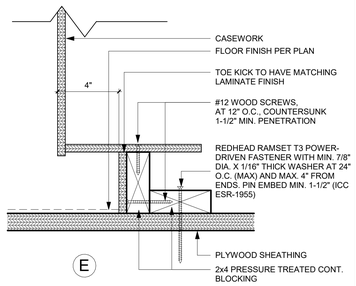

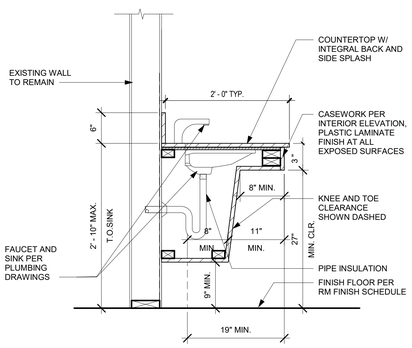

SINK COUNTER SECTION | 1" = 1'-0" | 2

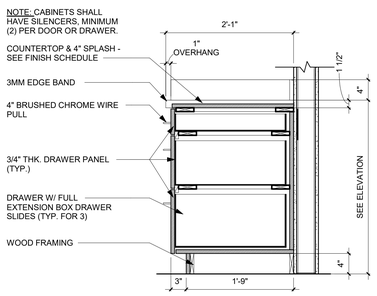

BASE CABINET W/ 3 DRAWERS | 1" = 1'-0" | 18

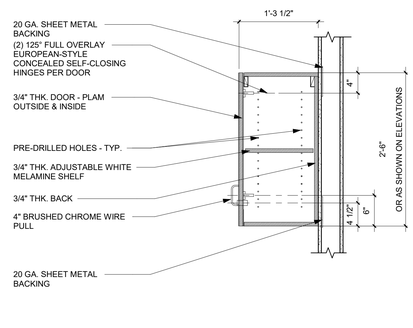

UPPER CABINET | 1" = 1'-0" | 14

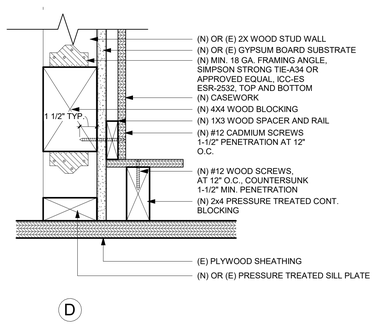

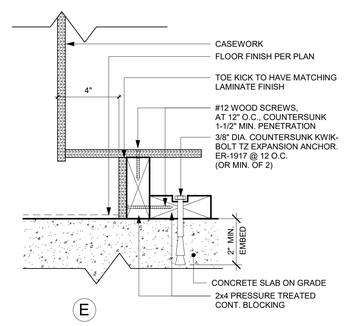

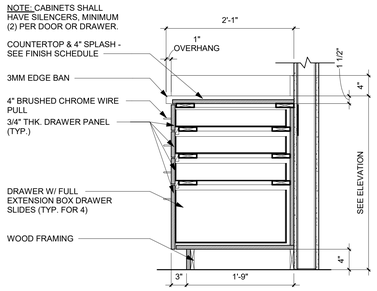

BASE CABINET W/ 4 DRAWERS | 1" = 1'-0" | 17

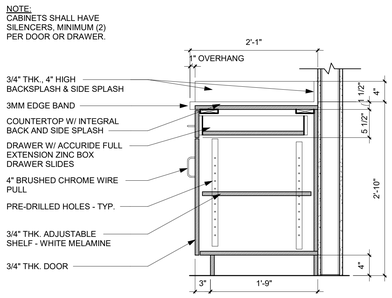

BASE CABINET | 1" = 1'-0" | 13

CASEWORK ASSEMBLY NOTES:

1. UPPER CABINET WIDTH TO ALIGN WITH CORRESPONDING BASE WIDTH UNLESS DESIGNATED OTHERWISE
2. CABINET WIDTHS TO BE BASED ON MODULE INCREMENTS OF 3" THROUGH 24" WIDE CABINETS AND 6" INCREMENTS FOR 24" WIDE THROUGH 48" WIDE CABINETS UNLESS DESIGNATED OTHERWISE.
3. 3" MAX WIDTH FILLER PANELS WILL BE PROVIDED TO FINISH OUT CABINETS TO WALLS WHERE PLAN DIMENSIONS DICTATE.
4. PROVIDE FINISHED END PANELS AND/OR END RETURNS AT OPEN ENDED CASEWORK.
5. PROVIDE WALL BRACKET SUPPORTS AT 48" O.C. MAX. FOR CONTINUOUS KNEE SPACE.
6. PROVIDE LIGHT VALANCEAT ALL TASK LIGHTING LOCATION, REFER TO ELECTRICAL.
7. PROVIDE COUNTERTOPS OVER ALL BASE CABINETS AND KNEE SPACE APRONS.
8. PROVIDE ADJUSTABLE SHELVES AS INDICATED ON ELEVATIONS
9. CASEWORK MANUFACTURER TO PROVIDE TRIM AND FILLER PANELS WHERE EQUIPMENT IS LOCATED WITHIN CASEWORK UNITS.
10. PROVIDE DOOR AND DRAWER PULLS AS INDICATED ON ELEVATIONS.
11. FULL HEIGHT CABINETS TO PROVIDED WITH FILLER AT TOP TO FLUSH WITH ADJACENT SUSPENDED WALL CABINETS OR CLOSE OFF TOP OF CABINET FURRDOWN.
12. PROVIDE ENDSPLASH WHEN COUNTERTOP IS ADJACENT TO WALLS AT SIDES.
13. ALL CABINET FINISH TO BE PL-01 U.N.O
14. PROVIDE GROMMETS AT ALL COUNTERTOPS, FOR EQUIPT CABLING, VERIFY LOCATIONS W/ OWNER AND COORDINATE WITH EQUIP. LAYOUTS
15. PROVIDE PLASTIC LAMINATE FILLERS/SOFFITS FOR ALLUPPER CABINETS- REFER TO INTERIOR ELEVATIONS.

TYPICAL CABINET ANCHORAGE DETAILS AND NOTES | 3" = 1'-0" | 5

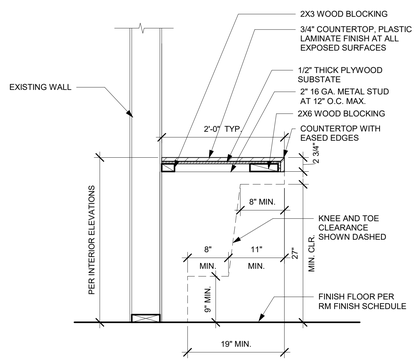

COUNTER SECTION | 1" = 1'-0" | 1

APPROVAL

CITY APPROVED BY:

DIRECTOR OF PUBLIC WORKS — DATE

CITY REVIEWED BY:

SENIOR ENGINEER — DATE

SUBMITTED BY:

DATE

CLIENT

LANCASTER
Creating a better tomorrow. Together.

CITY OF LANCASTER

44933 FERN AVENUE
LANCASTER, CA 93534

PROJECT NAME

SAMARITAN'S PURSE PARK FORMERLY KNOWN AS EL DORADO PARK RENOVATION

PWCP NO. 24-008

44501 5TH ST EAST
LANCASTER, CA 93535

ENGINEER/ARCHITECT

IDS

IDS GROUP

1 PETERS CANYON ROAD, SUITE 130
IRVINE, CA. 92606
TEL: 949-387-8500, FAX: 949-387-0800

STAMP

REGISTERED ARCHITECT — JOSEPH J. PILBERA — No. C-15573 — REN. 7-31-25 — STATE OF CALIFORNIA

ISSUE			
REV.	DESCRIPTION		DATE
	30% CD SET		12/15/23
	60% CD SET		01/12/24
	90% CD SET		02/26/24
1	CLIENT REVISIONS		04/26/24
2	BID SET		09/10/24
3	BULLETIN #1		10/25/24
4	BULLETIN #1 R1		2/14/25
	COMPOSITE SET		9/24/25

PROJECT IDENTIFICATION

THIS DRAWING WAS CREATED IN REVIT V. 2020 UNLESS OTHERWISE NOTED.

THE ORIGINAL SIZE OF THIS SHEET IS 30" X 42"

THESE DRAWINGS AND SPECIFICATIONS ARE THE PROPERTY AND COPYRIGHT OF IDS GROUP AND SHALL NOT BE USED ON ANY OTHER PROJECT OR LOCATIONS EXCEPT AS DESCRIBED ON THE DRAWINGS, WITHOUT THE WRITTEN AGREEMENT WITH IDS GROUP.

IDS PROJECT NO.	22X099.03
IDS DRAWN BY	MJ
IDS CHECKED BY	MM
IDS APPROVED BY	JS

SHEET TITLE

DETAILS - CASEWORK

SHEET NUMBER

A-610

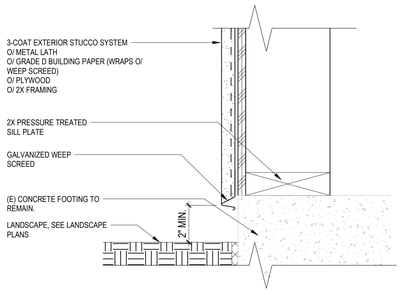

SECTION

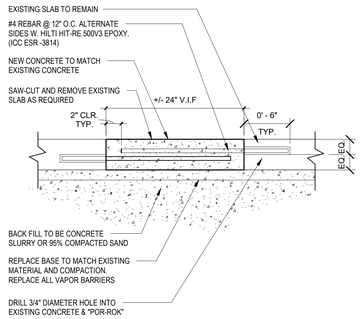

SAW CUT SLAB REPAIR | 1 1/2" = 1'-0" | 8

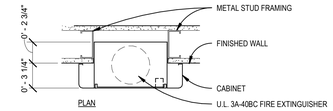

PLAN

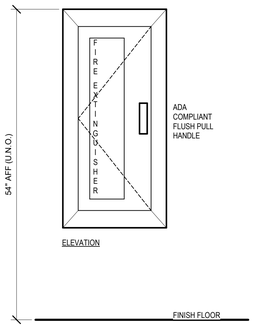

ELEVATION

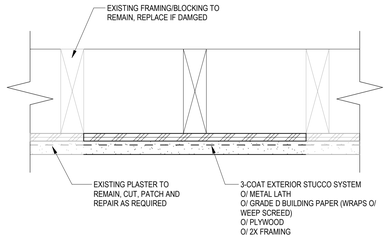

PLAN

PLASTER INFILL WALL DETAIL | 3" = 1'-0" | 11

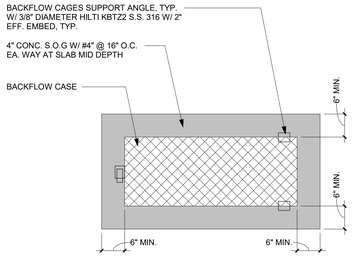

BACKFLOW PREVENTOR CAGE | 1 1/2" = 1'-0" | 7

NOTES:
1. MOUNT FIRE EXTINGUISHER CABINET SO THAT THE HIGHEST OPERATING PART OF THE CABINET IS 54" A.F.F. MAX.
2. FIRE EXTINGUISHER CABINET VERIFY ROUGH OPENING IN THE FIELD

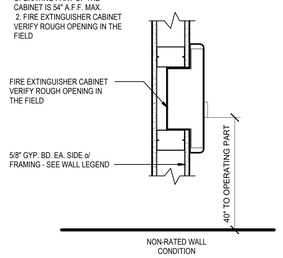

FIRE EXTINGUISHER CABINET | 1 1/2" = 1'-0" | 3

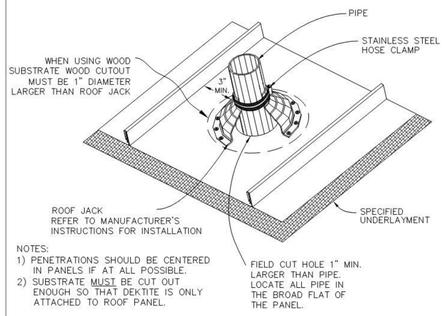

NOTES:
1) PENETRATIONS SHOULD BE CENTERED IN PANELS IF AT ALL POSSIBLE.
2) SUBSTRATE MUST BE CUT OUT ENOUGH SO THAT DEKTITE IS ONLY ATTACHED TO ROOF PANEL.

ROOF JACK | 1 1/2" = 1'-0" | 14

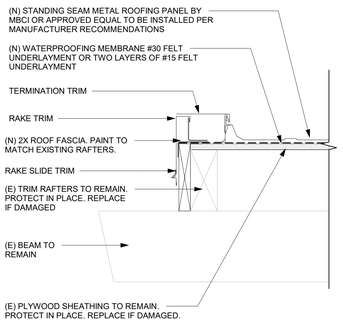

ROOF RAKE DETAIL | 1 1/2" = 1'-0" | 10

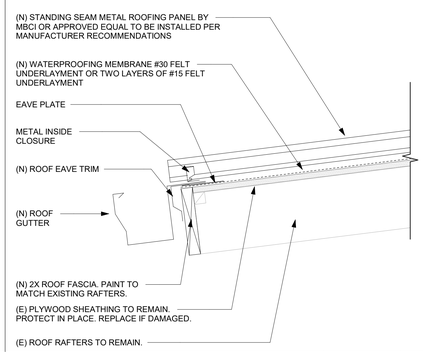

ROOF EAVE DETAIL | 1 1/2" = 1'-0" | 6

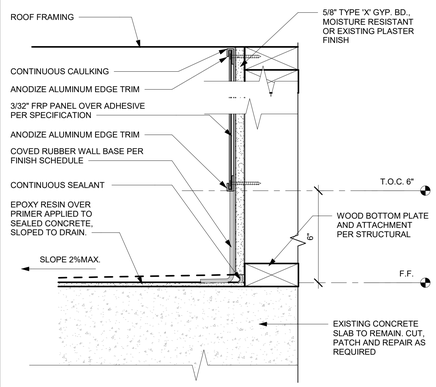

FRP PANEL AT PUBLIC RESTROOM WALL | 3" = 1'-0" | 2

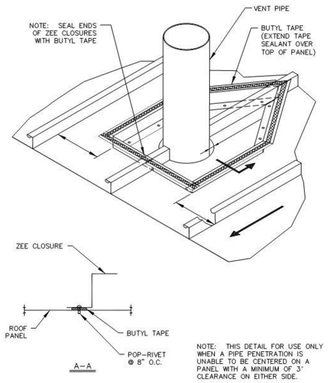

NOTE: THIS DETAIL FOR USE ONLY WHEN A PIPE PENETRATION IS UNABLE TO BE CENTERED ON A PANEL WITH A MINIMUM OF 3" CLEARANCE ON EITHER SIDE.

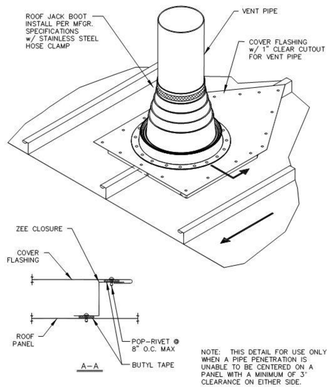

NOTE: THIS DETAIL FOR USE ONLY WHEN A PIPE PENETRATION IS UNABLE TO BE CENTERED ON A PANEL WITH A MINIMUM OF 3" CLEARANCE ON EITHER SIDE.

PIPE PENETRATION @ SLOPED ROOF | 1 1/2" = 1'-0" | 13

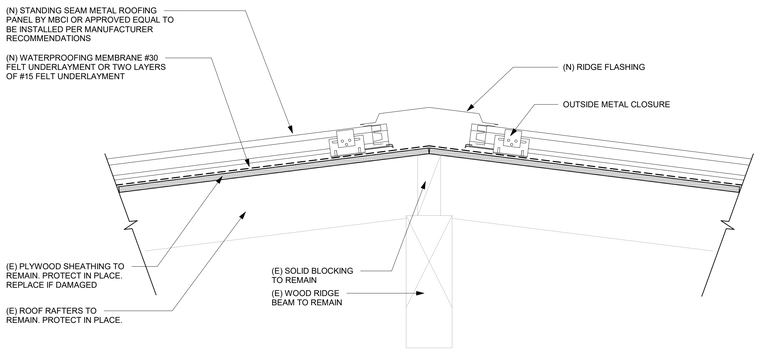

ROOF RIDGE DETAIL | 1 1/2" = 1'-0" | 5

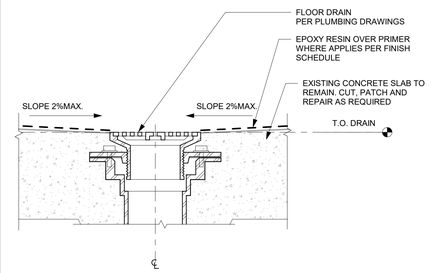

NOTE:
PROVIDE TRAP PRIMER

FLOOR DRAIN AT SEALED CONCRETE | 3" = 1'-0" | 1

APPROVAL

CITY APPROVED BY:

DIRECTOR OF PUBLIC WORKS — DATE

CITY REVIEWED BY:

SENIOR ENGINEER — DATE

SUBMITTED BY:

DATE

CLIENT

LANCASTER
Creating a better tomorrow. Together.

CITY OF LANCASTER

44933 FERN AVENUE
LANCASTER, CA 93534

PROJECT NAME

SAMARITAN'S PURSE PARK FORMERLY KNOWN AS EL DORADO PARK RENOVATION

PWCP NO. 24-008

44501 5TH ST EAST
LANCASTER, CA 93535

ENGINEER/ARCHITECT

IDS

IDS GROUP

1 PETERS CANYON ROAD, SUITE 130
IRVINE, CA. 92606
TEL: 949-387-8500, FAX: 949-387-0800
S162728-19-00-ACD0024

STAMP

REGISTERED PROFESSIONAL ENGINEER
JOSEPH SILVERIO
No. C-55573
REN. 7-31-25
STATE OF CALIFORNIA

ISSUE

REV.	DESCRIPTION	DATE
	30% CD SET	12/15/23
	60% CD SET	01/12/24
	90% CD SET	02/26/24
1	CLIENT REVISIONS	04/26/24
2	BID SET	09/10/24
3	BULLETIN #1	10/25/24
4	BULLETIN #1 R1	2/14/25
	COMPOSITE SET	9/24/25

PROJECT IDENTIFICATION

THIS DRAWING WAS CREATED IN REVIT V. 2020 UNLESS OTHERWISE NOTED.

THE ORIGINAL SIZE OF THIS SHEET IS 30" X 42"

THESE DRAWINGS AND SPECIFICATIONS ARE THE PROPERTY AND COPYRIGHT OF IDS GROUP AND SHALL NOT BE USED ON ANY OTHER PROJECT OR LOCATIONS EXCEPT AS DESCRIBED ON THE DRAWINGS, WITHOUT THE WRITTEN AGREEMENT WITH IDS GROUP.

IDS PROJECT NO.	22X099.03
IDS DRAWN BY	MJ
IDS CHECKED BY	MM
IDS APPROVED BY	JS

SHEET TITLE

DETAILS - MISCELLANEOUS

SHEET NUMBER

A-734

USER: CKC
PLOT DATE: 10/29/2024 4:32:17 PM
IDS GROUP - FILE LOCATION: C:\Users\mathias.jauhiainen\Documents\22X099.01 LANC - El DORADO PARK (E) COMMUNITY CENTER RENOVATION_ARCH_CNTR22X099_mathias.jauhiainen.rvt

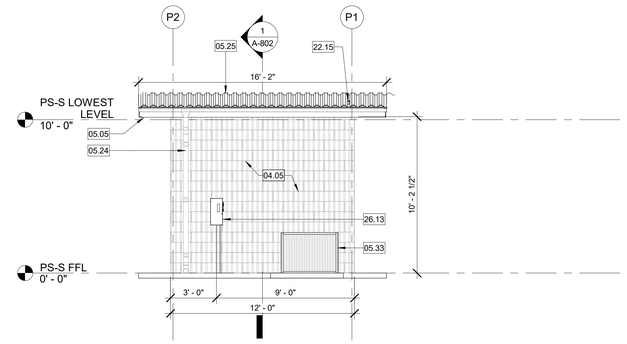

WEST ELEVATION | 1/4" = 1'-0" | 5

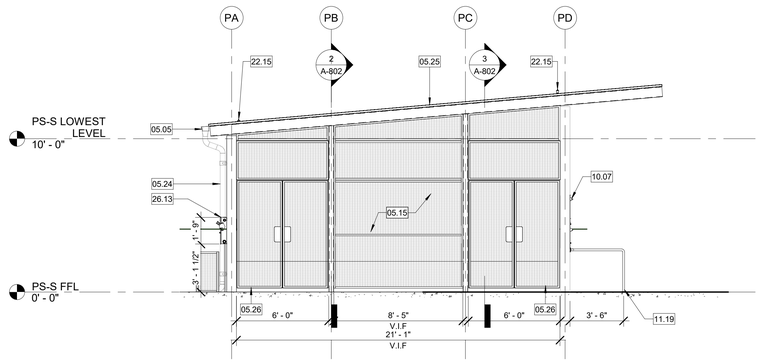

SOUTH ELEVATION | 1/4" = 1'-0" | 7

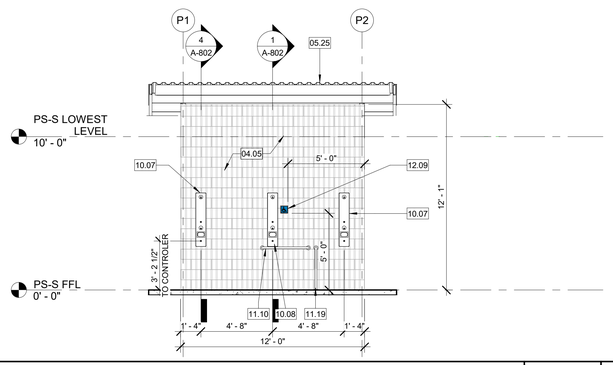

EAST ELEVATION | 1/4" = 1'-0" | 4

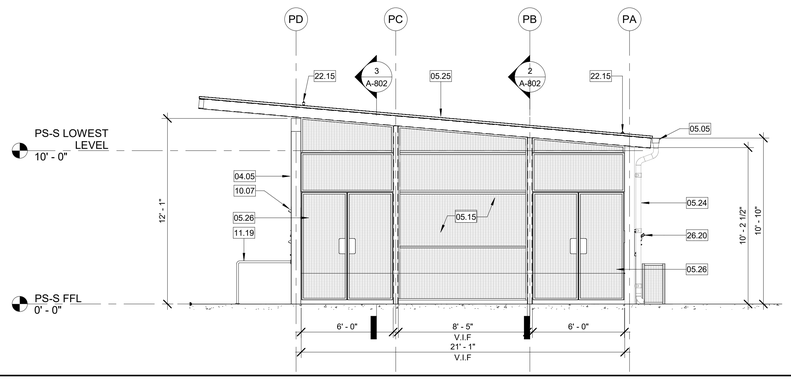

NORTH ELEVATION | 1/4" = 1'-0" | 6

KEYNOTE

NO.	DESCRIPTION
04.05	8" VERTICAL SCORED BLOCK
05.05	METAL GUTTER
05.15	WIRE PANEL
05.24	ROOF DRAIN DOWN SPOUT
05.25	CORRUGATED METAL ROOF DECK
05.26	WIRE DOUBLE HINGED DOOR
05.27	4X4X1/2 HSS COLUMN
05.33	BACK FLOW PREVENTOR PROTECTIVE METAL CAGE BY STRONG BOX, MODEL: BC-45CR OR APROVED EQUAL OVER CONCRETE SLAB. SEE DETAIL 7/A-734
10.07	RECESSED WALL-MOUNTED SHOWER EQUIPMENT, SEE PLUMBING
10.08	ADA RECESSED WALL-MOUNTED SHOWER EQUIPMENT, SEE PLUMBING
11.10	GRAB BAR
11.19	FLOOR-MOUNTED GRAB BAR
11.20	CHEMICAL TANKS, PER MANUFACTURE
11.21	MANIFOLD MODULE, PER MANUFACTURE
11.23	PURIFY MODULE REACTOR, PER MANUFACTURE
11.24	SINGLE LOOP MODULE SKID 1, PER MANUFACTURE
11.25	SINGLE LOOP MODULE SKID 2, PER MANUFACTURE
11.26	PURIFY MODULE CONTROLLER, PER MANUFACTURE
12.09	5"x 5" ADA SIGN
22.13	TRENCH DRAIN, SEE PLUMBING
22.15	AIR VENT THROUGH ROOF
22.17	HOSE BIB, SEE PLUMBING
22.19	EMERGENCY EYEWASH STATION, SEE PLUMBING
26.13	SAFETY DISCONNECT SWITCH, PER ELECTRICAL
26.15	10"x10" SURFACE-MOUNTED LIGHT FIXTURE, PER ELECTRICAL
26.18	JUNCTION BOX WITH DEBRIS TRAP TRAY, PER MANUFACTURE
26.19	LIGHT SWITCH
26.20	ELECTRICAL PANEL, PER ELECTRICAL

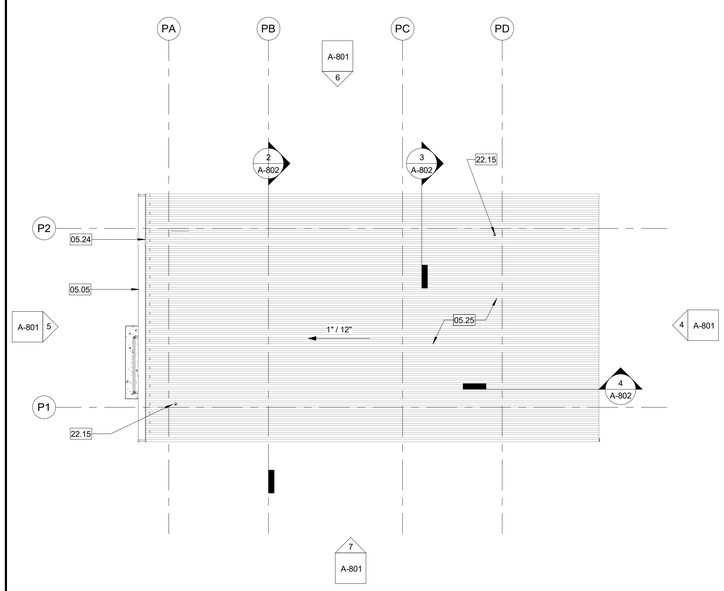

PUMP STATION - ROOF PLAN | 1/4" = 1'-0" | 3

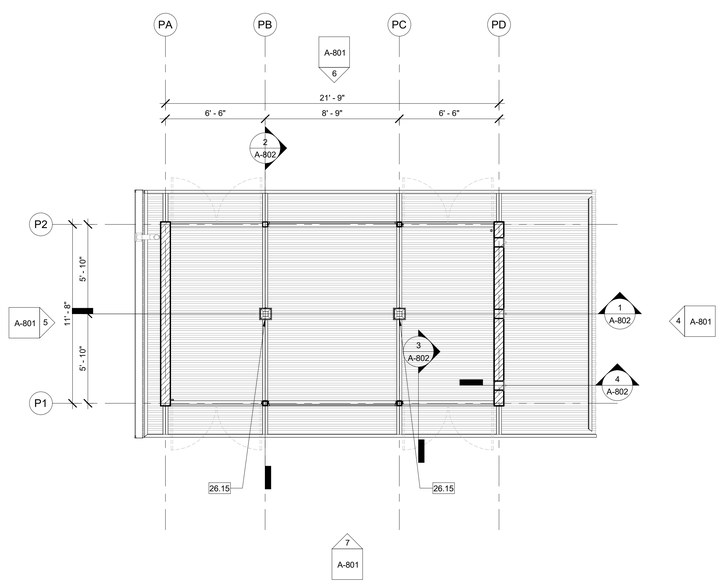

REFLECTED CEILING PLAN | 1/4" = 1'-0" | 2

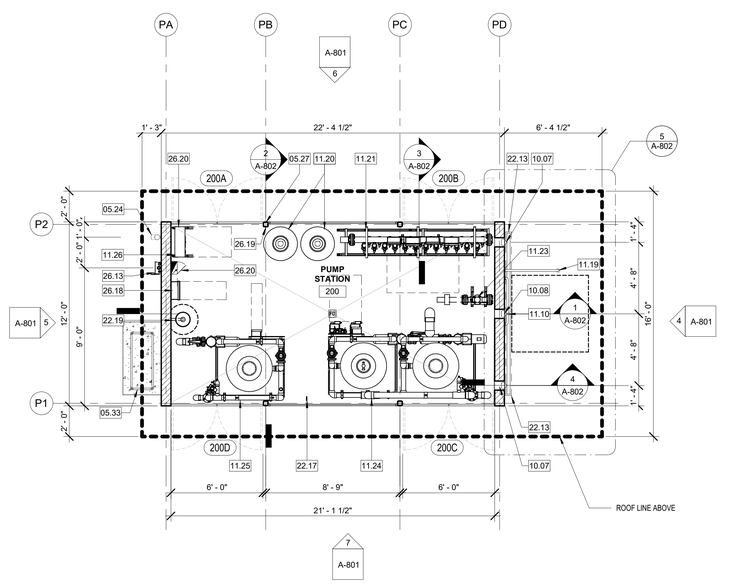

FLOOR PLAN | 1/4" = 1'-0" | 1

APPROVAL

CITY APPROVED BY:

DIRECTOR OF PUBLIC WORKS — DATE

CITY REVIEWED BY:

SENIOR ENGINEER — DATE

SUBMITTED BY:

DATE

CLIENT

LANCASTER

Creating a better tomorrow. Together.

CITY OF LANCASTER

44933 FERN AVENUE
LANCASTER, CA 93534

PROJECT NAME

SAMARITAN'S PURSE PARK FORMERLY KNOWN AS EL DORADO PARK RENOVATION

PWCP NO. 24-008

44501 5TH ST EAST
LANCASTER, CA 93535

ENGINEER/ARCHITECT

IDS

IDS GROUP

1 PETERS CANYON ROAD, SUITE 130
IRVINE, CA. 92606
TEL: 949-387-8500, FAX: 949-387-0800

STAMP

REGISTERED ARCHITECT — JOSEPH SILBERG — No. C-15573 — REN. 7-31-25 — STATE OF CALIFORNIA

ISSUE

REV.	DESCRIPTION	DATE
	30% CD SET	12/15/23
	60% CD SET	01/12/24
	90% CD SET	02/26/24
1	CLIENT REVISIONS	04/26/24
4	BULLETIN #1 R1	2/14/25
	COMPOSITE SET	9/24/25

PROJECT IDENTIFICATION

THIS DRAWING WAS CREATED IN REVIT V. 2020 UNLESS OTHERWISE NOTED.

THE ORIGINAL SIZE OF THIS SHEET IS 30" X 42"

THESE DRAWINGS AND SPECIFICATIONS ARE THE PROPERTY AND COPYRIGHT OF IDS GROUP AND SHALL NOT BE USED ON ANY OTHER PROJECT OR LOCATIONS EXCEPT AS DESCRIBED ON THE DRAWINGS, WITHOUT THE WRITTEN AGREEMENT WITH IDS GROUP.

IDS PROJECT NO.	22X099.03
IDS DRAWN BY	MJ
IDS CHECKED BY	MM
IDS APPROVED BY	JS

SHEET TITLE

PUMP STATION - PLANS & ELEVATIONS

SHEET NUMBER

A-801

IDS GROUP - FILE LOCATION: C:\Users\jane.kiguta\Documents\22X099.01_ Pump Station_REVIT20_Jane.Kiguta.rvt
PLOT DATE: 4/25/2024 1:28:44 PM
USER: Author

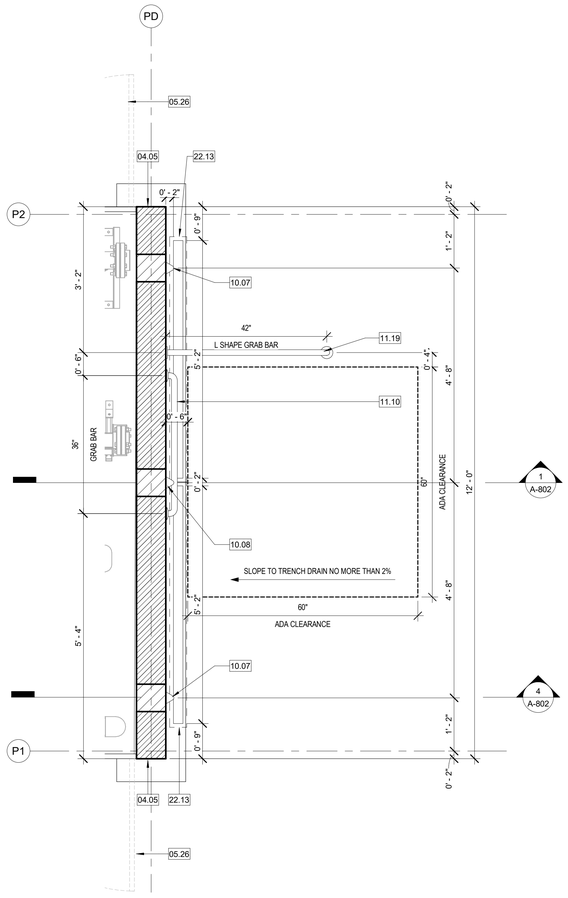

ENLARGED OUTDOOR SHOWERS | 3/4" = 1'-0" | 5

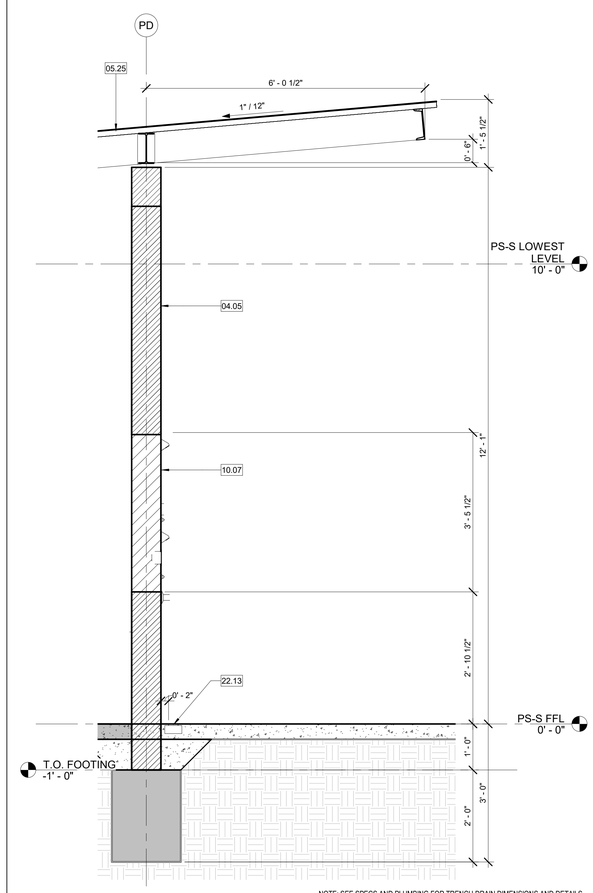

NOTE: SEE SPECS AND PLUMBING FOR TRENCH DRAIN DIMENSIONS AND DETAILS

WALL SECTION | 3/4" = 1'-0" | 4

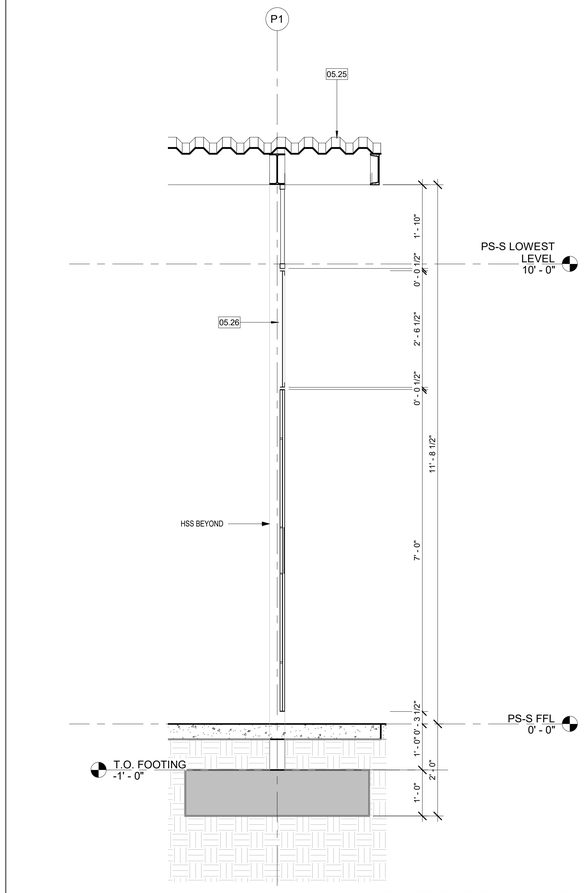

NOTE: SEE SPECS FOR WIRE DOOR DIMENSIONS AND DETAILS

WALL SECTION - 1 | 3/4" = 1'-0" | 3

NO.	DESCRIPTION
04.05	8" VERTICAL SCORED BLOCK
05.05	METAL GUTTER
05.15	WIRE PANEL
05.24	ROOF DRAIN DOWN SPOUT
05.25	CORRUGATED METAL ROOF DECK
05.26	WIRE DOUBLE HINGED DOOR
05.27	4X4X1/2 HSS COLUMN
10.07	RECESSED WALL-MOUNTED SHOWER EQUIPMENT, SEE PLUMBING
10.08	ADA RECESSED WALL-MOUNTED SHOWER EQUIPMENT, SEE PLUMBING
11.10	GRAB BAR
11.19	FLOOR-MOUNTED GRAB BAR
22.13	TRENCH DRAIN, SEE PLUMBING
22.15	AIR VENT THROUGH ROOF
22.17	HOSE BIB, SEE PLUMBING
26.13	SAFETY DISCONNECT SWITCH, PER ELECTRICAL
26.15	10"x10" SURFACE-MOUNTED LIGHT FIXTURE, PER ELECTRICAL
26.19	LIGHT SWITCH

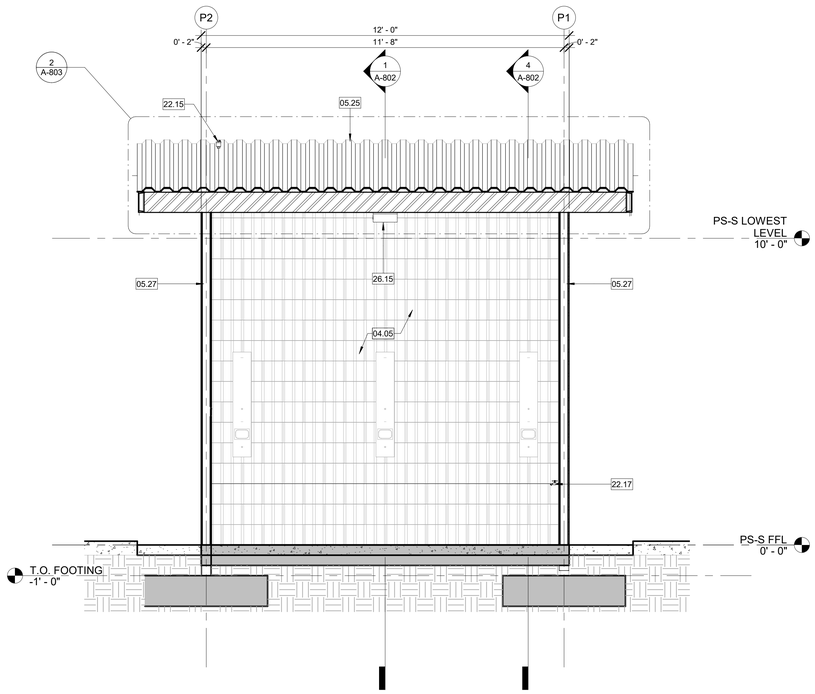

BUILDING CROSS SECTION | 1/2" = 1'-0" | 2

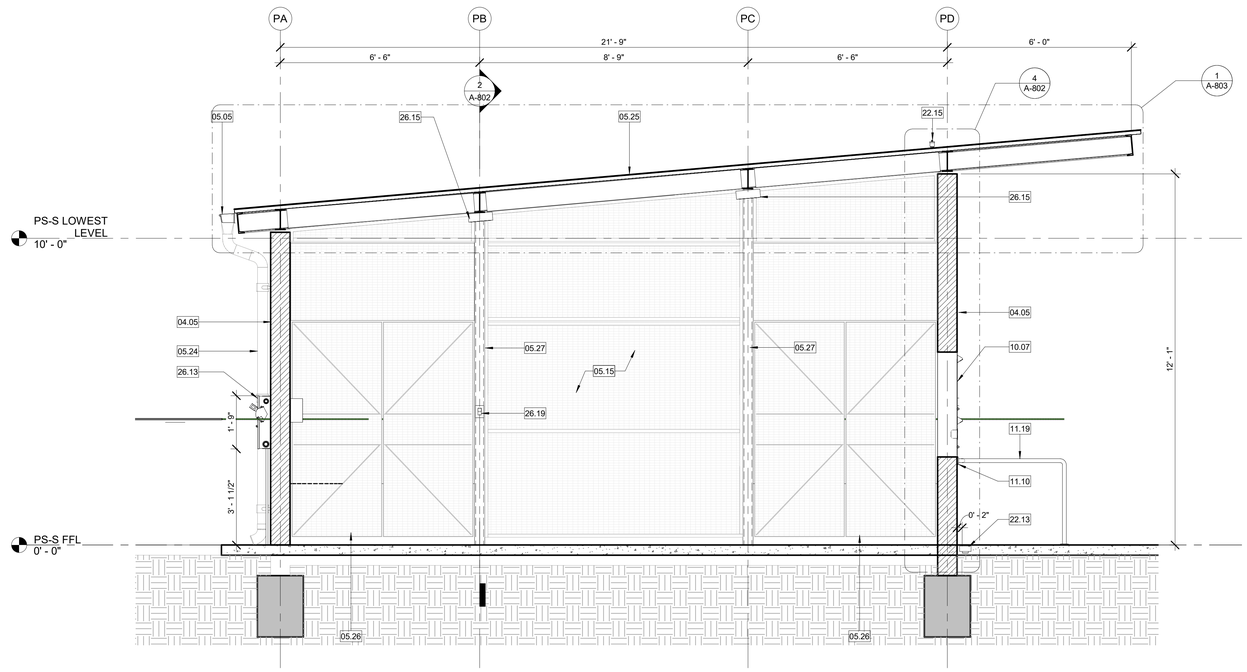

BUILDING LONGITUDINAL SECTION | 1/2" = 1'-0" | 1

APPROVAL

CITY APPROVED BY:

DIRECTOR OF PUBLIC WORKS DATE

CITY REVIEWED BY:

SENIOR ENGINEER DATE

SUBMITTED BY:

DATE

CLIENT

LANCASTER

Creating a better tomorrow. Together.

CITY OF LANCASTER

44933 FERN AVENUE
LANCASTER, CA 93534

PROJECT NAME

SAMARITAN'S PURSE PARK FORMERLY KNOWN AS EL DORADO PARK RENOVATION

PWCP NO. 24-008

44501 5TH ST EAST
LANCASTER, CA 93535

ENGINEER/ARCHITECT

IDS

IDS GROUP

1 PETERS CANYON ROAD, SUITE 130
IRVINE, CA 92606
TEL: 949-387-8500, FAX: 949-387-0800

STAMP

LICENSED ARCHITECT
JOSEPH MICHAEL SERRANO FILBERT
No. C-15573
REN. 7-31-25
STATE OF CALIFORNIA

ISSUE

REV.	DESCRIPTION	DATE
	30% CD SET	12/15/23
	60% CD SET	01/12/24
	90% CD SET	02/26/24
1	CLIENT REVISIONS	04/26/24
4	BULLETIN #1 R1	2/14/25
	COMPOSITE SET	9/24/25

PROJECT IDENTIFICATION

THIS DRAWING WAS CREATED IN REVIT V. 2020 UNLESS OTHERWISE NOTED.

THE ORIGINAL SIZE OF THIS SHEET IS 30" X 42"

THESE DRAWINGS AND SPECIFICATIONS ARE THE PROPERTY AND COPYRIGHT OF IDS GROUP AND SHALL NOT BE USED ON ANY OTHER PROJECT OR LOCATIONS EXCEPT AS DESCRIBED ON THE DRAWINGS, WITHOUT THE WRITTEN AGREEMENT WITH IDS GROUP.

IDS PROJECT NO.	22X099.03
IDS DRAWN BY	MJ
IDS CHECKED BY	MM
IDS APPROVED BY	JS

SHEET TITLE

PUMP STATION - ENLARGED PLAN & BUILDING SECTIONS

SHEET NUMBER

A-802

USER: Author

PLOT DATE: 4/25/2024 1:28:50 PM

IDS GROUP - FILE LOCATION: C:\Users\jane.kigula\Documents\22X099.01_ Pump Station_REVIT20_Jane.Kigula.rvt

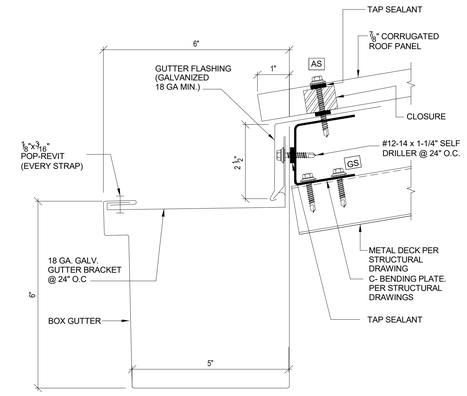

ENLARGED TYP. GUTTER DETAIL - N.T.S

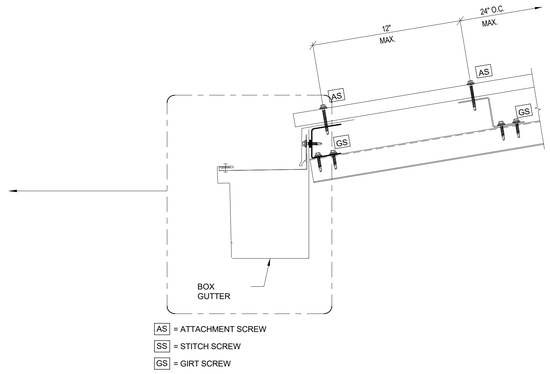

SEE STRUCTURAL DRAWINGS FOR DETAIL

TYP. LOW EDGE GUTTER DETAIL | 3" = 1'-0" | 6

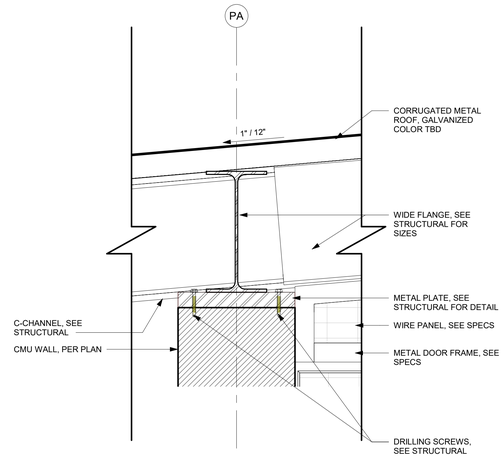

PUMP STATION ROOF DETAIL #5 | 3" = 1'-0" | 5

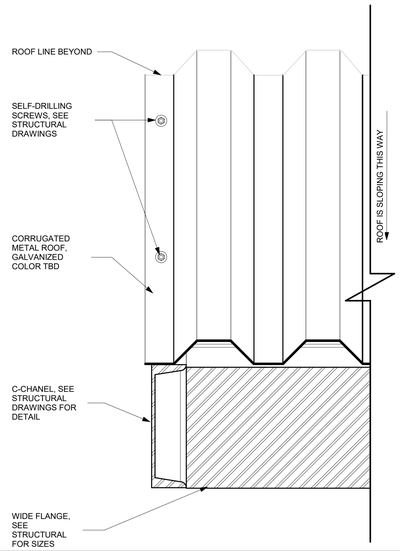

PUMP STATION ROOF - DETAIL #4 | 3" = 1'-0" | 4

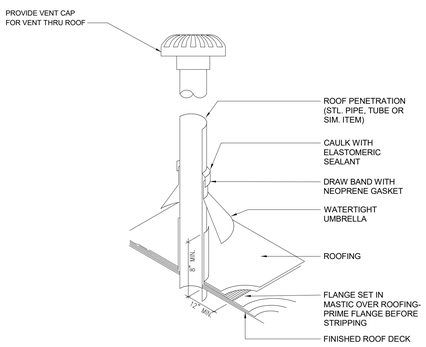

VENT THRU ROOF DETAIL | 12" = 1'-0" | 3

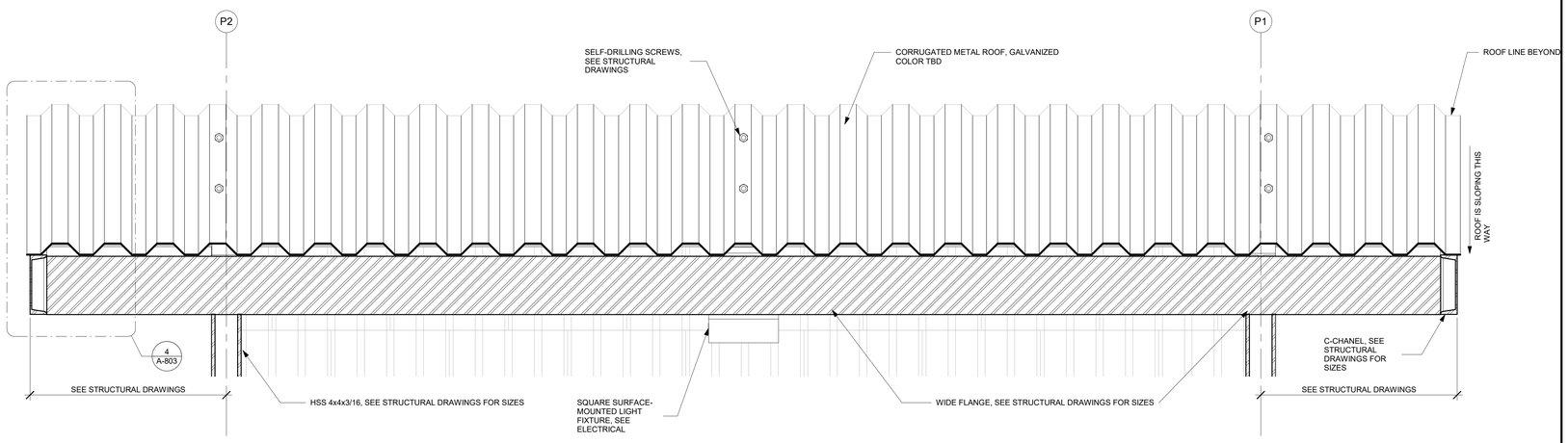

PUMP STATION ROOF - DETAIL #2 | 1 1/2" = 1'-0" | 2

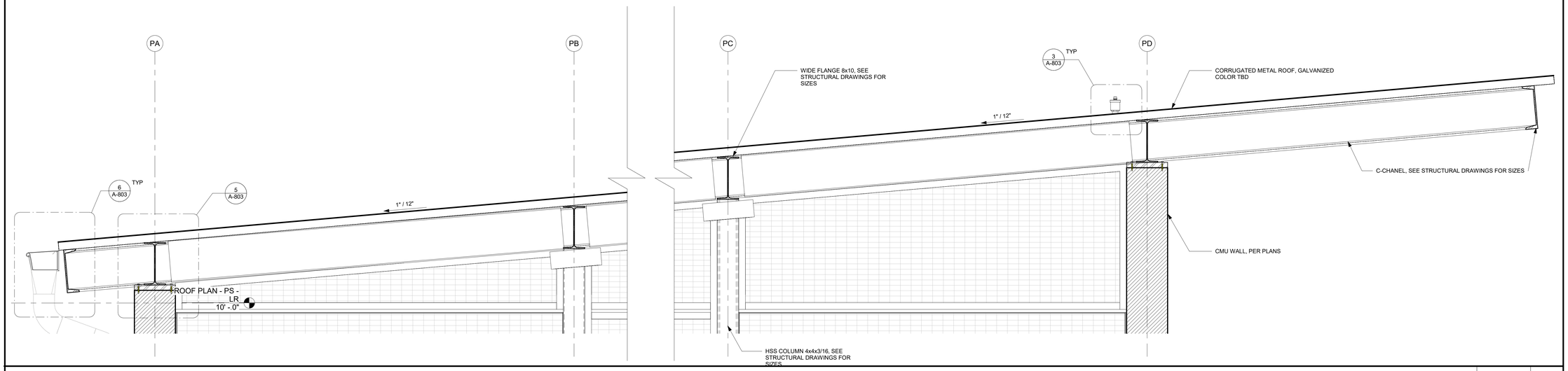

PUMP STATION ROOF - DETAIL #1 | 1 1/2" = 1'-0" | 1

APPROVAL

CITY APPROVED BY:

DIRECTOR OF PUBLIC WORKS — DATE

CITY REVIEWED BY:

SENIOR ENGINEER — DATE

SUBMITTED BY:

DATE

CLIENT

LANCASTER
Creating a better tomorrow. Together.

CITY OF LANCASTER

44933 FERN AVENUE
LANCASTER, CA 93534

PROJECT NAME

SAMARITAN'S PURSE PARK FORMERLY KNOWN AS EL DORADO PARK RENOVATION

PWCP NO. 24-008

44501 5TH ST EAST
LANCASTER, CA 93535

ENGINEER/ARCHITECT

IDS

IDS GROUP

1 PETERS CANYON ROAD, SUITE 130
IRVINE, CA 92606
TEL: 949-387-8500, FAX: 949-387-0800

STAMP

REGISTERED PROFESSIONAL ENGINEER — JOSEPH SIEGEL — No. C 55573 — REN. 7-31-25 — STATE OF CALIFORNIA

ISSUE

REV.	DESCRIPTION	DATE
	30% CD SET	12/15/23
	60% CD SET	01/12/24
	90% CD SET	02/26/24
1	CLIENT REVISIONS	04/26/24
4	BULLETIN #1 R1	2/14/25
	COMPOSITE SET	9/24/25

PROJECT IDENTIFICATION

THIS DRAWING WAS CREATED IN REVIT V. 2020 UNLESS OTHERWISE NOTED.

THE ORIGINAL SIZE OF THIS SHEET IS 30" X 42"

THESE DRAWINGS AND SPECIFICATIONS ARE THE PROPERTY AND COPYRIGHT OF IDS GROUP AND SHALL NOT BE USED ON ANY OTHER PROJECT OR LOCATIONS EXCEPT AS DESCRIBED ON THE DRAWINGS, WITHOUT THE WRITTEN AGREEMENT WITH IDS GROUP.

IDS PROJECT NO.	22X099.03
IDS DRAWN BY	MJ
IDS CHECKED BY	MM
IDS APPROVED BY	JS

SHEET TITLE

DETAILS - METAL ROOF AT PUMP STATION

SHEET NUMBER

A-803

IDS GROUP - FILE LOCATION: C:\Users\jane.kiguta\Documents\22X099.01_ Pump Station_REVIT20_Jane.Kiguta.rvt
PLOT DATE: 4/25/2024 1:28:54 PM
USER: Author

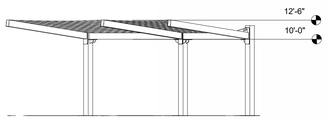

SHADE STRUCTURES 3 - AXON VIEW | 1/8" = 1'-0" | 3

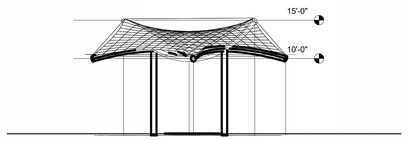

SHADE STRUCTURES 2 - AXON VIEW | 1/8" = 1'-0" | 2

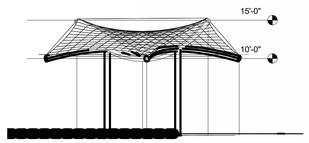

SHADE STRUCTURE 1 - AXON VIEW | 1/8" = 1'-0" | 1

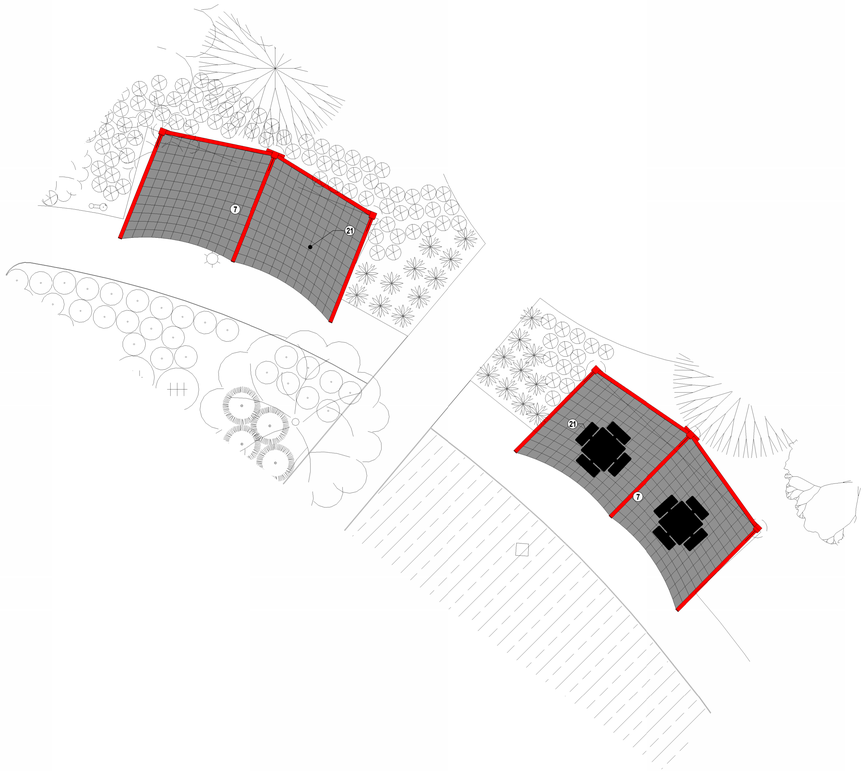

SHADE STRUCTURES 3 - PLAN VIEW | 1/8" = 1'-0" | 6

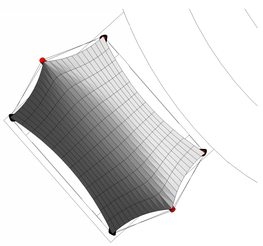

SHADE STRUCTURE 2 - PLAN VIEW | 1/8" = 1'-0" | 5

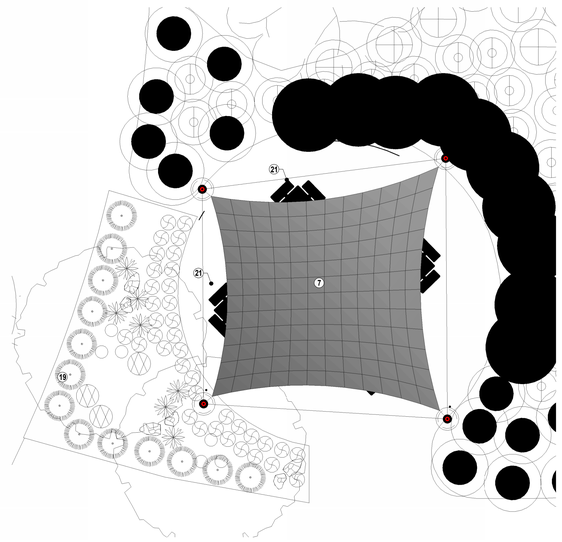

SHADE STRUCTURE 1 - PLAN VIEW | 1/8" = 1'-0" | 4

KEYNOTES

1	COMMUNITY BUILDING
2	PICNIC PLAZA
3	SPLASH PAD
4	HALF BASKETBALL COURT
5	(E) SIDEWALK
6	PLAZA WITH ENHANCE PAVING IN AEROSPACE / AVIATION THEME
7	SAIL SHADE AREA FOR PICNIC
8	LIGHT OUTDOOR POST
9	PEDESTRIAN PATHWAY- RUNWAY AERONOTICAL AND AVIATION THEME
10	11 STATION - EXERCISE EQUIPMENT
11	CELL (SEE CIVIL SHEETS)
12	FOCAL POINT GRAPHIC MURAL
13	MONUMENTAL SIGNAGE
14	FLAG POLE LOCATION
15	PUMP STATION, SEE SHEET A-801
16	VEHICLE ACCESS
17	DECOMPSED GRANITE PATHWAY
18	CAMERA ON (E) CELL TOWER
19	DRINKING FOUNTAIN
20	LANDSCAPE (SEE LANDSCAPE SHEETS)
21	OUTDOOR TABLE / BENCHES
22	SKATE PARK

SHEET NOTES

1. SHADE STRUCTURE(S) TO BE A DEFERRED SUBMITTAL. PROVIDED DRAWINGS ARE FOR DESIGN-INTENT PURPOSES ONLY.
2. BASIS OF DESIGN DRAWINGS PROVIDED BY USA SHADE. CONTACT: PATTI ABRECHT AT PATTI.ABRECHT@USA-SHADE.COM

APPROVAL

CITY APPROVED BY:

DIRECTOR OF PUBLIC WORKS DATE

CITY REVIEWED BY:

SENIOR ENGINEER DATE

SUBMITTED BY:

DATE

CLIENT

LANCASTER

Creating a better tomorrow. Together.

CITY OF LANCASTER

44933 FERN AVENUE
LANCASTER, CA 93534

PROJECT NAME

SAMARITAN'S PURSE PARK FORMERLY KNOWN AS EL DORADO PARK RENOVATION

PWCP NO. 24-008

44501 5TH ST EAST
LANCASTER, CA 93535

ENGINEER/ARCHITECT

IDS

IDS GROUP

1 PETERS CANYON ROAD, SUITE 130
IRVINE, CA. 92606
TEL: 949-387-8500, FAX: 949-387-0800

STAMP

LICENSED ARCHITECT
JOHN JOSEPH SILBER
No. C-15573
REN. 7-31-25
STATE OF CALIFORNIA

ISSUE

REV.	DESCRIPTION	DATE
	30% CD SET	12/15/23
	60% CD SET	01/12/24
	90% CD SET	02/26/24
1	CLIENT REVISIONS	04/26/24
4	BULLETIN #1 R1	2/14/25
	COMPOSITE SET	9/24/25

PROJECT IDENTIFICATION

THIS DRAWING WAS CREATED IN REVIT V. 2020 UNLESS OTHERWISE NOTED.

THE ORIGINAL SIZE OF THIS SHEET IS 30" X 42"

THESE DRAWINGS AND SPECIFICATIONS ARE THE PROPERTY AND COPYRIGHT OF IDS GROUP AND SHALL NOT BE USED ON ANY OTHER PROJECT OR LOCATIONS EXCEPT AS DESCRIBED ON THE DRAWINGS, WITHOUT THE WRITTEN AGREEMENT WITH IDS GROUP.

IDS PROJECT NO.	22X099.03
IDS DRAWN BY	MJ
IDS CHECKED BY	MM
IDS APPROVED BY	JS

SHEET TITLE

SHADE STRUCTURES - ENLARGED PLANS & ELEVATIONS

SHEET NUMBER

A-805

IDS GROUP - FILE LOCATION: C:\Users\jane.kiguta\Documents\22X099.01_ Pump Station_REVIT20_Jane.Kiguta.rvt
PLOT DATE: 4/25/2024 1:29:08 PM
USER: Author

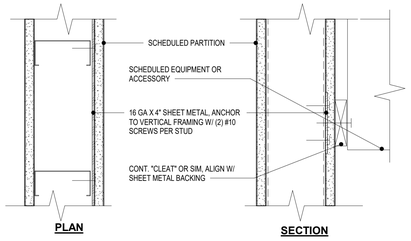

(A) TYP WALL BACKING FOR OBJECTS UNDER 25 LBS./LINEAL FT.

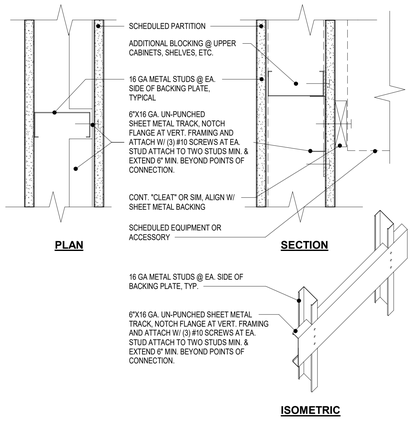

(B) TYP WALL BACKING FOR WALL MOUNTED OBJECTS W/ MAX. VERTICAL LOAD OF 100 LBS./LINEAL FT. OR 250 LBS POINT LOAD

NOTE:

1. COORDINATE BACKING PLATE LOCATION WITH ACCESSORY MANUFACTURER MOUNTING INSTRUCTIONS.
2. SEE STRUCTURAL ENGINEER FOR BLOCKING FRAMING FOR HEAVIER LOADING.
3. PROVIDE BACKING AT ITEMS SUCH AS SHELVING, MILLWORK, RESTROOM FIXTURES, HANDRAILS,GRAB BARS, SIGNAGE & TOILET ACCESSORY ANCHORAGES, ETC. AS REQUIRED FOR PROPER ATTACHMENT AND AS REQUIRED BY THE G.C.

BACKING PLATE DETAIL, TYPICAL | 3" = 1'-0" | 2

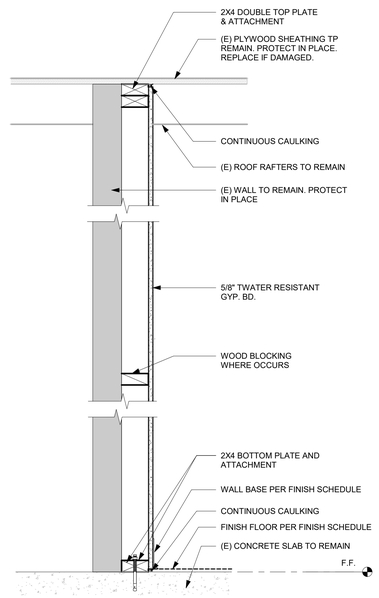

INTERIOR WALL PARTITION SCHEDULE				
WALL TYPE	STUD SIZE	STUD SPCG.	FIRE RATING	COMMENTS
B	2X4	16" O.C.	NR	1 LAYER TYPE 'X' GYP. BD. AT INTERIOR SIDE

INTERIOR WALL ASSEMBLY - TYPE B. | 1 1/2" = 1'-0" | 3

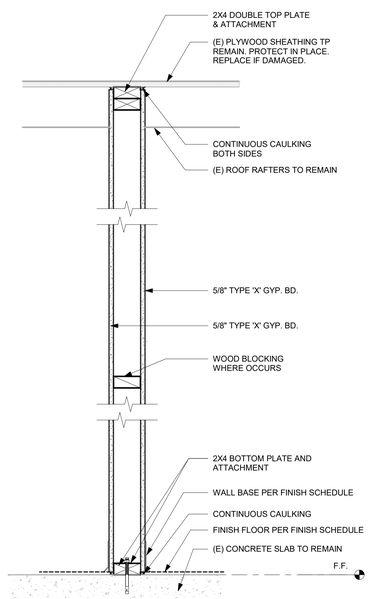

INTERIOR WALL PARTITION SCHEDULE				
WALL TYPE	STUD SIZE	STUD SPCG.	FIRE RATING	COMMENTS
A	2X4	16" O.C.	NR	1 LAYER TYPE 'X' GYP. BD. AT BOTH SIDES

INTERIOR WALL ASSEMBLY - TYPE A | 1 1/2" = 1'-0" | 1

APPROVAL

CITY APPROVED BY:

DIRECTOR OF PUBLIC WORKS — DATE

CITY REVIEWED BY:

SENIOR ENGINEER — DATE

SUBMITTED BY:

DATE

CLIENT

LANCASTER

Creating a better tomorrow. Together.

CITY OF LANCASTER

44933 FERN AVENUE
LANCASTER, CA 93534

PROJECT NAME

SAMARITAN'S PURSE PARK FORMERLY KNOWN AS EL DORADO PARK RENOVATION

PWCP NO. 24-008

44501 5TH ST EAST
LANCASTER, CA 93535

ENGINEER/ARCHITECT

IDS

IDS GROUP

1 PETERS CANYON ROAD, SUITE 130
IRVINE, CA. 92606
TEL: 949-387-8500, FAX: 949-387-0800

STAMP

REGISTERED ARCHITECT — JOSEPH SILVERA — No. C-15573 — REN. 7-31-25 — STATE OF CALIFORNIA

ISSUE

REV.	DESCRIPTION	DATE
	30% CD SET	12/15/23
	60% CD SET	01/12/24
	90% CD SET	02/26/24
1	CLIENT REVISIONS	04/26/24
2	BID SET	09/10/24
3	BULLETIN #1	10/25/24
4	BULLETIN #1 R1	2/14/25
	COMPOSITE SET	9/24/25

PROJECT IDENTIFICATION

THIS DRAWING WAS CREATED IN REVIT V. 2020 UNLESS OTHERWISE NOTED.

THE ORIGINAL SIZE OF THIS SHEET IS 30" X 42"

THESE DRAWINGS AND SPECIFICATIONS ARE THE PROPERTY AND COPYRIGHT OF IDS GROUP AND SHALL NOT BE USED ON ANY OTHER PROJECT OR LOCATIONS EXCEPT AS DESCRIBED ON THE DRAWINGS, WITHOUT THE WRITTEN AGREEMENT WITH IDS GROUP.

IDS PROJECT NO.	22X099.03
IDS DRAWN BY	MJ
IDS CHECKED BY	MM
IDS APPROVED BY	JS

SHEET TITLE

INTERIOR WALL PARTITION TYPES

SHEET NUMBER

A-901

IDS GROUP - FILE LOCATION: C:\Users\mathias.jurahetian\Documents\22X099.01 LANC - EI DORADO PARK (E) COMMUNITY CENTER RENOVATION_ARCH_NYD2022_mathias.jurahetian.rvt
PLOT DATE: 10/29/2024 4:32:17 PM
USER: Author

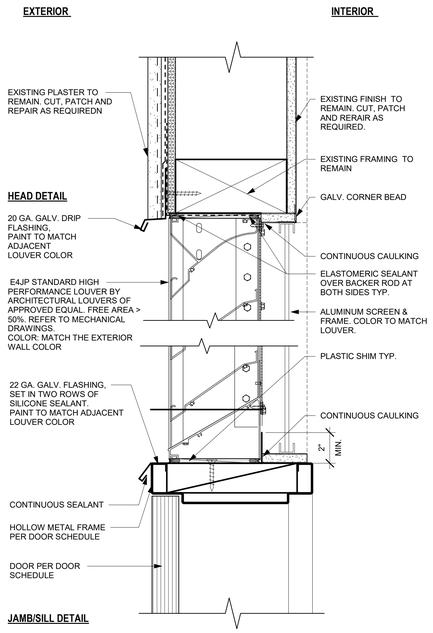

MECH. LOUVER VENT ABOVE DOOR | 3" = 1'-0" | 15

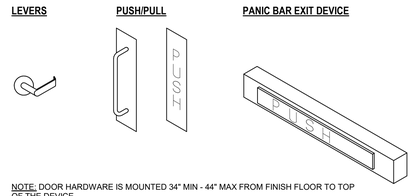

NOTE: DOOR HARDWARE IS MOUNTED 34" MIN - 44" MAX FROM FINISH FLOOR TO TOP OF THE DEVICE.

LATCHING & LOCKING DOORS THAT ARE HAND OPERATED AND WHICH ARE IN A PATH OF TRAVEL ARE OPERABLE WITH A SINGLE EFFORT (LEVER, PUSH/PULL, PANIC BAR OR OTHER HARDWARE ASSIGNED TO PROVIDE PASSAGE WITHOUT REQUIRING THE ABILITY TO GRASP, PINCH, OR TWIST THE OPENING HARDWARE)

MAXIMUM EFFORT TO OPERATE DOORS SHALL NOT EXCEED 5 LBF, WHEN FIRE DOORS ARE REQUIRED THE MAX EFFORT TO OPERATE THE DOOR MAY BE INCREASED TO THE MINIMUM ALLOWABLE BY THE APPROPRIATE AUTHORITY , NOT TO EXCEED 15 LBF.

DOOR ACCESSIBLE HARDWARE | 1" = 1'-0" | 11

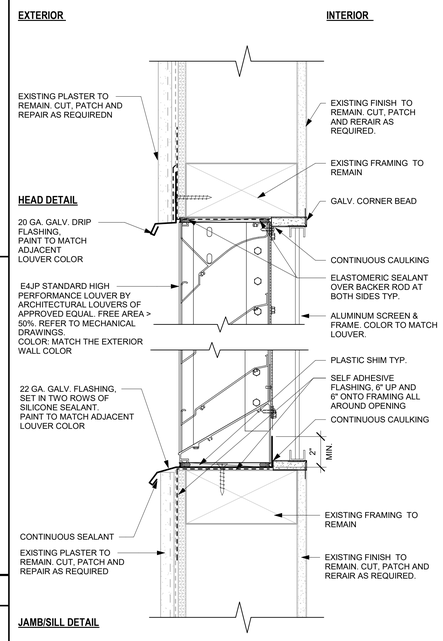

MECH. LOUVER VENT | 3" = 1'-0" | 7

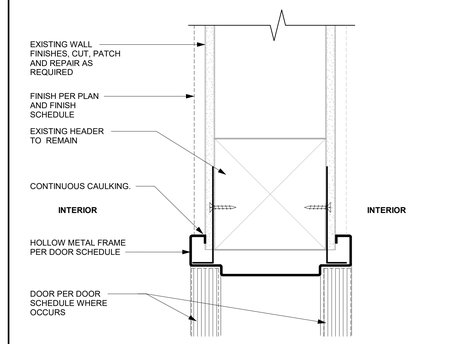

INTERIOR HM DOOR - HEAD/JAMB | 3" = 1'-0" | 4

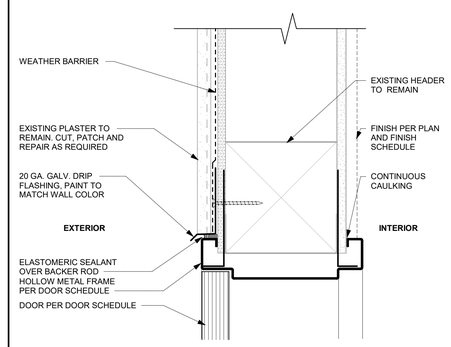

HM DOOR AT PLASTER - HEAD | 3" = 1'-0" | 3

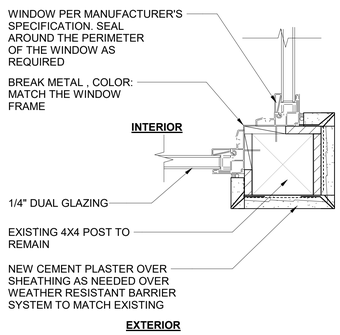

CORNER WINDOW - MULLION | 3" = 1'-0" | 14

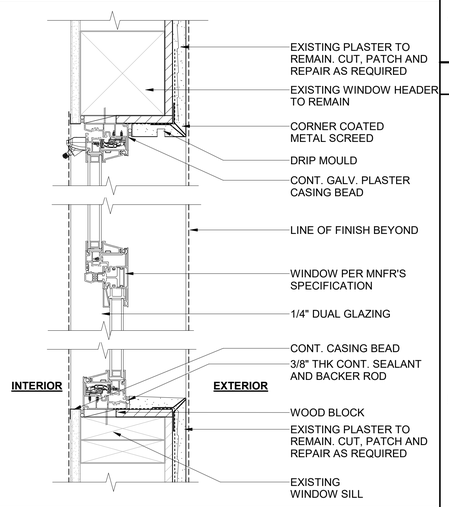

FIXED / AWNING WINDOW - HEAD & SILL | 3" = 1'-0" | 10

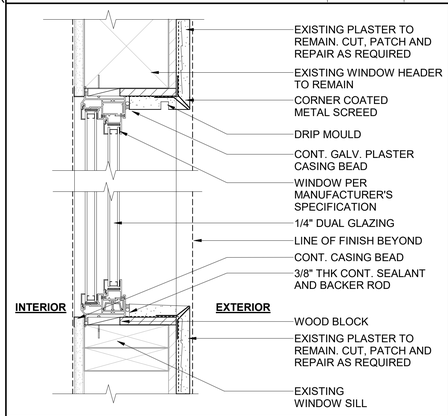

SLIDING WINDOW - HEAD & SILL | 3" = 1'-0" | 6

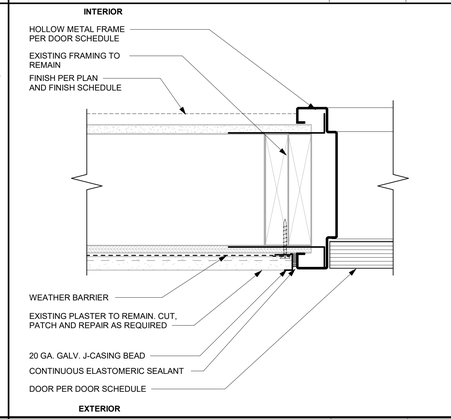

HM DOOR AT PLASTER - JAMB | 3" = 1'-0" | 2

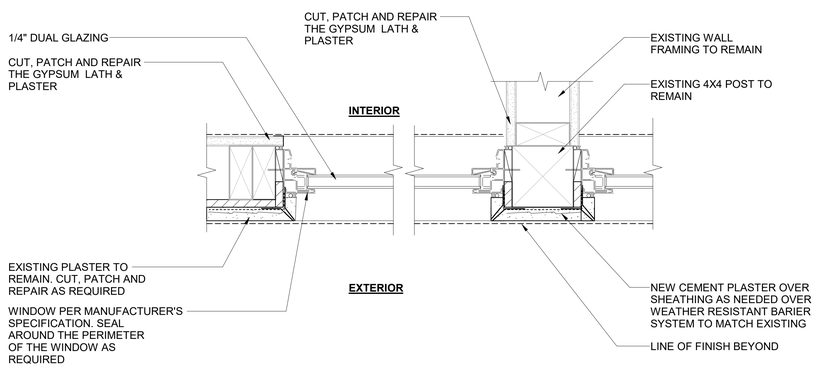

FIXED/AWNING WINDOW - JAMB/MULLION | 3" = 1'-0" | 13

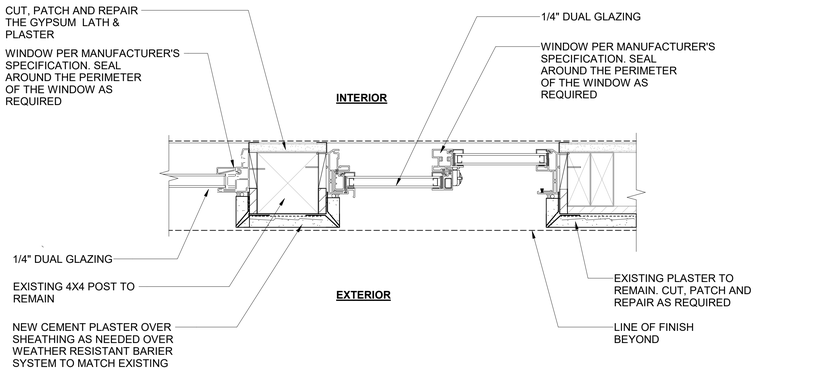

SLIDING WINDOW - JAMB / MULLION | 3" = 1'-0" | 5

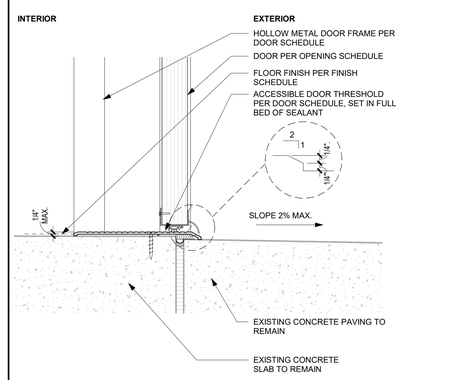

HM DOOR THRESHOLD | 3" = 1'-0" | 1

APPROVAL

CITY APPROVED BY:

DIRECTOR OF PUBLIC WORKS — DATE

CITY REVIEWED BY:

SENIOR ENGINEER — DATE

SUBMITTED BY:

DATE

CLIENT

LANCASTER

Creating a better tomorrow. Together.

CITY OF LANCASTER

44933 FERN AVENUE
LANCASTER, CA 93534

PROJECT NAME

SAMARITAN'S PURSE PARK FORMERLY KNOWN AS EL DORADO PARK RENOVATION

PWCP NO. 24-008

44501 5TH ST EAST
LANCASTER, CA 93535

ENGINEER/ARCHITECT

IDS

IDS GROUP

1 PETERS CANYON ROAD, SUITE 130
IRVINE, CA. 92606
TEL: 949-387-8500, FAX: 949-387-0800

STAMP

REGISTERED ARCHITECT JOSEPH SILVERIO SOLIS No. C-15573 REN. 7-31-25 STATE OF CALIFORNIA

ISSUE

REV.	DESCRIPTION	DATE
	30% CD SET	12/15/23
	60% CD SET	01/12/24
	90% CD SET	02/26/24
1	CLIENT REVISIONS	04/26/24
2	BID SET	09/10/24
3	BULLETIN #1	10/25/24
4	BULLETIN #1 R1	2/14/25
	COMPOSITE SET	9/24/25

PROJECT IDENTIFICATION

THIS DRAWING WAS CREATED IN REVIT V. 2020 UNLESS OTHERWISE NOTED.

THE ORIGINAL SIZE OF THIS SHEET IS 30" X 42"

THESE DRAWINGS AND SPECIFICATIONS ARE THE PROPERTY AND COPYRIGHT OF IDS GROUP AND SHALL NOT BE USED ON ANY OTHER PROJECT OR LOCATIONS EXCEPT AS DESCRIBED ON THE DRAWINGS, WITHOUT THE WRITTEN AGREEMENT WITH IDS GROUP.

IDS PROJECT NO.	22X099.03
IDS DRAWN BY	MJ
IDS CHECKED BY	MM
IDS APPROVED BY	JS

SHEET TITLE

DETAILS - DOOR & WINDOWS

SHEET NUMBER

A-902

IDS GROUP - FILE LOCATION: C:\Users\mathea.jauhariari\Documents\22X099.01 LANC - El DORADO PARK (E) COMMUNITY CENTER RENOVATION_ARCH_CNTR22X099_mathea.jauhariari.rvt
PLOT DATE: 10/29/2024 4:32:19 PM
USER: Author

DOOR SCHEDULE

DOOR #	FROM ROOM:	TO ROOM:	TYPE	DOOR DIMENSION W	DOOR DIMENSION H	DOOR DIMENSION T	DOOR MATERIAL & FINISH MATERIAL	DOOR MATERIAL & FINISH FINISH	DOOR MATERIAL & FINISH GLASS FINISH	FRAME TYPE	FRAME MATERIAL & FINISH MATERIAL	FRAME MATERIAL & FINISH FINISH	HDW SET	FIRE RATED	EXIT DEVICE	DETAILS HEAD	DETAILS JAMB	DETAILS THRESHOLD	COMMENTS
01	DIRECTOR'S OFFICE		C	3' - 0"	7' - 0"	1 3/4"	H.M.	PAINT	CLEAR	1	H.M.	PAINT	6			3/A-902	2/A-902	1/A-902	
02	DIRECTOR'S OFFICE	STORAGE #1	A	3' - 0"	7' - 0"	1 3/4"	SOLID CORE	PAINT	-	1	H.M.	PAINT	7			4/A-902	4/A-902		
03A		CRAFTS RM	C	3' - 0"	7' - 0"	1 3/4"	H.M.	PAINT	CLEAR	1	H.M.	PAINT	4			3/A-902	2/A-902	1/A-902	
03B	CRAFTS RM	DIRECTOR'S OFFICE	A	3' - 0"	7' - 0"	1 3/4"	SOLID CORE	PAINT	-	1	H.M.	PAINT	8			4/A-902	4/A-902		
03C	PATIO	CRAFTS RM	C	3' - 0"	7' - 0"	1 3/4"	H.M.	PAINT	CLEAR	1	H.M.	PAINT	4			3/A-902	2/A-902	1/A-902	
05	CRAFTS RM	STORAGE #2	A	2' - 6"	7' - 0"	1 3/4"	SOLID CORE	PAINT	-	1	H.M.	PAINT	7			4/A-902	4/A-902		
06A		WOMEN'S TOILET	B	3' - 0"	7' - 0"	1 3/4"	H.M.	PAINT		1	H.M.	PAINT	4			3/A-902	2/A-902	1/A-902	
06B	WOMEN'S TOILET	PATIO	B	3' - 0"	7' - 0"	1 3/4"	H.M.	PAINT		1	H.M.	PAINT	3			3/A-902	2/A-902	1/A-902	
07	ELEC. EQUIP.	PATIO	B	3' - 0"	7' - 0"	1 3/4"	H.M.	PAINT		1	H.M.	PAINT	1			3/A-902	2/A-902	1/A-902	
08	EQUIPMENT STORAGE		B	3' - 0"	7' - 0"	1 3/4"	H.M.	PAINT		1	H.M.	PAINT	5			3/A-902	2/A-902	1/A-902	
09A		MEN'S TOILET	B	3' - 0"	7' - 0"	1 3/4"	H.M.	PAINT		1	H.M.	PAINT	4			3/A-902	2/A-902	1/A-902	
09B	MEN'S TOILET	PATIO	B	3' - 0"	7' - 0"	1 3/4"	H.M.	PAINT		1	H.M.	PAINT	3			3/A-902	2/A-902	1/A-902	
10			B	2' - 4"	6' - 8"	1 3/4"	H.M.	PAINT	-	1	H.M.	PAINT	5			3/A-902	2/A-902	1/A-902	
10A	PATIO		E	6' - 0"	6' - 0"	3"	METAL	PAINT			METAL	PAINT							PAINT BLACK
10B				11' - 4"	6' - 0"														CLEAN THOROUGHLY AND POWER WASH GATE AS REQUIRED TO RECEIVE NEW BLACK PAINT. INSTALL NEW CITY PROVIDED LOCK.
10C				11' - 4"	6' - 0"														CLEAN THOROUGHLY AND POWER WASH GATE AS REQUIRED TO RECEIVE NEW BLACK PAINT. INSTALL NEW CITY PROVIDED LOCK.
10D				10' - 0"	6' - 0"														CLEAN THOROUGHLY AND POWER WASH GATE AS REQUIRED TO RECEIVE NEW BLACK PAINT. INSTALL NEW CITY PROVIDED LOCK.
11			-	3' - 0"	7' - 0"														SEE THE METAL PANEL SHEETS A-403 & A-404 FOR MORE INFORMATION
200A			D	6' - 0"	10' - 0"	7"	METAL	PAINT			METAL	PAINT							
200B			D	6' - 0"	10' - 0"	7"	METAL	PAINT			METAL	PAINT							
200C			D	6' - 0"	10' - 0"	7"	METAL	PAINT			METAL	PAINT							
200D			D	6' - 0"	10' - 0"	7"	METAL	PAINT			METAL	PAINT							

WINDOW SCHEDULE

TYPE MARK	QTY.	SILL HEIGHT.	WINDOW SIZE WIDTH	WINDOW SIZE HEIGHT	FRAME MATERIAL & FINISH MATERIAL	FRAME MATERIAL & FINISH FINISH	GLAZING	DETAILS SILL	DETAILS JAMB / MULLION	DETAILS HEAD	REMARKS
A	1	2'-11" V.I.F	10' - 8"	4' - 1"	STEEL	PAINT, MATCH EXTERIOR WALL	TEMPERED	10/A-902	13/A-902	10/A-902	AWNING - IN SWING OPENING. PAINT TO MATCH ADJACENT WALL
B	1	2'-11" V.I.F	7' - 3"	4' - 1"	STEEL	PAINT, MATCH EXTERIOR WALL	TEMPERED	10/A-902	13 & 14/A-902	10/A-902	AWNING - IN SWING OPENING. PAINT TO MATCH ADJACENT WALL
B1	1	2'-11" V.I.F	6' - 11"	4' - 1"	STEEL	PAINT, MATCH EXTERIOR WALL	TEMPERED	10/A-902	13 & 14/A-902 (SIM)	10/A-902	AWNING - IN SWING OPENING. PAINT TO MATCH ADJACENT WALL
C	1	2'-11" V.I.F	3' - 5"	4' - 1"	STEEL	PAINT, MATCH EXTERIOR WALL	TEMPERED	10/A-902	5/A-902	10/A-902	AWNING - IN SWING OPENING. PAINT TO MATCH ADJACENT WALL
D	1	2'-11" V.I.F	5' - 0"	4' - 1"	ALUMINUM	ANODIZED, COLOR; MATCH EXT. WALL	TEMPERED	6/A-902	5 & 14 /A-902	6/A-902	SLIDING WINDOW
E1	2	5'-2" V.I.F	7' - 0"	2' - 0"	ALUMINUM	ANODIZED, COLOR; MATCH EXT. WALL		7/A-902	7/A-902	7/A-902	SEE MECHANICAL PLANS
F	2	5'-2" V.I.F	3' - 9"	2' - 0"	ALUMINUM	ANODIZED, COLOR; MATCH EXT. WALL		7/A-902	7/A-902	7/A-902	SEE MECHANICAL PLANS
F1	4	7'-2" V.I.F	3' - 0"	1' - 7 1/2"	ALUMINUM	ANODIZED, COLOR; MATCH EXT. WALL		15/A-902	15/A-902	15/A-902	SEE MECHANICAL PLANS

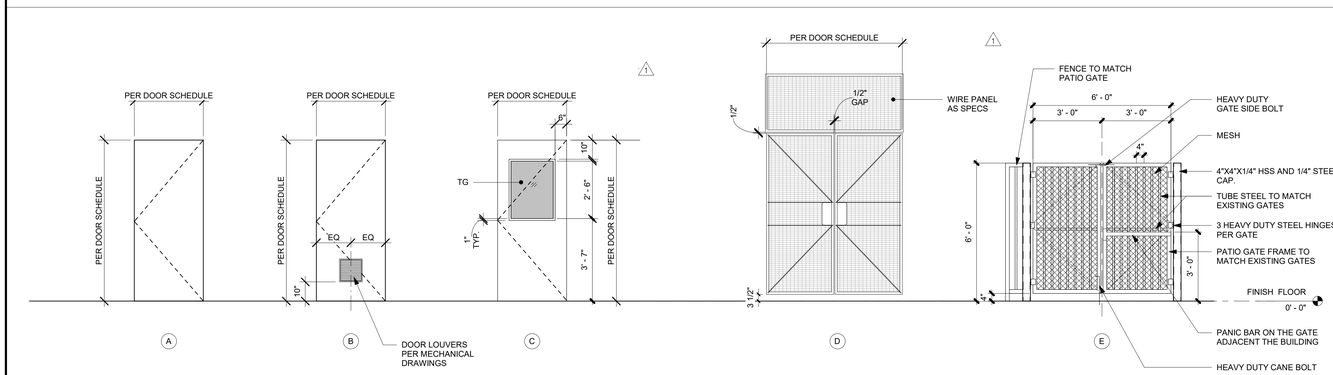

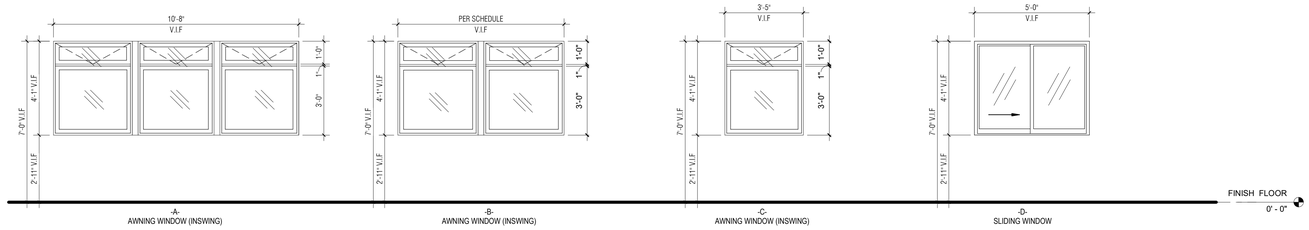

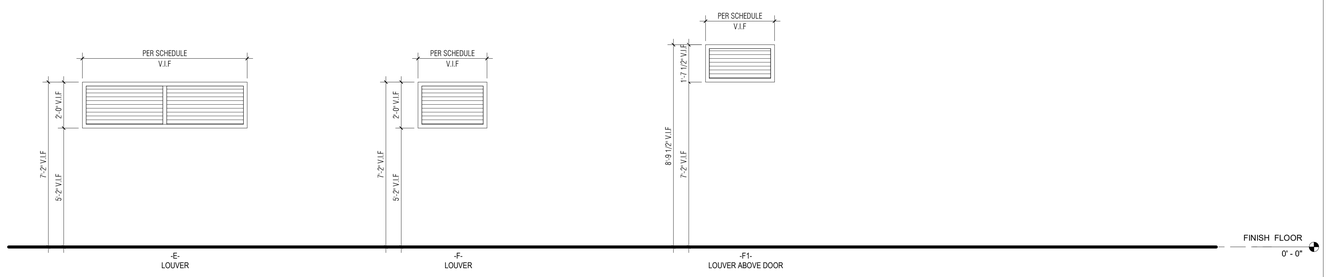

DOOR & WINDOW/LOUVER TYPES | 3/8" = 1'-0" | 11

DOOR HARDWARE SETS

GROUP NO# 1.0
DOOR(S): 07
PROVIDE EACH SINGLE DOOR(S) WITH THE FOLLOWING:

QTY	DESCRIPTION	CATALOGUE NO.	FINISH	MNR
3 EACH	HINGE (HEAVY WEIGHT)	T4A3386 (NRP)	US32D	MK
1 EACH	RIM EXIT DEVICE, STOREROOM	43 SCH 64 8804 ETL	US32D	SA
1 EACH	CORE	DG1 6300	US15	SA
1 EACH	SURFACE CLOSER - CLOSER STOP	CPS7500	689	NO
1 EACH	GASKETING	303AS	-	PE
1 EACH	RAIN GUARD	346C (OMIT @ OVERHANG)	-	PE
1 EACH	SWEEP	315CN	-	PE
1 EACH	THRESHOLD	171A OR PER SILL DETAIL	-	PE

GROUP NO# 2.0
DOOR(S): 03A & 03C
PROVIDE EACH SINGLE DOOR(S) WITH THE FOLLOWING:

QTY	DESCRIPTION	CATALOGUE NO.	FINISH	MNR
3 EACH	HINGE (HEAVY WEIGHT)	T4A3386 (NRP)	US32D	MK
1 EACH	RIM EXIT DEVICE, CLASSROOM	43 SCH 64 8813 ETL	US32D	SA
1 EACH	CORE	DG1 6300	US15	SA
1 EACH	SURFACE CLOSER - CLOSER STOP	CPS7500	689	NO
1 EACH	GASKETING	303AS	-	PE
1 EACH	RAIN GUARD	346C (OMIT @ OVERHANG)	-	PE
1 EACH	SWEEP	315CN	-	PE
1 EACH	THRESHOLD	171A OR PER SILL DETAIL	-	PE

GROUP NO# 3.0
DOOR(S): 06B & 09B
PROVIDE EACH SINGLE DOOR(S) WITH THE FOLLOWING:

QTY	DESCRIPTION	CATALOGUE NO.	FINISH	MNR
3 EACH	HINGE, FULL MORTISE	TA2314 (NRP)	US32D	MK
1 EACH	DEADBOLT	64 486	US26D	SA
1 EACH	CORE	DG1 6300	US15	SA
1 EACH	PUSH PULL PLATE	110X73C/73CL	US32D	RO
1 EACH	SURFACE CLOSER - CLOSER STOP	CPS7500	689	NO
1 EACH	MOP PLATE	K1050 6" HIGH CSK BEV	US32D	RO
1 EACH	KICK PLATE	K1050 10" HIGH CSK BEV	US32D	RO
1 EACH	GASKETING	303AS	-	PE
1 EACH	RAIN GUARD	346C (OMIT @ OVERHANG)	-	PE
1 EACH	SWEEP	315CN	-	PE
1 EACH	THRESHOLD	171A OR PER SILL DETAIL	-	PE

GROUP NO# 4.0
DOOR(S): 06A & 09A
PROVIDE EACH SINGLE DOOR(S) WITH THE FOLLOWING:

QTY	DESCRIPTION	CATALOGUE NO.	FINISH	MNR
3 EACH	HINGE, FULL MORTISE	TA2314 (NRP)	US32D	MK
1 EACH	DEADBOLT	64 486	US26D	SA
1 EACH	CORE	DG1 6300	US15	SA
1 EACH	PUSH PULL PLATE	110X73C/73CL	US32D	RO
1 EACH	SURFACE CLOSER - TRI PACK	7500 MOUNTING AS REQ'D	689	NO
1 EACH	MOP PLATE	K1050 6" HIGH CSK BEV	US32D	RO
1 EACH	KICK PLATE	K1050 10" HIGH CSK BEV	US32D	RO
1 EACH	DOOR STOP & HOLDER	491 SERIES	US26D	RO
1 EACH	GASKETING	303AS	-	PE
1 EACH	RAIN GUARD	346C (OMIT @ OVERHANG)	-	PE
1 EACH	SWEEP	315CN	-	PE
1 EACH	THRESHOLD	171A OR PER SILL DETAIL	-	PE

NOTES: TEMPLATE HINGES AND HOLDER FOR 180 DEGREES

GROUP NO# 5.0
DOOR(S): 08 & 10
PROVIDE EACH SINGLE DOOR(S) WITH THE FOLLOWING:

QTY	DESCRIPTION	CATALOGUE NO.	FINISH	MNR
3 EACH	HINGE, FULL MORTISE	TA2314 (NRP)	US32D	MK
1 EACH	STOREROOM/CLOSET LOCK	64 10XG04 LL	US26D	SA
1 EACH	CORE	DG1 6300	US15	SA
1 EACH	SURFACE CLOSER - CLOSER STOP	CPS7500	689	NO
1 EACH	KICK PLATE	K1050 10" HIGH CSK BEV	US32D	RO
1 EACH	GASKETING	303AS	-	PE
1 EACH	RAIN GUARD	346C (OMIT @ OVERHANG)	-	PE
1 EACH	SWEEP	315CN	-	PE
1 EACH	THRESHOLD	171A OR PER SILL DETAIL	-	PE

GROUP NO# 6.0
DOOR(S): 01
PROVIDE EACH SINGLE DOOR(S) WITH THE FOLLOWING:

QTY	DESCRIPTION	CATALOGUE NO.	FINISH	MNR
3 EACH	HINGE, FULL MORTISE	TA2314 (NRP)	US32D	MK
1 EACH	ENTRY/OFFICE LOCK	64 10XG05 LL	US26D	SA
1 EACH	CORE	DG1 6300	US15	SA
1 EACH	SURFACE CLOSER - CLOSER STOP	CPS7500	689	NO
1 EACH	KICK PLATE	K1050 10" HIGH CSK BEV	US32D	RO
1 EACH	GASKETING	303AS	-	PE
1 EACH	RAIN GUARD	346C (OMIT @ OVERHANG)	-	PE
1 EACH	SWEEP	315CN	-	PE
1 EACH	THRESHOLD	171A OR PER SILL DETAIL	-	PE

GROUP NO# 7.0
DOOR(S): 02 & 05
PROVIDE EACH SINGLE DOOR(S) WITH THE FOLLOWING:

QTY	DESCRIPTION	CATALOGUE NO.	FINISH	MNR
3 EACH	HINGE, FULL MORTISE	TA2714 (NRP)	US32D	MK
1 EACH	STOREROOM/ CLOSET LOCK	64 10XG04 LL	US26D	SA
1 EACH	WALL STOP	403	US26D	RO
3 EACH	SILENCER	608-RKW	-	RO

GROUP NO# 8.0
DOOR(S): 03B
PROVIDE EACH SINGLE DOOR(S) WITH THE FOLLOWING:

QTY	DESCRIPTION	CATALOGUE NO.	FINISH	MNR
3 EACH	HINGE, FULL MORTISE	TA2714 (NRP)	US32D	MK
1 EACH	ENTRY / OFFICE LOCK	64 10XG05 LL	US26D	SA
1 EACH	WALL STOP	403	US26D	RO
3 EACH	SILENCER	608-RKW	-	RO

NOTE:
1- DOOR OPENING HARDWARE SHALL BE CENTERED BETWEEN 34 AND 44 INCES ABOVE THE FLOOR. PER 2022 CBC 11B-404.2.7.

DOOR HARDWARE NOTES

1. ALL KEYING SHALL BE COORDINATED WITH OWNER DURING SUBMITTAL PROCESS
2. DOOR HARDWARE LOCATION PER DETAILS 1/ A-910 AND11/ A-902
3. PROVIDE NON-REMOVABLE PINS ON ALL HINGES WHICH ARE ACCESSIBLE FROM THE EXTERIOR WHEN THE DOOR IS CLOSED.
4. THE SWEEP OF A DOOR CLOSER SHALL BE ADJUSTED SO THAT FROM AN OPEN POSITION OF 70 DEGREES, THE DOOR WILL TAKE AT LEAST 3 SECONDS TO MOVE TO A POINT 3" FROM THE LATCH AS MEASURED FROM THE LEADING EDGE OF THE DOOR.
5. THE "WIDTH", "HEIGHT" AND "THICK." INDICATE NOMINAL DIMENSIONS OF THE WIDTH, HEIGHT AND THICKNESS OF EACH DOOR. FIELD VERIFY ALL DIMENSIONS FOR DOORS AND FRAMES.
6. THE FLOOR OR LANDING SHALL NOT BE MORE THAN 1/2" LOWER THAN THE THRESHOLD OF THE DOORWAY. BEVEL (1:2 MAX. SLOPE) WHERE THE THRESHOLD EXCEEDS 1/4" IN HEIGHT
7. RAISED THRESHOLDS AND FLOOR LEVEL CHANGES GREATER THAN 1/4-IN. AT DOORWAYS SHALL BE BEVELED WITH A SLOPE NOT GREATER THAN ONE UNIT VERTICAL IN TWO UNITS HORIZONTAL (50% SLOPE).
8. DOORS SHALL BE READILY OPENABLE FROM THE EGRESS SIDE WITHOUT THE USE OF A KEY OR SPECIAL KNOWLEDGE OR EFFORT
9. DOOR HARDWARE SET PER DOOR SCHEDULE AND SPECIFICATION. ALL HARDWARE LISTED IN THE HARDWARE SETS AND ITEMS NOTED AS "BY OTHERS" SHALL BE PROCURED AND INSTALLED AS PART OF THE GENERAL CONTRACT
10. ALL FIRE RATED DOORS MUST BE SELF OR AUTOMATIC CLOSING
11. WHEN A DOOR HAS A CLOSER, THE SWEEP PERIOD OF THE CLOSER SHALL BE ADJUSTED SO THAT FROM AN OPEN POSITION OF 70 DEGREES, THE DOOR WILL TAKE AT LEAST THREE SECONDS TO MOVE A POINT 3" FROM THE LATCH, MEASURED TO THE LANDING EDGE OF THE DOOR.
12. GLASS LITE DIMENSIONS ARE TO EDGE OF EXPOSED GLASS, LOUVER DIMENSIONS ARE TO EDGE OF EXPOSED LOUVER.
13. PROVIDE FLOOR MOUNTED DOOR STOPS AT ALL DOORS
14. FIELD VERIFY ALL OPENING DIMENSIONS FOR DOORS AND FRAMES
15. ALL MEANS OF EGRESS DOORS SHALL COMPLY WITH THE REQUIREMENTS OF SECTION 1008.1.
16. DOOR HARDWARE: HANDLES, PULLS, LATCHES, LOCKS AND OTHER OPERATING DEVICES ON ACCESSIBLE DOORS SHALL HAVE A SHAPE THAT IS EASY TO GRASP WITH ONE HAND AND DOES NOT REQUIRE TIGHT GRASPING, TIGHT PINCHING, OR TWISTING OF THE WRIST TO OPERATE.
17. EGRESS DOORS OR GATES SHALL BE OPENABLE FROM THE EGRESS SIDE WITHOUT THE USE OF A KEY, SPECIAL KNOWLEDGE, OR EFFORT. DOOR HANDLES, PULLS, LATCHES, LOCKS, AND OTHER OPERATING DEVICES SHALL BE INSTALLED 34 IN. ABOVE THE FINISHED FLOOR. MANUALLY OPERATED FLUSH BOLTS OR SURFACE BOLTS ARE NOT PERMITTED. THE UNLATCHING OF ANY DOOR OR LEAF SHALL NOT REQUIRE MORE THAN ONE OPERATION.
18. PROVIDE A SIGN AT THE TRANSOM WITH 1" HIGH LETTERS OF CONTRASTING COLOR TO THE BACKGROUND STATING "THIS DOOR TO REMAIN UNLOCKED DURING BUSINESS HOURS.
19. WIDTH AND HEIGHT OF REQUIRED EXIT DOORS SHALL COMPLY WITH CBC 1003.3.1 AND 1005.1.

ABBREVIATIONS

HM	HOLLOW METAL DOOR PER SPECIFICATION SECTION
GLASS/ALUM	ALUMINUM DOOR WITH GLASS OPENING PER SPECIFICATION
SCW	SOLID CORE WOOD DOOR PER SPECIFICATION
SGP	SEMI-GLOSS PAINT
FF	FACTORY FINISH, COLOR PER ARCHITECTS DIRECTION
ALUM	ALUMINUM
TG	TEMPERED GLAZING
TLG	TEMPERED AND LAMINATED GLASS
PT	PAINTED FINISH, COLOR PER ARCHITECTS DIRECTION SEE THE FINISH SCHEDULE FOR DOOR/WIDOW FINISHES

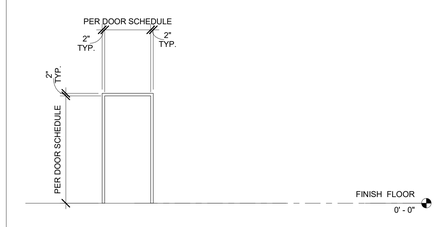

DOOR FRAME TYPES | 1/4" = 1'-0" | 2

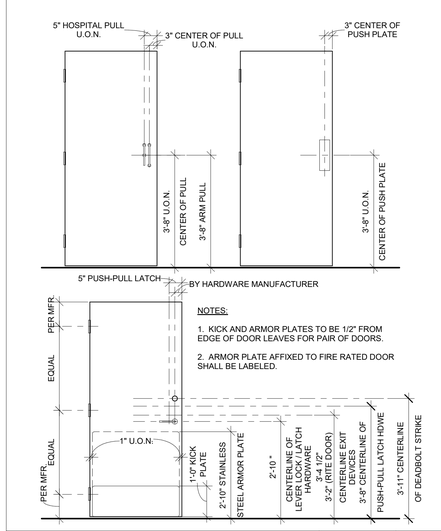

NOTES:

1. KICK AND ARMOR PLATES TO BE 1/2" FROM EDGE OF DOOR LEAVES FOR PAIR OF DOORS.
2. ARMOR PLATE AFFIXED TO FIRE RATED DOOR SHALL BE LABELED.

FINISH HARDWARE LOCATIONS | 1/2" = 1'-0" | 1

APPROVAL

CITY APPROVED BY:
DIRECTOR OF PUBLIC WORKS DATE
CITY REVIEWED BY:
SENIOR ENGINEER DATE
SUBMITTED BY:
DATE

CLIENT
LANCASTER
Creating a better tomorrow. Together.
CITY OF LANCASTER
44933 FERN AVENUE
LANCASTER, CA 93534

PROJECT NAME
SAMARITAN'S PURSE PARK FORMERLY KNOWN AS EL DORADO PARK RENOVATION
PWCP NO. 24-008
44501 5TH ST EAST
LANCASTER, CA 93535

ENGINEER/ARCHITECT
IDS
IDS GROUP
1 PETERS CANYON ROAD, SUITE 130
IRVINE, CA. 92606
TEL: 949-387-8500, FAX: 949-387-0800

STAMP
REGISTERED PROFESSIONAL ENGINEER
No. 75573
REN. 7-31-25
STATE OF CALIFORNIA

ISSUE

REV.	DESCRIPTION	DATE
	30% CD SET	12/15/23
	60% CD SET	01/12/24
	90% CD SET	02/26/24
1	CLIENT REVISIONS	04/26/24
2	BID SET	09/10/24
3	BULLETIN #1	10/25/24
4	BULLETIN #1 R1	2/14/25
	COMPOSITE SET	9/24/25

PROJECT IDENTIFICATION
THIS DRAWING WAS CREATED IN REVIT V. 2020 UNLESS OTHERWISE NOTED.
THE ORIGINAL SIZE OF THIS SHEET IS 30" X 42"
THESE DRAWINGS AND SPECIFICATIONS ARE THE PROPERTY AND COPYRIGHT OF IDS GROUP AND SHALL NOT BE USED ON ANY OTHER PROJECT OR LOCATIONS EXCEPT AS DESCRIBED ON THE DRAWINGS, WITHOUT THE WRITTEN AGREEMENT WITH IDS GROUP

IDS PROJECT NO.	22X099.03
IDS DRAWN BY	MJ
IDS CHECKED BY	MM
IDS APPROVED BY	JS

SHEET TITLE
SCHEDULE - DOOR & WINDOW AND DETAILS

SHEET NUMBER
A-910

IDS GROUP - FILE LOCATION: C:\Users\matthew.javaherian\Documents\22X099.01 LANC - El DORADO PARK (E) COMMUNITY CENTER RENOVATION_ARCH_MY2022_matthew.javaherianWKSP.rvt
PLOT DATE: 10/29/2024 4:32:22 PM
USER: Author

MASONRY

1. MASONRY (ASSEMBLY OF MASONRY UNITS, MORTAR, AND GROUT) SHALL HAVE A MINIMUM COMPRESSIVE STRENGTH OF 2,000 PSI. SPECIAL INSPECTION IS REQUIRED UNLESS OTHERWISE NOTED AND SHALL BE COMMON BOND CONSTRUCTION. COMPLY WITH ACI 530.
2. MASONRY UNITS SHALL BE GRADE N-1 MEDIUM WEIGHT UNIT CONFORMING TO ASTM C90 AND SHALL HAVE A MINIMUM AVERAGE COMPRESSIVE STRENGTH OF 2,000 PSI. USE DOUBLE OPEN END, BOND BEAM UNITS UNLESS OTHERWISE NOTED.
3. MORTAR SHALL BE TYPE S CEMENT LIME MORTAR CONFORMING TO ASTM C270 WITH A MINIMUM AVERAGE COMPRESSIVE STRENGTH OF 1,800 PSI.
4. GROUT SHALL CONFORM TO ASTM C476 AND SHALL HAVE A MINIMUM COMPRESSIVE STRENGTH OF 2,000 PSI.
5. AGGREGATES SHALL CONFORM TO ASTM C144 FOR MORTAR AND ASTM C404 FOR GROUT.
6. GROUT ALL CELLS SOLID. GROUT SHALL BE CONSOLIDATED BY MECHANICAL VIBRATION DURING PLACEMENT BEFORE LOSS OF PLASTICITY IN A MANNER TO FILL THE GROUT SPACE. USE LOW-LIFT GROUTED CONSTRUCTION (UNLESS OTHERWISE NOTED AND APPROVED BY THE ENGINEER). COMPLY WITH CBC MAXIMUM GROUT LIFT = 4 FT.
7. WHERE HIGH-LIFT GROUT CONSTRUCTION (SUSBJECT TO ACCEPTANCE BY ENGINEER) IS USED, CLEANOUT OPENINGS SHALL BE PRROVIDED IN EVERY CELL AT THE BOTTOM OF EACH POUR OF GROUT. COMPLY WITH CBC GROUT REQUIREMENTS.
8. THE SPACE BETWEEN MASONRY UNIT SURFACES AND REINFORCING STEEL SHALL BE A MINIMUM OF ONE BAR DIAMETER OF REINFORCEMENT.
9. NO PIPES OR DUCTS SHALL BE PLACED IN MASONRY WALLS UNLESS SPECIFICALLY NOTED OR DETAILED IN THE STRUCTURAL DRAWINGS.
10. ELECTRICAL CONDUIT MAY BE ROUTED IN CMU WALLS AS FOLLOWS:
    A. MAXIMUM SIZE AND QUANTITY OF CONDUIT PER CELL (EXCEPT AT JUNCTION BOXES) SHALL BE ONE - 1" DIAMETER OR (2) 3/4" DIAMETER (BUNDLED TOGETHER).
    B. CONDUIT SHALL NOT BE PLACED IN A MASONRY CELL CONTAINING REINFORCING.
    C. CONDUIT/PIPE/SLEEVES SHALL NOT BE PLACED IN THE PULASTER OR COLUMNS.
    D. CONDUIT SHALL BE PLACED AT THE CENTERLINE OF THE WALL.
    E. CONDUIT, PIPE, AND SLEEVES IN MASONRY SHALL BE NO CLOSER THAN 3 DIAMETERS ON CENTER.
11. ALL STRUCTURAL MASONRY WORK SHALL BE CONTINUOUSLY INSPECTED DURING LAYING AND GROUTING BY SPECIAL INSPECTOR SPECIFICALLY APPROVED BY THE ENFORCEMENT AGENCY FOR THAT PURPOSE.
12. MAXIMUM HEIGHT OF POUR IN ONE DAY = 8'-0".
13. SHOP DRAWINGS FOR REINFORCING STEEL SHALL INCLUDE PLACEMENT PLANS AND SECTIONS REFERENCED TO THE BAR LISTS. THE PLANS AND SECTIONS SHALL BE ADEQUATE TO DEFINE ALL BAR LOCATIONS. DO NOT REPRODUCE THE CONTRACT DRAWINGS.

POST-INSTALLED ANCHORAGE INTO MASONRY

1. POST-INSTALLED MECHANICAL ANCHORS INTO MASONRY SHALL BE SIMPSON STRONG-BOLT 2 (IAPMO ER-240), HILTI KWIK-BOLT TZ2 (ICC ESR-4561), OR EQUAL. INSTALL ANCHORS IN CONFORMANCE WITH THE ICC REPORT AND MANUFACTURER'S SPECIFICATIONS. COMPLY WITH ACI 530 AND CBC.
2. POST-INSTALLED ADHESIVE ANCHORS SHALL USE HILTI HIT-HY 200 (ICC ESR-3963), SIMPSON SET-XP (IAPMO ER-265) OR EQUAL FOR ROD DIAMETERS LESS THAN 3/4 INCH.
3. INSTALL ANCHORS PER THE MANUFACTURER'S PRINTED INSTALLATION INSTRUCTIONS, AS INCLUDED IN THE ANCHOR PACKAGING.
4. USE OF DIAMOND CORE BIT WITH ROUGHENING TOOL FOR ANCHOR HOLES REQUIRES APPROVAL FROM ENGINEER OF RECORD PRIOR TO DRILLING. UNLESS OTHERWISE SHOWN IN THE DRAWINGS, ALL HOLES SHALL BE DRILLED PERPENDICULAR TO THE CONCRETE SURFACE.
5. HOLES ARE ASSUMED TO BE DRY UNLESS OTHERWISE NOTED ON PLANS.
6. ACI/CRSI ADHESIVE ANCHOR INSTALLER CERTIFICATION IS REQUIRED FOR ALL INSTALLERS OF ADHESIVE ANCHORS IN HORIZONTAL OR UPWARDLY INCLINED ORIENTATION.
7. THE EFFECTIVE EMBEDMENT DEPTH FOR POST-INSTALLED ANCHORS SHALL BE AS NOTED ON THE DETAILS. FOR EXPANSION ANCHORS, REFER TO THE APPLICABLE EVALUATION REPORT FOR THE CORRESPONDING MINIMUM HOLE DEPTH AND NOMINAL EMBEDMENTS.
8. OVERHEAD ADHESIVE ANCHORS MUST BE INSTALLED USING THE HILTI PROFI PISTON PLUG SYSTEM OR APPROVED EQUAL.
9. ANCHOR CAPACITY IS DEPENDENT UPON SPACING BETWEEN ADJACENT ANCHORS AND PROXIMITY OF ANCHORS TO EDGE OF CONCRETE. INSTALL ANCHORS IN ACCORDANCE WITH SPACING AND EDGE CLEARANCES INDICATED ON THE DRAWINGS.
10. THE CONTRACTOR SHALL ARRANGE AN ANCHOR MANUFACTURER'S REPRESENTATIVE TO PROVIDE ONSITE INSTALLATION TRAINING FOR ALL ANCHOR PRODUCTS SPECIFIED. THE STRUCTURAL ENGINEER OF RECORD MUST RECEIVE DOCUMENTED CONFIRMATION THAT ALL PERSONNEL WHO INSTALL ANCHORS ARE TRAINED PRIOR TO THE COMMENCEMENT OF ANCHOR INSTALLATION.
11. CONTRACTOR SHALL DETERMINE LOCATION OF EXISTING REINFORCING STEEL PRIOR TO DRILLING FOR ANCHORS, AND DRILL THE ANCHOR HOLES TO CLEAR THE REINFORCING STEEL PER THESE NOTES. NO REINFORCING STEEL SHALL BE NICKED, CUT OR DAMAGED IN ANY WAY. DAMAGED REINFORCING WILL BE REPLACED BY THE CONTRACTOR AT NO ADDITIONAL COST. IF THE LOCATION OF ANCHORS MUST BE MOVED SLIGHTLY TO ACCOMMODATE THE LOCATION OF EXISTING REINFORCING STEEL, THE CONTRACTOR SHALL PREPARED A SLIGHTLY MODIFIED DESIGN OF THE ITEM TO BE ANCHORED AND SUBMIT TO THE ENGINEER FOR APPROVAL PRIOR TO FABRICATION. THE MODIFIED DESIGN SUGGESTED BY THE CONTRACTOR SHALL INVOLVE THE ABSOLUTE MINIMUM RELOCATION OF ANCHORS TO MEET THE DETAILS AND REQUIREMENTS HEREIN, AND SHALL BE BASED ON A TEMPLATE BY THE CONTRACTOR WHICH ACCURATELY PORTRAYS THE POSITION OF THE ANCHORS.
12. CONCTRACTOR TO ENSURE EXISTING CMU IS GROUTED PRIOR TO INSTALLATION OF ANY ANCHORS.
13. MAINTAIN A MINIMUM CLEARANCE OF 1-INCH BETWEEN THE REINFORCEMENT AND THE POST-INSTALLED ANCHOR.
14. ANCHORS SHALL BE INSTALLED A MINIMUM OF 1 3/8 INCH FROM ANY VERTICAL MORTAR JOINT.
15. ANCHOR LOCATIONS ARE LIMITED TO ONE PER MASONRY CELL, WITH A MINIMUM SPACING OF 8 INCHES ON CENTER.
16. EMBEDMENT SHALL BE MEASURED FROM THE OUTSIDE FACE OF THE CONCRETE MASONRY UNIT.
17. STAINLESS STEEL ANCHORS SHALL BE PROVIDED FOR EXTERIOR EXPOSURES.
18. CONTINUOUS SPECIAL INSPECTION IS REQUIRED.
19. CONTRACTOR SHALL BE RESPONSIBLE FOR SPECIAL INSPECTIONS PER CBC 1704.4. TEST POST-INSTALLED ANCHORS IN ACCORDANCE WITH THE CRITERIA SET FORTH IN CBC 1909.2.7. TEST LOADS SHALL BE IN ACCORDANCE WITH CBC 1909.2.7.4 METHOD 2 FOR ANCHORS WHICH ARE COVERED IN THE ABOVE TABLE.
20. PERIODIC SPECIAL INSPECTION IID REQUIRED FOR ALL POST INSTALLED ANCHORS IN CONCRETE. CONTINUOUS SPECIAL INSPECTION IS REQUIRED FOR ADHESIVE ANCHORS INSTALLED IN HORIZONTAL OR UPWARD INCLINED ORIENTATIONS TO RESIST SUSTAINED LOADING.

NON-SHRINK GROUT

1. NON-SHRINK GROUT SHALL BE CHEMREX MASTERFLOW 713 PLUS, OR SIKA SIKAGROUT 212, OR APPROVED EQUAL.
2. SURFACE PREPARATION SHALL FOLLOW MANUFACTURER'S SPECIFICATIONS. PROPER SURFACE CLEANING AND MOIST CURING ARE ESSENTIAL.
3. FOR POURABLE GROUT, CONSTRUCT FORMS TO RETAIN GROUT WITHOUT LEAKAGE. FORMS SHALL BE LINED OR COATED WITH BOND-BREAKER FOR EASY REMOVAL.
4. NON-SHRINK GROUT SHALL HAVE A MINIMUM COMPRESSIVE STRENGTH OF 5,000 PSI AT 28 DAYS.
5. REPAIR UNUSED CORED OR DRILLED HOLES BY FILLING WITH NON-SHRINK GROUT AT CONCRETE AND MASONRY. FINISH SURFACE TO MATCH THE ADJACENT CONDITION.

REINFORCING STEEL

1. ALL CONCRETE SHALL BE REINFORCED. REINFORCING STEEL SHALL BE NEW DEFORMED STEEL BARS CONFORMING TO ASTM A615, GRADE 60 UNLESS OTHERWISE NOTED.
2. ALL REINFORCING STEEL SHALL MEET THE FOLLOWING SPECIAL DUCTILITY REQUIREMENTS UNLESS OTHERWISE NOTED.
    A. THE ACTUAL YIELD STRENGTH SHALL NOT EXCEED THE SPECIFIED YIELD STRENGTH BY MORE THAN 18,000 PSI.
    B. THE RATIO OF THE ULTIMATE TENSILE STRESS TO THE ACTUAL YIELD STRENGTH SHALL NOT BE LESS THAN 1.25.
    C. REINFORCING STEEL CERTIFIED AS ASTM A706 MAY BE ASSUMED TO COMPLY WITH THESE REQUIREMENTS.
    D. SUBJECT TO THE ENGINEER'S WRITTEM APPROVAL, REINFORCING STEEL NOT MEETING THE SPECIAL DUCTILITY REQUIREMENTS SPECIFIED ABOVE MAY BE PERMITTED IN LOCATIONS NOT SUBJECT TO YIELDING UNDER SEISMIC LOAD, OR NEAR CONSTRUCTION JOINTS, OR OTHER LOCATIONS THAT COULD REQUIRE WELDABLE STEEL TO FACILITATE REPAIRS.
    E. FOR BIDDING PURPOSES, ASSUME ALL ASTM-A615 STEEL MUST COMPLY WITH NOTES 2A AND 2B ABOVE.
3. REINFORCING STEEL SHALL BE FIRMLY SUPPORTED AND ACCURATELY PLACED.
4. COMPLETE REINFORCING STEEL PLACEMENT DRAWINGS SHALL BE PREPARED IN ACCORDANCE WITH ACI BY THE CONTRACTOR AND REVIEWED BY THE ENGINEER AND SHALL BE AVAILABLE ON THE JOB SITE PRIOR TO PLACING OF CONCRETE.
5. ANCHOR BOLTS, DOWELS AND OTHER EMBEDDED ITEMS SHALL BE SECURELY TIED IN PLACE BEFORE CONCRETE IS PLACED.
6. ALL REINFORCING STEEL TO BE WELDED SHALL CONFORM TO ASTM A706, GRADE 60. DEFORMATIONS SHALL BE IN ACCORDANCE WITH ASTM A305.
7. ALL WELDING OF REINFORCING STEEL SHALL CONFORM TO AWS D1.4 AND SHALL BE PERFORMED BY CERTIFIED WELDERS USING AWS A5.5 E-90XX (TABLE 5.1, AWS D1.4) LOW HYDROGEN MOISTURE RESISTING ELECTRODES UNLESS OTHERWISE NOTED.
8. NO HEATING SHALL BE ALLOWED FOR BENDING OF REINFORCING STEEL.
9. TYPE 2 MECHANICAL COUPLERS WITH CURRENT ICC-ES EVALUATION REPORTS MAY BE USED AT THE CONTRACTOR'S DISCRETION IN LIEU OF LAP SPLICES, WELDING OR OTHER ACCEPTABLE MEANS FOR JOINING REINFORCING STEEL PROVIDING SUCH USE DOES NOT ADVERSELY AFFECT DESIGN INTENT, CODE REQUIREMENTS OR CONSTRUCTABILITY.
10. ALL MECHANICAL COUPLERS SHALL BE REVIEWED BY THE ENGINEER AND INSPECTED DURING CONSTRUCTION.
11. ALL REINFORCING STEEL INTERRUPTED BY STRUCTURAL STEEL SHALL TERMINATE WITHIN 1" OF THE STEEL SURFACE WITH A 90° STANDARD HOOK UNLESS OTHERWISE NOTED.

POST-INSTALLED ANCHORAGE INTO CONCRETE

1. ANCHORAGE SHALL BE INSTALLED PER MANUFACTURER'S WRITTEN INSTRUCTIONS, AND SHALL COMPLY WITH ACI 318 CHAPTER 17 AND CBC.
2. POST-INSTALLED ADHESIVE ANCHORS SHALL USE HILTI HIT-RE 500 V3 (ICC ESR-3814), SIMPSON SET-XP (ICC ESR-2508) OR EQUAL FOR ROD DIAMETERS LESS THAN 3/4 INCH, U.N.O.
3. INSTALL ANCHORS PER THE MANUFACTURER'S PRINTED INSTALLATION INSTRUCTIONS, AS INCLUDED IN THE ANCHOR PACKAGING.
4. USE OF DIAMOND CORE BIT WITH ROUGHENING TOOL FOR ANCHOR HOLES REQUIRES APPROVAL FROM ENGINEER OF RECORD PRIOR TO DRILLING. UNLESS OTHERWISE SHOWN IN THE DRAWINGS, ALL HOLES SHALL BE DRILLED PERPENDICULAR TO THE CONCRETE SURFACE.
5. HOLES ARE ASSUMED TO BE DRY UNLESS OTHERWISE NOTED ON PLANS.
6. ACI/CRSI ADHESIVE ANCHOR INSTALLER CERTIFICATION IS REQUIRED FOR ALL INSTALLERS OF ADHESIVE ANCHORS IN HORIZONTAL OR UPWARDLY INCLINED ORIENTATION.
7. THE EFFECTIVE EMBEDMENT DEPTH FOR POST-INSTALLED ANCHORS SHALL BE AS NOTED ON THE DETAILS. FOR EXPANSION ANCHORS, REFER TO THE APPLICABLE EVALUATION REPORT FOR THE CORRESPONDING MINIMUM HOLE DEPTH AND NOMINAL EMBEDMENTS.
8. OVERHEAD ADHESIVE ANCHORS MUST BE INSTALLED USING THE HILTI PROFI PISTON PLUG SYSTEM OR APPROVED EQUAL.
9. ANCHOR CAPACITY IS DEPENDENT UPON SPACING BETWEEN ADJACENT ANCHORS AND PROXIMITY OF ANCHORS TO EDGE OF CONCRETE. INSTALL ANCHORS IN ACCORDANCE WITH SPACING AND EDGE CLEARANCES INDICATED ON THE DRAWINGS.
10. THE CONTRACTOR SHALL ARRANGE AN ANCHOR MANUFACTURER'S REPRESENTATIVE TO PROVIDE ONSITE INSTALLATION TRAINING FOR ALL ANCHOR PRODUCTS SPECIFIED. THE STRUCTURAL ENGINEER OF RECORD MUST RECEIVE DOCUMENTED CONFIRMATION THAT ALL PERSONNEL WHO INSTALL ANCHORS ARE TRAINED PRIOR TO THE COMMENCEMENT OF ANCHOR INSTALLATION.
11. THE CONTRACTOR SHALL PREPARE A WRITTEN PROCEDURE PRIOR TO CONSTRUCTION FOR AN INSTALLATION METHOD TO AVOID DRILLING INTO OR CONTACTING IN ANY WAY REINFORCING STEEL AND OTHER EMBEDDED ITEMS. APPROVED METHODS COULD INCLUDE PLASTIC MARKINGS FORMED INTO THE CONCRETE SURFACE, OR USE OF GROUND PENETRATING RADAR EQUIPMENT SUCH AS HILTI FERROSCAN PS300. ANCHORS SHALL CLEAR EXISTING REBAR BY 1" MIN.
12. CONFORM WITH ICC RECOMMENDED VALUES FOR ANCHOR SPACING AND EDGE DISTANCE TO DEVELOP FULL (100%) ALLOWABLE TENSION/SHEAR LOADS LISTED IN ICC REPORTS. DO NOT USE REDUCED SPACING AND EDGE DISTANCE UNLESS SPECIFICALLY NOTED OTHERWISE BY THE DETAILS.
13. DRILLED HOLE SHALL BE CLEANED WITH A BRUSH AND CLEAN COMPRESSED AIR IN COMPLIANCE WITH ICC ESR REQUIREMENTS.
14. CONTRACTOR SHALL DETERMINE LOCATION OF EXISTING REINFORCING STEEL PRIOR TO DRILLING FOR ANCHORS, AND DRILL THE ANCHOR HOLES TO CLEAR THE REINFORCING STEEL PER THESE NOTES. NO REINFORCING STEEL SHALL BE NICKED, CUT OR DAMAGED IN ANY WAY. DAMAGED REINFORCING WILL BE REPLACED BY THE CONTRACTOR AT NO ADDITIONAL COST. IF THE LOCATION OF ANCHORS MUST BE MOVED SLIGHTLY TO ACCOMMODATE THE LOCATION OF EXISTING REINFORCING STEEL, THE CONTRACTOR SHALL PREPARED A SLIGHTLY MODIFIED DESIGN OF THE ITEM TO BE ANCHORED AND SUBMIT TO THE ENGINEER FOR APPROVAL PRIOR TO FABRICATION. THE MODIFIED DESIGN SUGGESTED BY THE CONTRACTOR SHALL INVOLVE THE ABSOLUTE MINIMUM RELOCATION OF ANCHORS TO MEET THE DETAILS AND REQUIREMENTS HEREIN, AND SHALL BE BASED ON A TEMPLATE BY THE CONTRACTOR WHICH ACCURATELY PORTRAYS THE POSITION OF THE ANCHORS.
15. WHILE ANCHORING STEEL MEMBERS AGAINST CONCRETE, PROVIDE LOCK-WASHER AND NUT AT EACH ANCHOR ROD.
16. CONCRETE SCREW ANCHORS MAY BE HILTI KH-EZ (ICC ESR-3027), SIMPSON TITEN HD SCREW ANCHORS (ICC ESR-2713), RED HEAD TAPCON+ SCREW ANCHOR (ICC ESR-3699), OR AN EQUIVALENT PRODUCT ACCEPTABLE TO ENGINEER. AT ENDS OF LATERAL SEISMIC BRACING, USE EXPANSION BOLTS IN LIEU OF SCREW ANCHORS.
17. TEST POST-INSTALLED ANCHORS IN CONCRETE PER CBC. TENSION-TEST BOLTS TO TWICE THE ALLOWABLE TENSION VALUE LISTED IN THE APPLICABLE ICC REPORT FOR BOLTS OF THE SAME DIAMETER. TEST 100-PERCENT OF BOLTS USED FOR STRUCTURAL APPLICATIONS. TEST 50-PERCENT OF BOLTS USED FOR NON-STRUCTURAL APPLICATIONS SUCH AS EQUIPMENT ANCHORAGE, INCLUDING HALF OF THE BOLTS IN EACH GROUP. TEST 10-PERCENT OF BOLTS USED FOR SILL-PLATE BOLTING APPLICATIONS.
18. ALL BOLTS AND ANCHORS (INCLUDING NUTS AND WASHERS) EXPOSED TO WEATHER SHALL BE STAINLESS STEEL.
19. PERIODIC SPECIAL INSPECTION IID REQUIRED FOR ALL POST INSTALLED ANCHORS IN CONCRETE. CONTINUOUS SPECIAL INSPECTION IS REQUIRED FOR ADHESIVE ANCHORS INSTALLED IN HORIZONTAL OR UPWARD INCLINED ORIENTATIONS TO RESIST SUSTAINED LOADING.

EXPANSION BOLTS IN CRACKED (AND UNCRACKED CONCRETE)

ACCEPTABLE PRODUCTS	ICC-ES EVALUATION REPORT
HILTI - KWIK BOLT TZ2	ESR-4266
SIMPSON - STRONG-BOLT 2	ESR-3037
AN EQUIVALENT PRODUCT ACCEPTABLE TO ENGINEER	

ANCHORS MUST ATTAIN SPECIFIED TORQUE WITHIN 1/2 TURN OF NUT

ADHESIVE ANCHOR SYSTEM FOR THREADED ROD OR REBAR IN CONCRETE

ACCEPTABLE PRODUCTS	ICC-ES EVALUATION REPORT
HILTI HIT - RE 500 V3	ESR-3814
SIMPSON - SET-XP	ESR-2508
AN EQUIVALENT PRODUCT ACCEPTABLE TO ENGINEER	

CONCRETE SCREW ANCHORS

ACCEPTABLE PRODUCTS	ICC-ES EVALUATION REPORT
HILTI KH-EZ	ESR-3027
SIMPSON TITEN HD SCREW ANCHORS	ESR-2713
RED HEAD TAPCON+ SCREW ANCHORS	ESR-3699
AN EQUIVALENT PRODUCT ACCEPTABLE TO ENGINEER	

DESIGN CRITERIA

DESIGN CONFORMS TO THE 2022 CALIFORNIA BUILDING CODE WITH CITY OF LANCASTER AMENDMENTS.

1. DEAD LOADS:
   - ROOF: 28 PSF - SELF WEIGHT OF MATERIALS
2. LIVE LOADS:
   - ROOF: 20 PSF
3. WIND ANALYSIS: WIND LOADS ARE BASED ON CBC WITH THE FOLLOWING FACTORS:
   - EXPOSURE CATEGORY = C
   - V = 95 MPH
   - V_{asd} = 74 MPH
   - GCpi = ± 0.85
   - Kzt = 1.0
   - RISK CATEGORY = II
4. SEISMIC ANALYSIS: EQUIVALENT LATERAL FORCE PROCEDURE
   - SITE CLASS = D
   - SEISMIC DESIGN CATEGORY = D
   - RISK OCCUPANCY CATEGORY = II
   - I_e = 1.0
   - S_S = 1.500 g
   - S_1 = 0.600 g
   - Fa = 1.000
   - Fv = 1.700
   - S_{DS} = 1.000 g
   - S_{D1} = 0.680 g

   WOOD SHEAR WALLS
   - R = 6.5
   - Ω = 3.0
   - Cd = 4.0
   - C_S = 0.15

CAST-IN-PLACE CONCRETE

1. CONCRETE SHALL BE MIXED, PLACED AND CURED IN ACCORDANCE WITH ACI 318, LATEST EDITION, AND PROJECT SPECIFICATIONS.
2. PORTLAND CEMENT SHALL BE TYPE II UNLESS OTHERWISE NOTED.
3. FLY ASH OR OTHER POZZOLANS CONFORMING TO ASTM C818 CLASS N OR F MAY BE USED AS A PARTIAL SUBSTITUTION FOR PORTLAND CEMENT UP TO A MAXIMUM OF 25% TOTAL CEMENTITIOUS MATERIALS BY WEIGHT IF THE MIX DESIGN IS PROPORTIONED BY METHOD B OR C.
4. ALL CONCRETE SHALL BE NORMAL WEIGHT (145 PCF) HARD ROCK TYPE.
5. AGGREGATES IN NORMAL WEIGHT CONCRETE SHALL CONFORM TO ASTM C-33 (HARDROCK).
6. CONCRETE MIXING OPERATIONS, ETC. SHALL CONFORM TO ASTM C94.
7. CONCRETE SHALL HAVE A MINIMUM COMPRESSIVE STRENGTH (f'c) AT 28 DAYS AS FOLLOWS.
   A. FOUNDATION, FOOTINGS: 4,000 PSI
   B. SLABS ON GRADE: 4,000 PSI
8. COMPRESSIVE STRENGTH TEST REPORTS SHALL BE SUBMITTED TO THE ENGINEER.
9. CONCRETE MIXES SHALL BE DESIGNED BY A QUALIFIED TESTING LABORATORY, BEARING A REGISTERED CALIFORNIA CIVIL ENGINEER'S STAMP, AND REVIEWED BY THE ENGINEER PRIOR TO USE.
10. MAXIMUM RATIO OF WATER TO CEMENTITIOUS MATERIALS, BY WEIGHT, SHALL BE 0.45 UNLESS OTHERWISE NOTED. USE MINIMUM 6 SACKS OF CEMENT PER CUBIC YARD OF CONCRETE.
11. IF RECOMMENDED BY THE GEOTECHNICAL REPORT, ALL CONCRETE MIXES SHALL CONTAIN A CORROSION INHIBITING ADMIXTURE. THE FOLLOWING PRODUCTS, DCI S BY GRACE AND CNI BY SIKA, OR APPROVED EQUAL, ARE ACCEPTABLE.
12. ALL CONSTRUCTION JOINTS SHALL BE KEYED, ROUGHENED, THOROUGHLY CLEANED, AND WETTED WITH NO STANDING WATER. ROUGHENING SHALL BE PER NOTE 16 BELOW.
13. THE CONTRACTOR SHALL SUBMIT THE PROPOSED LOCATION OF ALL CONSTRUCTION JOINTS TO THE ENGINEER FOR REVIEW PRIOR PLACING OF CONCRETE. JOINTS SHALL BE LOCATED TO MINIMIZE EFFECTS OF SHRINKAGE AS WELL AS PLACED AT POINTS OF LOW STRESS.
14. CONCRETE COVERAGE OF REINFORCING STEEL SHALL BE AS FOLLOWS, UNLESS OTHERWISE NOTED:
    A. CONCRETE CAST AGAINST AND PERMANENTLY EXPOSED TO EARTH: 3"
    B. CONCRETE EXPOSED TO EARTH OR WEATHER:
       * #6 THROUGH #18 REBAR: 2"
       * #5 REBAR, W31 OR D31 WIRE, AND SMALLER: 1 1/2"
    C. CONCRETE NOT EXPOSED TO WEATHER OR IN CONTACT WITH GROUND:
       * SLABS, WALLS AND JOISTS (#11 REBAR AND SMALLER): 3/4"
       * BEAMS AND COLUMNS: 1 1/2"
    D. SLABS-ON-GRADE:
       TOP REINF.: 2" U.N.O.
       BOTTOM REINF.: 3" U.N.O.
15. ALL EXPOSED CONCRETE EDGES SHALL BE FORMED WITH A 3/4" CHAMFER UNLESS OTHERWISE NOTED.
16. ALL NEW CONCRETE PLACED AGAINST HARDENED CONCRETE SHALL BE PREPARED PER THE FOLLOWING PROCEDURE:
    A. ROUGHEN HARDENED SURFACE TO AN AMPLITUDE OF 1/4" WITH BUSH HAMMER, SAND BLASTING, OR OTHER APPROVED METHOD. SURFACE ROUGHNESS SHALL BE NO LESS ROUGH THAN THAT REPRESENTED BY ICRI CSP6.
    B. CLEAN SURFACES OF DUST AND DEBRIS USING CLEAN COMPRESSED AIR AND WATER.
    C. SURFACE SHALL BE WETTED AND STANDING WATER REMOVED.
    D. REFER TO OTHER NOTES FOR DUST CONTROL DURING CONSTRUCTION.
    E. BONDING AGENTS ARE NOT AN ACCEPTABLE ALTERNATIVE TO THESE PROCEDURES.
17. CURING COMPOUND USED ON CONCRETE SHALL BE REVIEWED BY THE ENGINEER.
18. BONDING AGENT SHALL BE CHEMREX CONCRESIVE LIQUID LPL, OR SIKA ARMATEC 110 EPOCEM, OR APPROVED EQUAL AND SHALL BE APPLIED FOLLOWING THE MANUFACTURER'S RECOMMENDATIONS. UNLESS SHOWN ON THE DRAWINGS, BONDING AGENTS SHALL NOT BE USED WITHOUT PRIOR APPROVAL BY THE ENGINEER.
19. THE NOMINAL MAXIMUM SIZE OF COARSE AGGREGATES SHALL BE 1" UNLESS OTHERWISE NOTED.
20. ALL CRACKS WIDER THAN 1/16" IN NEW CONCRETE APPEARING WITHIN 6 MONTHS OF CONCRETE PLACEMENT SHALL BE REPAIRED USING EPOXY ADHESIVE INJECTION BY THE CONTRACTOR AT NO COST TO THE OWNER.
21. NO PIPE OF ANY TYPE MAY RUN HORIZONTALLY IN SOLID CONCRETE SLABS OR IN CONCRETE POURED OVER METAL DECK. CONDUIT FOR LOW AND HIGH VOLTAGE ELECTRICAL SERVICE MAY RUN HORIZONTALLY IN THESE ITEMS IN ACCORDANCE WITH THE REQUIREMENTS OF THIS PROJECT AND ACI 318.

SOILS AND FOUNDATIONS

1. GEOTECHNICAL DESIGN REPORT: REFER TO
   ASSOCIATED SOILS ENGINEERING, INC.
   2860 WALNUT AVENUE
   SIGNAL HILL, CA 92606
   PROJECT NO. : 7111.23
   REPORT REF.: REPORT OF GEOTECHNICAL INVESTIGATION
   APRIL 17, 2023
2. THE CONTRACTOR SHALL COMPLY WITH ALL RECOMMENDATIONS OF THE GEOTECHNICAL REPORT, INCLUDING THOSE FOR OVER-EXCAVATION, BACKFILL, ENGINEERED FILL, TEMPORARY EXCAVATIONS AND SHORING. SEE NOTE 5 FOR GEOTECHNICAL FIELD INSPECTION.
3. THE CONTRACTOR SHALL VERIFY THAT THE GEOTECHNICAL ENGINEER HAS REVIEWED ALL CONTRACTOR SUBMITTALS AND CONSTRUCTION PROCEDURES RELATED TO THE GEOTECHNICAL WORK PRIOR TO COMMENCING WORK.
4. A COPY OF THE GEOTECHNICAL REPORT SHALL BE MAINTAINED ON-SITE BY THE GENERAL CONTRACTOR AND BY EACH SUBCONTRACTOR PERFORMING WORK RELATED TO SOILS, FOUNDATIONS SLABS-ON-GRADE, BASEMENT WALLS AND RETAINING WALLS.
5. ALL FOUNDATION EXCAVATION WORK AND SOIL COMPACTION SHALL BE INSPECTED AND APPROVED BY THE GEOTECHNICAL ENGINEER PRIOR TO PLACEMENT OF ANY REINFORCING STEEL OR CONCRETE.
6. SOIL ALLOWABLE BEARING PRESSURE:
   ISOLATED PAD / CONTINUOUS FOUNDATION = 1,800 PSF
   A. LOCATE BOTTOMS OF FOOTING 1'-0" MINUMUM BELOW LOWEST ADJACENT GRADE.
   B. MINIMUM FOOTING WIDTH: WALL FOOTING = 1'-0", PAD FOOTING = 1'-6".
   C. ALLOWABLE BEARING CAN BE INCREASED BY 400 PSF FOR EACH ADDITIONAL FOOT OF EMBEDMENT BEYOND THE INITIAL 12 INCHES AND BY 200 PSF FOR EACH ADDITIONAL 12 INCHES OF WIDTH BEYOND THE INITIAL 12 INCHES TO A MAXIMUM OF 3,500 PSF.
   D. SHORT TERM STATIC SETTLEMENT = 0.25 INCH OVER 30 FEET
   E. THE ALLOWABLE BEARING PRESSURE MAY BE INCREASED BY ONE-THIRD FOR SEISMIC OR WIND LOAD CASES.
7. SOIL LATERAL LOADS, COEFFICIENTS, AND ALLOWABLE SOIL PRESSURES:
   A. LATERAL RESISTANCE:
      a. 0.40 FRICTION COEFFICIENT BETWEEN FOOTINGS AND SUPPORTING SOIL.
      b. PASSIVE PRESSURE 220 PCF < 2,200 PSF MAXIMUM
      c. FRICTION AND PASSIVE PRESSURE MAY BE COMBINED WITH A 1/3 REDUCTION IN PASSIVE PRESSURE.
8. THE BOTTOMS OF COMPLETED EXCAVATIONS SHALL BE OBSERVED BY THE PROJECT GEOTECHNICAL ENGINEER WHILE THEY ARE PROOF ROLLED WITH LOADED EQUIPMENT. ANY LOOSE OR YIELDING SOILS SHALL BE OVEREXCAVATED AND RECOMPACTED TO THE LIMITS DETERMINED BY THE PROJECT GEOTECHNICAL ENGINEER.
9. REFER TO GEOTECHNICAL REPORT FOR OVEREXCAVATION AND RECOMPACTION REQUIREMENTS AT FOOTINGS AND SLAB-ON-GRADE. TO MITIGATE POTENTIAL FOR CHANGES IN MOISTURE CONTENT OF SOILS BELOW FOUNDATION:
   A. DRAIN SURFACE AWAY FROM STRUCTURE, AND DIVERT SURFACE WATER DRAINING TOWARD THE STRUCTURE.
   B. LOCATE WATER SOURCES AWAY FROM BUILDING FACES.
10. EXCAVATIONS FOR FOUNDATIONS MUST BE ACCEPTED BY THE GEOTECHNICAL ENGINEER PRIOR TO PLACING REINFORCING STEEL AND CONCRETE. NOTIFY THE GEOTECHNICAL ENGINEER WHEN FOUNDATIONS ARE READY FOR INSPECTION.
11. PORTIONS OF THE BACKFILL MAY BE CONTROLLED LOW STRENGTH MATERIALS PER ACI 229. CONTRACTOR TO SUBMIT LOCATIONS TO THE GEOTECHNICAL ENGINEER FOR ACCEPTANCE PRIOR TO PROCEEDING WITH THE WORK.
12. ALL PORTIONS OF THE WORK PERTAINING TO EXCAVATIONS, FOUNDATIONS AND RETAINING WALLS SHALL CONFORM TO CBC CHAPTER 18. SPECIAL INSPECTIONS AND STRUCTURAL TESTING SHALL CONFORM TO CBC CHAPTER 17.
13. THE CONTRACTOR SHALL PROVIDE FOR THE DESIGN, APPROVALS, PERMITS, INSTALLATION AND MONITORING OF ALL CRIBBING, SHEATHING AND SHORING REQUIRED TO SAFELY RETAIN TEMPORARY EXCAVATIONS.
14. THE CONTRACTOR IS SOLELY RESPONSIBLE FOR EXCAVATION PROCEDURES INCLUDING LAGGING, SHORING, UNDERPINNING AND PROTECTION OF EXISTING CONSTRUCTION. SUBMIT SHORING DESIGN TO THE GEOTECHNICAL ENGINEER FOR REVIEW.
15. LOCATE AND PROTECT EXISTING UTILITIES TO REMAIN DURING AND/OR AFTER CONSTRUCTION.

SCOPE OF WORK

THIS PROJECT CONSISTS OF EL DORADO PARK IMPROVEMENTS INVOLVING CONSTRUCTION OF NEW SINGLE STORY COMMUNITY CENTER BUILDING, SHADE CANOPIES, PUMP HOUSE STRUCTURE AND SKATE PARK.

GENERAL NOTES

1. REFER TO PROJECT SPECIFICATIONS FOR PROJECT REQUIREMENTS.
2. ALL CONSTRUCTION AND WORKMANSHIP, INCLUDING MATERIALS, SHALL CONFORM TO THESE DRAWINGS AND THE CBC.
3. GOVERNING CODE AUTHORITY: CITY OF LANCASTER.
4. COMPLY FULLY WITH ALL CODES HAVING JURISDICTION OVER THE WORK. IF ANY WORK SHOWN OR INDICATED ON THE DRAWINGS IS IN CONFLICT WITH ANY CODE HAVING JURISDICTION, BRING IT TO THE ATTENTION OF THE OWNER PRIOR TO THE COMMENCEMENT OF ANY WORK WHICH WOULD BE AFFECTED BY IT.
5. WHERE NOT INDICATED OTHERWISE, THE LAT

ABBREVIATIONS

@	AT
&	AND
A.B.	ANCHOR BOLT
ABV.	ABOVE
ADD'L. (ADDL.)	ADDITIONAL
ADJ.	ADJACENT
ALT.	ALTERNATE
ALUM.	ALUMINUM
APPRX. (APPROX.)	APPROXIMATE(LY)
ARCH.	ARCHITECT(URAL)
BLDG.	BUILDING
BLKG.	BLOCKING
BLW.	BELOW
BM.	BEAM
BNDRY.	BOUNDARY
B.O.C.	BOTTOM OF CONCRETE
B.O.F.	BOTTOM OF FOOTING
BOT. (B)	BOTTOM
BRCG.	BRACING
BRDG.	BRIDGE (ING)
BRG.	BEARING
BTWN.	BETWEEN
CAMB. (C)	CAMBER(ED)
CANT.	CANTILEVER(ED)
C.F.	CUBIC FEET (FOOT)
C.I.P.	CAST-IN-PLACE
C.I.D.H.	CAST-IN-DRILLED HOLE
C.J.	CONTROL JOINT; CONSTRUCTION JOINT
C.L. (℄)	CENTER LINE
CLG.	CEILING
CLR.	CLEAR
COL.	COLUMN
CONC.	CONCRETE
CONN.	CONNECTION
CONST.	CONSTRUCTION
CONT.	CONTINUOUS
C.P.	COMPLETE-PENETRATION
CTSK.	COUNTERSINK
CTR.	CENTER(ED)
C.Y.	CUBIC YARD
DBA	DEFORMED BAR ANCHOR
DBL.	DOUBLE
DEPT.	DEPARTMENT
DIA. (Ø)	DIAMETER
DIAG.	DIAGONAL
DIAPH.	DIAPHRAGM
DIM.	DIMENSION
DN.	DOWN
DO	DITTO (REPEAT)
DWG. (DWGS.)	DRAWING(S)
DWL.	DOWEL
EA.	EACH
E.F.	EACH FACE
E.J.	EXPANSION JOINT
EL.	ELEVATION
ELEC.	ELECTRICAL
ELEV.	ELEVATOR
EMB.	EMBED(MENT)
ENG.	ENGINEER
EPS	EXPANDED POLYSTYRENE (FOAM)
EQ.	EQUAL
EQPT.	EQUIPMENT
EQUIV.	EQUIVALENT
EXP.	EXPANSION
EXIST. (E)	EXISTING
EXT.	EXTERIOR
FDN.	FOUNDATION
FIN.	FINISH(ED)
FLR.	FLOOR
F.O.C.	FACE OF CONCRETE
F.O.M.	FACE OF MASONRY
F.O.S.	FACE OF STUD
F.O.W.	FACE OF WALL
F.P.	FULL (COMPLETE) PENETRATION
F.S.	FAR SIDE
FT. (')	FOOT (FEET)
FTG.	FOOTING
F.V.	FIELD VERIFY
GA.	GAUGE
GALV.	GALVANIZE(D)
GRD.	GRADE
GYP.	GYPSUM
HD.	HOLDOWN; HAND
HDR.	HEADER
HGR.	HANGER
HORIZ. (H)	HORIZONTAL
H.S.	HEADED STUD
H.S.B.	HIGH STRENGTH BOLT
HT.	HEIGHT
I.D.	INSIDE DIAMETER
IN. (")	INCH(ES)
INFO.	INFORMATION
JST.	JOIST
JT.	JOINT
K	KIPS; 1000
K.P.	KING POST
LAT.	LATERAL
L.B.	LAG BOLT
LB (#)	POUND
L.F.	LINEAL FEET (FOOT)
LLH	LONG LEG HORIZONTAL
LLV	LONG LEG VERTICAL
LT. WT.	LIGHT WEIGHT
MAX.	MAXIMUM
M.B.	MACHINE BOLT
MECH.	MECHANICAL
M.E.P.	MECHANICAL, ELECTRICAL AND PLUMBING
MEZZ.	MEZZANINE
MFR.	MANUFACTURER
MIN.	MINIMUM
MISC.	MISCELLANEOUS
MTL.	METAL
(N)	NEW
NO. (#)	NUMBER
N.S.	NEAR SIDE
N.T.S.	NOT TO SCALE
O/C (O.C.)	ON CENTER
O.D.	OUTSIDE DIAMETER
O.H.	OPPOSITE HAND
OPNG.	OPENING
OPP.	OPPOSITE
ORTHO.	ORTHOGONAL
O.W.J.	OPEN WEB JOIST
PC	PILE CAP
PCF	POUNDS PER CU.FT.
PL.	PLATE
P.P.	PARTIAL-PENETRATION
P.S.F.	POUNDS PER SQUARE FOOT
P.S.I.	POUNDS PER SQUARE INCH
QTY.	QUANTITY
RAD. (R)	RADIUS
RBS	REDUCED BEAM SECTION
REF.	REFERENCE
REINF.	REINFORCEMENT (ING)
REQ'D. (REQD.)	REQUIRED
RF.	ROOF
R.O.	ROUGH OPENING
S.A.D.	SEE ARCHITECTURAL DRAWINGS
SC	SLIP-CRITICAL
S.C.D.	SEE CIVIL DRAWINGS
SCH.	SCHEDULE
SEP.	SEPARATION
SHT.	SHEET
SIM.	SIMILAR
SKW.	SKEW(ED)
SLRS	SEISMIC LOAD RESISTING SYSEM
S.O.G.	SLAB-ON-GRADE
SPEC.	SPECIFICATION
SQ.	SQUARE
ST	SNUG-TIGHTENED
STD.	STANDARD
STAGG.	STAGGER(ED)
STIFF.	STIFFENER
STIR.	STIRRUP
STL.	STEEL
STRUC(T).	STRUCTURAL
SUSP.	SUSPENDED
SYMM.	SYMMETRICAL
T&B	TOP AND BOTTOM
TEMP.	TEMPORARY
THK.	THICK(NESS)
T.O.	TOP OF
T.O.C.	TOP OF CONCRETE
T.O.S.	TOP OF STEEL; TOP OF SHEATHING
T.O.W.	TOP OF WALL
TRANS.	TRANSVERSE
T.S.G.	TAPERED STEEL GIRDER
TYP.	TYPICAL
U.O.N. (U.N.O.)	UNLESS OTHERWISE NOTED
UTIL.	UTILITY
VERT. (V)	VERTICAL
V.I.F.	VERIFY IN FIELD
W/	WITH
(W)	WIDE; WIDTH
W.P.	WORK POINT
WT.	WEIGHT
W.W.F.	WELDED WIRE FABRIC
X-STG	EXTRA STRONG

STRUCTURAL OBSERVATIONS

1. THE OWNER SHALL EMPLOY THE ENGINEER OF RECORD REGISTERED/LICENSED IN THE STATE OF CALIFORNIA WHO IS RESPONSIBLE FOR THE STRUCTURAL DESIGN, TO DO STRUCTURAL OBSERVATION.
2. THE STRUCTURAL OBSERVATION IS REQUIRED FOR THE STRUCTURAL SYSTEM IN ACCORDANCE WITH CBC 2016, SECTION 1704. STRUCTURAL OBSERVATION IS THE VISUAL OBSERVATION OF THE ELEMENTS AND CONNECTIONS OF THE STRUCTURAL SYSTEM AT SIGNIFICANT CONSTRUCTION STAGES AND THE COMPLETE STRUCTURE FOR GENERAL CONFORMANCE TO THE APPROVED PLANS AND SPECIFICATIONS. STRUCTURAL OBSERVATION DOES NOT WAIVE THE RESPONSIBILITY FOR THE INSPECTIONS REQUIRED OF THE PROJECT INSPECTOR, DEPUTY INSPECTOR, SPECIAL INSPECTOR OR CITY INSPECTOR.
3. STRUCTURAL OBSERVER OF RECORD : SAID HILMY, S3680
4. THE STRUCTURAL OBSERVER SHALL PERFORM SITE VISITS AT THOSE STEPS IN THE PROGRESS OF THE CONSTRUCTION THAT ALLOW FOR CORRECTION OF DEFICIENCIES WITHOUT SUBSTANTIAL EFFORT OR UNCOVERING OF THE WORK INVOLVED. AT A MINIMUM, THE FOLLOWING SIGNIFICANT CONSTRUCTION STAGES REQUIRE A SITE VISIT AND AN OBSERVATION REPORT FROM THE STRUCTURAL OBSERVER.

   CONSTRUCTION STAGE ELEMENTS / CONNECTIONS TO BE OBSERVED:

   A. AFTER PLACEMENT OF ALL REBARS AND HOLDOWN ANCHORS AND BEFORE POURING CONCRETE
   B. MASONRY WALL REBAR
   C. WALLS AND ROOF: AFTER STRUCTURE IS ERECTED AND BEFORE INSULATION AND LEVELING IS INSTALLED
   D. PUNCH WALK: AFTER ALL STRUCTURAL ITEMS ARE COMPLETED
5. STRUCTURAL OBSERVATION: ALL STRUCTURAL OBSERVATIONS SHALL BE DOCUMENTED USING THE CITY OF DANA POINT STRUCTURAL OBSERVATION REPORT FORM, AND SHALL BE STAMPED AND SIGNED BY THE STRUCTURAL OBSERVER OF RECORD.
6. OBSERVED DEFICIENCIES: ANY OBSERVED DEFICIENCIES SHALL BE DESCRIBED ON THE FORM; THE OBSERVER SHALL ALSO INDICATE WHETHER A RE-OBSERVATION IS REQUIRED TO VERIFY CORRECTIVE ACTIONS HAVE BEEN PROPERLY TAKEN OR THAT THE CORRECTIVE ACTIONS ARE DEEMED VERIFIABLE BY THE SPECIAL INSPECTOR OR CITY INSPECTOR PRIOR TO INSPECTION APPROVAL.
7. FAILURE TO NOTIFY ARCHITECT/ENGINEER OF ANY CONSTRUCTION MILESTONE MAY RESULT IN CONTRATOR HAVING TO REMOVE WORK FOR THE PURPOSE OF REVIEW AT CONTRATOR'S EXPENSE.
8. PREMATURE NOTIFICATION FOR SITE VISIT WILL RESULT IN AN ADDITIONAL SITE VISIT WITH ALL EXPENSES AND FEES PAID BY THE CONTRACTOR.

DEFERRED SUBMITTALS

STRUCTURAL MEMBERS	SUPPLIERS
SHADE CANOPIES AND THEIR FOUNDATIONS	USA SHADE OR APPROVED EQUAL

NOTES:
1. DOCUMENTS FOR DEFERRED SUBMITTAL ITEMS SHALL BE PROVIDED TO THE ARCHITECT AND / OR ENGINEER OF RECORD FOR APPROVAL PRIOR TO FABRICATION.
2. THE DEFERRED SUBMITTAL ITEMS SHALL NOT BE INSTALLED UNTIL THEY HAVE BEEN APPROVED BY THE BUIDLING OFFICIAL.

STRUCTURAL STEEL

1. THE CONTRACTOR SHALL SUBMIT ALL STRUCTURAL STEEL AND MISCELLANEOUS STEEL SHOP DRAWINGS TO THE ENGINEER FOR REVIEW PRIOR TO FABRICATION.
2. STEEL MATERIALS SHALL CONFORM TO THE FOLLOWING, UNLESS OTHERWISE NOTED:
   A. CHANNELS, ANGLES, PLATES AND BARS: ASTM A36 (Fy=36ksi, Fu=58ksi)
   B. W AND WT: ASTM A992 (Fy=50ksi, Fu=65ksi)
   C. RECTANGULAR AND SQUARE HSS: ASTM A500 GRADE C (Fy=50ksi, Fu=62ksi)
   D. ROUND HSS: ASTM A500 GRADE C (Fy=46ksi, Fu=62ksi)
   E. PIPES: ASTM A53, GRADE B (Fy=35ksi, Fu=60ksi)
   F. BOLTS AT STEEL-TO-STEEL CONNECTIONS: ASTM A325 ST (SNUG-TIGHTENED), TYPE 1; 7/8"ϕ TYP. U.O.N.
   G. BOLTS AT OTHER APPLICATIONS: ASTM A307
   H. ANCHOR RODS: ASTM F1554, GRADE 36, U.N.O.
   I. THREADED RODS: ASTM A36
   J. NUTS: ASTM A563
   K. WASHERS: ASTM F436
3. ALL WELDING STEEL SHALL CONFORM TO AWS D1.1 AND SHALL BE PERFORMED BY AWS CERTIFIED WELDERS USING E-70XX LOW HYDROGEN MOISTURE RESISTING ELECTRODES UNLESS OTHERWISE NOTED.
4. USE THE MINIMUM SIZE OF WELDS IN ACCORDANCE WITH AISC MANUAL OF STEEL CONSTRUCTION AT STEEL TO STEEL JOINTS UNLESS A LARGER WELDING SIZE IS SPECIFIED ON THE PLANS.
5. ALL STEEL (EXCEPT STAINLESS STEEL) TO BE PAINTED SHALL BE SHOP PRIMED WITH ZINC OXIDE PRIMER UNLESS OTHERWISE NOTED.
6. DIAMETER OF BOLT HOLE SHALL BE 1/16" LARGER THAN THE BOLT'S DIAMETER UNLESS OTHERWISE NOTED.
7. IF DRILLING HOLES AT STEEL MEMBERS TO ACCOMMODATE THE CONCRETE OR MASONRY ANCHORS IS REQUIRED, THE DRILLING MUST BE DONE AFTER THE ANCHORS HAVE BEEN INSTALLED. THE HOLES AT STEEL MEMBERS SHALL MATCH THE LOCATION OF INSTALLED ANCHORS.
8. PROVIDE BEVELED WASHERS ON SLOPING SURFACE OF CONNECTIONS FOR FULL BEARING.
9. WHERE LENGTH OF WELDING IS NOT SHOWN, IT SHALL BE FULL LENGTH OF JOINT. ALL BUTT WELDS SHALL BE COMPLETE PENETRATION WELDS UNLESS OTHERWISE NOTED.
10. WHERE SO INDICATED ON THE DRAWINGS, STEEL EXPOSED TO VIEW IS DEFINED AS "ARCHITECTURALLY EXPOSED STRUCTURAL STEEL" (AESS). SEE SPECIFICATIONS.
11. MINIMUM BOLT SPACING FROM CENTER OF STANDARD AISC HOLE AS FOLLOWS, U.N.O.:
    CENTER-TO-CENTER = 3 BOLT DIAMETER
    CENTER-TO-ROLLED EDGE = 1.5 BOLT DIAMETER
    CENTER-TO-SHEARED EDGE = 1.75 BOLT DIAMETER
12. THE NATURAL CAMBER IN BEAMS SHALL BE ORIENTED UP, UNLESS NOTED OTHERWISE. AT CANTILEVERS, THE NATURAL CAMBER SHALL BE ORIENTED SO THAT THE FREE END IS ABOVE THE CONNECTED END. THE TOP OF ALL MEMBERS SHALL BE CLEARLY IDENTIFIED. ALL BEAM CAMBERS SHOWN ON THE PLANS SHALL INCLUDE NATURAL CAMBER.
13. PROVIDE UPWARD CAMBER IN BEAMS SHALL BE ORIENTED UP, UNLESS NOTED OTHERWISE. AT CANTILEVERS, THE NATURAL CAMBER SHALL BE ORIENTED SO THAT THE FREE END IS ABOVE THE CONNECTED END. THE TOP OF ALL MEMBERS SHALL BE CLEARLY IDENTIFIED. ALL BEAM CAMBERS SHOWN ON THE PLANS SHALL INCLUDE NATURAL CAMBER.
14. GALVANIZE ALL STEEL EXPOSED TO WEATHER, UNLESS OTHERWISE NOTED.
15. ALL STEEL SHALL BE FABRICATED BY A QUALIFIED FABRICATOR THAT PARTICIPATES IN THE AISC QUALITY CERTIFICATION PROGRAM AND IS DESIGNATED AN AISC CERTIFIED PLANT, CATEGORY STD.

STRUCTURAL STEEL WELDING

1. ALL WELDING SHALL BE IN CONFORMANCE WITH THE AWS D1.1.
2. ALL WELDING MUST BE APPROVED BY AN AWS CERTIFIED INSPECTOR.
3. ALL WELDING OF STEEL SHALL CONFORM TO AWS D1.1 AND SHALL BE PERFORMED BY AWS CERTIFIED WELDERS USING E-70XX LOW HYDROGEN MOISTURE RESISTING ELECTRODES UNLESS OTHERWISE NOTED.
4. ALL WELDS USED IN MEMBERS AND CONNECTIONS IN THE SEISMIC LOAD RESISTING SYSTEM (SLRS) SHALL BE MADE WITH FILLER METALS MEETING THE REQUIREMENTS SPECIFIED IN AWS D1.8 CLAUSE 6.3. ALL WELDING ELECTRODES AND ELECTRODE-FLUX COMBINATIONS SHALL MEET DIFFUSIBLE HYDROGEN TESTING REQUIREMENTS OF TABLE 6.3 OF AWS D1.8. WELDS DESIGNATED AS DEMAND 'CRITICAL WELDS' SHALL BE MADE WITH FILLER METALS MEETING THE REQUIREMENTS SPECIFIED IN AWS D1.8 CLAUSES 6.3.5, 6.3.6, 6.3.7 AND 6.3.8.
5. ALL WELDS USED IN MEMBERS AND CONNECTIONS IN THE SLRS SHALL BE MADE WITH A FILLER METAL THAT CAN PRODUCE WELDS THAT HAVE A MINIMUM CHARPY V-NOTCH TOUGNESS OF 20 FT-LB AT 0 °F, AS DETERMINED BY THE APPROPRIATE AWS A5 CLASSIFICATION OR MANUFACTURER CERTIFICATION.
6. USE THE MINIMUM SIZE OF WELDING IN ACCORDANCE WITH AISC MANUAL OF STEEL CONSTRUCTION AT STEEL-TO-STEEL JOINTS UNLESS A LARGER WELDING SIZE IS SPECIFIED ON THE PLANS.
7. WHERE LENGTH OF WELDING IS NOT SHOWN, IT SHALL BE FULL LENGTH OF JOINT. ALL BUTT WELDS SHALL BE COMPLETE PENETRATION WELDS UNLESS OTHERWISE NOTED.
8. THE CONTRACTOR SHALL PROVIDE WELDING PROCEDURE SPECIFICATION (WPS) AND DETAILED SEQUENCE OF WELDING SKETCH FOR REVIEW PRIOR TO STARTING FABRICATION. THE SEQUENCE OF WELDING SHALL BE PLANNED TO MINIMIZE LOCKED IN STRESSES AND DISTORTION. EACH WPS SHALL BE STAMPED WITH AN AWS INSPECTOR'S STAMP INDICATING THAT INSPECTOR'S CERTIFICATION THAT THE WPS CONFORMS TO AWS D1.1, AND ALL REQUIREMENTS SET FORTH IN THE DRAWINGS AND SPECIFICATIONS. EACH WPS SHALL BE FORMATTED TO FIT ON LETTER SIZED PAPER BUT SHALL BE SUBMITTED ON THE UPPER PORTION OF LEGAL SIZED PAPER ALLOWING FOR AWS INSPECTOR, CONTRACTOR REVIEW, AND DESIGNER REVIEW STAMPS TO BE PLACED ON THE BLANK BOTTOM PORTION OF EACH LEGAL SIZED SHEET.
9. COMPLETE PENETRATION GROOVE WELDS SHALL HAVE A FILLER METAL WITH CHARPY V-NOTCH TOUGHNESS OF 20 FT-LBS AVERAGE AT 0 DEGREES FAHRENHEIT. FOR DEMAND CRITICAL WELDS OF THE SEISMIC LOAD RESISTING SYSTEM SUBJECTED TO SERVICE TEMPERATURES BELOW +50 °F, THE MINIMUM CHARPY V-NOTCH OF 40 FT-LBS SHALL BE PROVIDED AT A SERVICE TEMPERATURE NOT MORE THAN 20 °F ABOVE THE LOWEST ANTICIPATED SERVICE TEMPERATURE.
10. FACES OF FILLET WELDS NOT EXPOSED TO VIEW SHALL HAVE AS-WELDED SURFACES THAT ARE REASONABLY SMOOTH AND UNIFORM. NO FINISHING OR GRINDING SHALL BE REQUIRED EXCEPT WHERE CLEARANCES OR FIT OF OTHER ITEMS MAY SO NECESSITATE.
11. ALL COMPLETE AND PARTIAL PENETRATION WELDS WHICH ARE EXPOSED TO VIEW SHALL BE GROUND SMOOTH AND FLUSH WITH FINISH SURFACE OF STEEL. HOLES SHALL BE FILLED WITH WELD METAL AND SMOOTHED BY GRINDING OR FILING.
12. FINISH GROOVE PREPARATION THERMAL CUTS BY GRINDING.
13. WELDS SHALL BE TERMINATED AT THE END OF A JOINT IN A MANNER THAT WILL ENSURE SOUND WELDS. THIS SHALL BE DONE BY USE OF EXTENSION BARS AND RUN OFF TABS IF NECESSARY.
14. TO ASSURE THE PROPER AMPERAGE AND VOLTAGE OF THE WELDING PROCESS, A HAND HELD CALIBRATED AMP AND VOLT METER SHALL BE USED. AMPERAGE AND VOLTAGE SHALL BE MEASURED AT THE ARC WITH THIS EQUIPMENT. TRAVEL SPEED AND ELECTRODE STICK OUT SHALL BE VERIFIED TO BE IN COMPLIANCE WITH THE ELECTRODE MANUFACTURER'S RECOMMENDATIONS AND WITH THE APPROVED WELDING PROCEDURE SPECIFICATION.

STEEL DECK

1. STEEL DECK SHALL BE MANUFACTURED BY VERCO MANUFACTURING CO. (VERCO IAPMO ER-2018) OR APPROVED EQUAL.
2. STEEL DECK SHALL BE FORMED FROM STEEL PER ASTM A653 OR A1063 GRADE 50 (MIN.).
3. STEEL DECK SHALL BE GALVANIZED WITH A MINIMUM G30 COATING, UNLESS OTHERWISE NOTED.
4. FORM STEEL DECK UNITS IN LENGTHS TO SPAN 3 OR MORE SUPPORTS, WITH BUTTED OR NESTED 2" END LAPS, AND MINIMUM 2" END BEARING ON SUPPORTING MEMBERS UNLESS OTHERWISE NOTED.
5. STEEL DECK SHALL BE SECURED TO SUPPORTING MEMBERS WITH 1/2" EFFECTIVE DIAMETER PUDDLE WELDS UNLESS OTHERWISE NOTED.
6. ALL WELDING SHALL CONFORM TO AWS AND SHALL BE ERFORMED BY CERTIFIED WELDERS USING E-70XX ELECTRODES.
7. ALL WELDS OF STEEL DECK SHALL BE TOUCHED UP WITH ZINC-RICH PAINT.

STRUCTURAL TESTS AND INSPECTIONS

1. STRUCTURAL TESTS AND INSPECTION SHALL BE ACCORDING TO 2022 CALIFORNIA BUILDING CODE AND PROJECT SPECIFICATION.
2. SPECIAL INSPECTION BY A REGISTERED DEPUTY INSPECTOR IS REQUIRED.
3. CONSTANT PRESENCE AND INSPECTION BY THE PROJECT OR SPECIAL INSPECTOR ARE REQUIRED FOR THE FOLLOWING TYPES OF WORK WHERE OCCURS:
   A. CONCRETE PLACEMENT
   B. REINFORCING STEEL PRIOR TO CONCRETE PLACEMENT
   C. HOLDOWN INSTALLATION
   D. WOOD SHEARWALLS, SHEATHING AND NAILING
   E. FLOOR AND ROOF DIAPHRAGM NAILING
   F. BOLTS INSTALLED IN CONCRETE AND MASONRY
   G. STRUCTURAL STEEL WELDING
   H. CONCRETE MASONRY UNITS, LEVEL B QUALITY ASSURANCE PER ACI 530-13 SECTION 3.1.2.
   I. POST-INSTALLED ANCHORS
   J. HIGH STRENGTH BOLTING
4. TESTING FOR POST-INSTALLED ANCHORS SHALL BE PER 1909 OF THE 2022 CALIFORNIA BUILDING CODE (CBC).

APPROVAL

CITY APPROVED BY:
DIRECTOR OF PUBLIC WORKS DATE
CITY REVIEWED BY:
SENIOR ENGINEER DATE
SUBMITTED BY:
DATE

CLIENT
LANCASTER
Creating a better tomorrow. Together.
CITY OF LANCASTER
44933 FERN AVENUE
LANCASTER, CA 93534

PROJECT NAME
EL DORADO PARK RENOVATION
PWCP NO. 24-008
44501 5TH ST EAST
LANCASTER, CA 93535

ENGINEER/ARCHITECT
IDS
IDS GROUP
1 PETERS CANYON ROAD, SUITE 130
IRVINE, CA 92606
TEL: 949-387-8500, FAX: 949-387-0800

STAMP
REGISTERED PROFESSIONAL ENGINEER
SAID L. HILMY
No. 3680
STRUCTURAL
STATE OF CALIFORNIA

ISSUE

REV.	DESCRIPTION	DATE
	30% CD SET	12/15/23
	60% CD SET	01/12/24
	90% CD SET	02/02/24
1	CLIENT REVISIONS	04/26/24
	COMPOSITE SET	9/24/25

PROJECT IDENTIFICATION
THIS DRAWING WAS CREATED IN REVIT V. 2020 UNLESS OTHERWISE NOTED.
THE ORIGINAL SIZE OF THIS SHEET IS 30" X 42"

THESE DRAWINGS AND SPECIFICATIONS ARE THE PROPERTY AND COPYRIGHT OF IDS GROUP AND SHALL NOT BE USED ON ANY OTHER PROJECT OR LOCATIONS EXCEPT AS DESCRIBED ON THE DRAWINGS, WITHOUT THE WRITTEN AGREEMENT WITH IDS GROUP.

IDS PROJECT NO.	22X099.03
IDS DRAWN BY	YY
IDS CHECKED BY	CK/VM
IDS APPROVED BY	

SHEET TITLE
GENERAL NOTES

SHEET NUMBER
S-002

CBC 2022 TMS 602: TABLE 3 SPECIAL INSPECTION OF MASONRY

MINIMUM VERIFICATION	REQUIRED FOR QUALITY ASSURANCE (a)			REFERENCE FOR CRITERIA
	LEVEL 1	LEVEL 2	LEVEL 3	TMS 602
PRIOR TO CONSTRUCTION, VERIFICATION OF COMPLIANCE OF SUBMITTALS.	R	R	R	ART. 1.5
PRIOR TO CONSTRUCTION, VERIFICATION OF f'm AND f'aac, EXCEPT WHERE SPECIFICALLY EXEMPTED BY THE CODE.	NR	R	R	ART. 1.4 B
DURING CONSTRUCTION, VERIFICATION OF SLUMP FLOW AND VISUAL STABILITY INDEX (VSI) WHEN SELF-CONSOLIDATING GROUT IS DELIVERED TO THE PROJECT SITE	NR	R	R	ART. 1.5 & 1.6.3
PRIOR TO CONSTRUCTION, VERIFICATION OF f'm AND f'aac FOR EVERY 5,000 SQ.FT. (465 SQ. m)	NR	NR	R	ART. 1.4 B
DURING CONSTRUCTION, VERIFICATION OF PROPORTIONS OF MATERIALS AS DELIVERED TO THE PROJECT SITE FOR PREMIXED OR PREBLENDED MORTAR, PRESTRESSING GROUT, AND GROUT OTHER THAN SELF-CONSOLIDATING GROUT.	NR	NR	R	ART. 1.4 B

CBC 2022 TMS 602: TABLE 4 SPECIAL INSPECTION OF MASONRY

INSPECTION TASK	FREQUENCY (a)			REFERENCE FOR CRITERIA	
	LEVEL 1	LEVEL 2	LEVEL 3	TMS 402	TMS 602
1. AS MASONRY CONSTRUCTION BEGINS, VERIFY THAT THE FOLLOWING ARE IN COMPLIANCE:					
a. PROPORTIONS OF SITE-PREPARED MOTAR	NR	P	P		ART. 2.1, 2.6 A, & 2.6 C
b. GRADE AND SIZE OF PRESTRESSING TENDONS AND ANCHORAGES	NR	P	P		ART. 2.4 B & 2.4 H
c. GRADE, TYHPE AND SIZE OF REINFORCEMENT, CONNECTORS, ANCHOR BOTLS, AND PRESTRESSING TENDONS AND ANCHORAGES	NR	P	P		ART. 3.4 & 3.6 A
d. PRESTRESSING TECHNIQUE	NR	P	P		ART. 3.6 B
e. PROPERTIES OF THIN-BED MORTAR FOR AAC MASONRY	NR	C (b) / P (c)	C		ART. 2.1 C.1
f. SAMPLE PANEL CONSTRUCTION	NR	P	C		ART. 1.6 D
2. PRIOR TO GROUTING, VERIFY THAT THE FOLLOWING ARE IN COMPLIANCE:					
a. GROUT SPACE	NR	P	C		ART. 3.2 D & 3.2 F
b. PLACEMENT OF PRESTRESSING TENDONS AND ANCHORAGES	NR	P	P	SEC. 10.8 & 10.9	ART. 2.4 & 3.6
c. PLACEMENT OF REINFORCEMENT, CONNECTORS, AND ANCHOR BOLTS	NR	P	C	SEC. 6.1, 6.3.1, 6.3.6, & 6.3.7	ART.3.2 E & 3.4
d. PROPORTIONS OF SITE-PREPARED GROUT AND PRESTRESSING GROUT FOR BONDED TENDONS	NR	P	P		ART. 2.6 B & 2.4 G. t. b
3. VERIFY COMPLIANCE OF THE FOLLOWING DURING CONSTRUCTION:					
a. MATERIALS AND PROCEDURES WITH THE APPROVED SUBMITTALS	NR	P	P		ART. 1.5
b. PLACEMENT OF MASONRY UNITS AND MORTAR JOINT CONSTRUCTION	NR	P	P		ART. 3.3 B
c. SIZE AND LOCATION OF STRUCTURAL MEMEBERS	NR	P	P		ART. 3.3 F
d. TYPE, SIZE, AND LOCATION OF ANCHORS, INCLUDING OTHER DETAILS OF ANCHORAGE OF MASONRY TO STRUCTURAL MEMBERS, FRAMES, OR OTHER CONSTRUCTION	NR	P	C	SEC. 1.2.1 (e), 6.2.1, & 6.3.1	
e. WELDING OF REINFORCEMENT	NR	C	C	SEC.6.1.6.1.2	
f. PREPARATION, CONSTRUCTION, AND PROTECTION OF MASONRY DURING COLD WEATHER (TEMPERATURE BELOW 40°F (4.4°C)) OR HOT WEATHER (TEMPERATURE ABOVE 90°F (32.2°C))	NR	P	P		ART. 1.8 C & 1.8 D
g. APPLICATION AND MEASUREMENT OF PRESTRESSING FORCE	NR	C	C		ART. 3.6 B
h. PLACEMENT OF GROUT AND PRESTRESSING GROUT FOR BONDED TENDONS IS IN COMPLIANCE	NR	C	C		ART. 3.5 & 3.6 C
i. PLACEMENT OF AAC MASONRY UNITS AND CONSTRUCTION OF THIN-BED MORTAR JOINTS	NR	C (b) / P (c)	C		ART. 3.3 B.9 & 3.3 F.1.b
4. OBSERVE PREPARATION OF GROUT SPECIMENS, MORTAR SPECIMENS, AND/OR PRISMS	NR	P	C		ART. 1.4 B.2.a.3, 1.4 B.2.b.3, 1.4 B.2.c.3, 1.4 B.3, & 1.4 B.4

(a) FREQUENCY REFERS TO THE FREQUENCY OF INSPECTION, WHICH MAY BE CONTINUOUS DURING THE LISTED OR PERIODICALLY DURING THE LISTED TASK, AS DEFINED IN THE TABLE.
(b) REQUIRED FOR THE FIRST 5000 SQUARE FEET (465 SQUARE METERS) OF AAC MASONRY.
(c) REQUIRED AFTER THE FIRST 5000 SQUARE FEET (465 SQUARE METERS) OF AAC MASONRY.

CBC 2022 TABLE 1705.3: REQUIRED SPECIAL INSPECTION AND TESTS OF CONCRETE CONSTRUCTION

TYPE	CONTINUOUS SPECIAL INSPECTION	PERIODIC SPECIAL INSPECTION	REFERENCE STANDARD a	IBC REFERENCE
1. INSPECT REINFORCEMENT INCLUDING PRESTRESSING TENDONS, AND VERIFY PLACEMENT.	-	X	ACI 318 Ch. 20, 25.2, 25.3, 26.6.1-26.6.3	1908.4
2. REINFORCING BAR WELDING: a. VERIFY WELDABILITY OF REINFORCING BARS OTHER THAN ASTM A706. b. INSPECT SINGLE-PASS FILLET WELDS, MAXIMUM 5/16"; AND c. INSPECT ALL OTHER WELDS.	- X	X X	AWS D1.4, ACI 318: 26.6.4	-
3. INSPECT ANCHORS CAST IN CONCRETE.	-	X	ACI 318: 17.8.2	-
4. INSPECT ANCHORS POST-INSTALLED IN HARDENED CONCRETE MEMBERS. a. ADHESIVE ANCHORS INSTALLED IN HORIZONTAL OR UPWARDLY INCLINED ORIENTATIONS TO RESIST SUSTAINED TENSION LOADS. b. MECHANICAL ANCHORS AND ADHESIVE NOT DEFINED IN 4.a.	X	 X	 ACI 318: 17.8.2.4 ACI 318: 17.8.2	-
5. VERIFY USE OF REQUIRED DESIGN MIX.	-	X	ACI 318: Ch. 19, 26.4.3., 26.4.4	1904.1, 1904.2, 1908.2, 1908.3
6. PRIOR TO CONCRETE PLACEMENT,FABRICATE SPECIMENS FOR STRENGTH TESTS, PERFORM SLUMP AND AIR CONTENT TESTS, AND DETERMINE THE TEMPERATURE OF THE CONCRETE.	X	-	ASTM C172, ASTM C 31 ACI 318: 26.5, 26.12	1908.10
7. INSPECT CONCRETE FOR PROPER APPLICATION TECHNIQUES.	X	-	ACI 318: 26. 5	1908.6, 1908.7, 1908.8
8. VERIFY MAINTENANCE OF SPECIFIED CURING TEMPERATURE AND TECHNIQUES.	-	X	ACI 318: 26.5.3-26.5.5	1908.9
9. INSPECT PRESTRESSED CONCRETE FOR: a. APPLICATION OF PRESTRESSING FORCES, AND b. GROUTING OF BONDED PRESTRESSING TENDONDS.	 X X	 - -	ACI 318: 26.10	-
10. INSPECT ERECTION OF PRECAST CONCRETE MEMBERS.	-	X	ACI 318: Ch. 26.9	-
11. VERIFY IN-SITU CONCRETE STRENGTH, PRIOR TO STRESSING TENDONS IN POST-TENSIONED CONCRETE AND PRIOR TO REMOVAL OF SHORES AND FORMS FROM BEAMS AND STRUCTURAL SLABS.	-	X	ACI 318: 26.11.2	
12. INSPECT FORMWORK FOR SHAPE, LOCATION AND DIMENSIONS OF THE CONCRETE MEMBER BEING FORMED.	-	X	ACI 318: 26.11.1.2 (b)	

a. WHERE APPLICABLE, SEE ALSO CBC SECTION 1705.12, SPECIAL INSPECTIONS FOR SEISMIC RESISTANCE.
b. SPECIFIC REQUIREMENTS FOR SPECIAL INSPECTION SHALL BE INCLUDED IN THE RESEARCH REPORT FOR THE ANCHOR ISSUED BY AN APPROVED SOURCE IN ACCORDANCE WITH 17.8.2. IN ACI318 OR OTHER QUALIFICATIONS PROCEDURES. WHERE SPECIFIC REQUIREMENTS ARE NOT PROVIDED, SPECIAL INSPECTION REQUIREMENTS SHALL BE SPECIFIED BY THE REGISTERED DESIGN PROFESSIONAL AND SHALL BE APPROVED BY THE BUILDING OFFICIAL PRIOR TO THE COMMENCEMENT OF THE WORK.
c. INSTALLATION OF ALL ADHESIVE ANCHORS IN HORIZONTAL AND UPWARDLY INCLINED POSITION SHALL BE PERFORMED BY AN ACI/CRSI CERTIFIED ADHESIVE ANCHOR INSTALLER, EXCEPT WHERE THE FACTORED DESIGN TENSION ON THE ANCHORS IS LESS THAN 100 POUNDS AND THOSE ANCHORS ARE CLEARLY NOTED ON THE APPROVED CONSTRUCTION DOCUMENTS OR WHERE THE ANCHORS ARE SHEAR DOWELS ACROSS COLD JOINTS IN SLAB ON GRADE WHERE THE SLAB IS NOT A PART OF THE LATERAL FORCE-RESISTING SYSTEM.

CBC 2022 TABLE 1705.6: REQUIRED SPECIAL INSPECTION AND TESTS OF SOILS

VERIFICATION AND INSPECTION TASK	CONTINUOUS SPECIAL INSPECTION	PERIODICALLY SPECIAL INSPECTION
1. VERIFY MATERIAL BELOW SHALLOW FOUNDATIONS ARE ADEQUATE TO ACHIEVE THE DESIGN BEARING CAPACITY.	-	X
2. VERIFY EXCAVATIONS ARE EXTENDED TO PROPER DEPTH AND HAVE REACHED PROPER MATERIAL.	-	X
3. PERFORM CLASSIFICATION AND TESTING OF COMPACTED FILL MATERIALS.	-	X
4. VERIFY USE OF PROPER MATERIALS, DENSITIES AND LIFT THICKNESSES DURING PLACEMENT AND COMPACTION OF COMPACTED FILL.	X	-
5. PRIOR TO PLACEMENT OF COMPACTED FILL, OBSERVE SUBGRADE AND VERIFY THAT SITE HAS BEEN PREPARED PROPERLY.	-	X

APPROVAL

CITY APPROVED BY:
DIRECTOR OF PUBLIC WORKS DATE
CITY REVIEWED BY:
SENIOR ENGINEER DATE
SUBMITTED BY:
DATE

CLIENT
LANCASTER
Creating a better tomorrow. Together.
CITY OF LANCASTER
44933 FERN AVENUE
LANCASTER, CA 93534

PROJECT NAME
EL DORADO PARK RENOVATION
PWCP NO. 24-008
44501 5TH ST EAST
LANCASTER, CA 93535

ENGINEER/ARCHITECT
IDS
IDS GROUP
1 PETERS CANYON ROAD, SUITE 130
IRVINE, CA. 92606
TEL: 949-387-8500, FAX: 949-387-0800

STAMP
REGISTERED PROFESSIONAL ENGINEER
CHAD L. HILL
No. 3680
STRUCTURAL
STATE OF CALIFORNIA

ISSUE

REV.	DESCRIPTION	DATE
	30% CD SET	12/15/23
	60% CD SET	01/12/24
	90% CD SET	02/02/24
1	CLIENT REVISIONS	04/26/24
	COMPOSITE SET	9/24/25

PROJECT IDENTIFICATION

THIS DRAWING WAS CREATED IN REVIT V. 2020 UNLESS OTHERWISE NOTED.

THE ORIGINAL SIZE OF THIS SHEET IS 30" X 42"

THESE DRAWINGS AND SPECIFICATIONS ARE THE PROPERTY AND COPYRIGHT OF IDS GROUP AND SHALL NOT BE USED ON ANY OTHER PROJECT OR LOCATIONS EXCEPT AS DESCRIBED ON THE DRAWINGS, WITHOUT THE WRITTEN AGREEMENT WITH IDS GROUP

IDS PROJECT NO.	22X099.03
IDS DRAWN BY	YY
IDS CHECKED BY	CK/VM
IDS APPROVED BY	

SHEET TITLE
GENERAL NOTES

SHEET NUMBER
S-003

IDS GROUP - FILE LOCATION: \\IDS-FS1\Shared\PROJECTS\2022\Shared\22X099.01 LANC - El Dorado Park\04 BIM\03 Struc\22X099.01_ Lanc El Dorado Park_Pump House_Shed_R21.rvt PLOT DATE: 4/26/2024 5:28:47 PM USER: CN

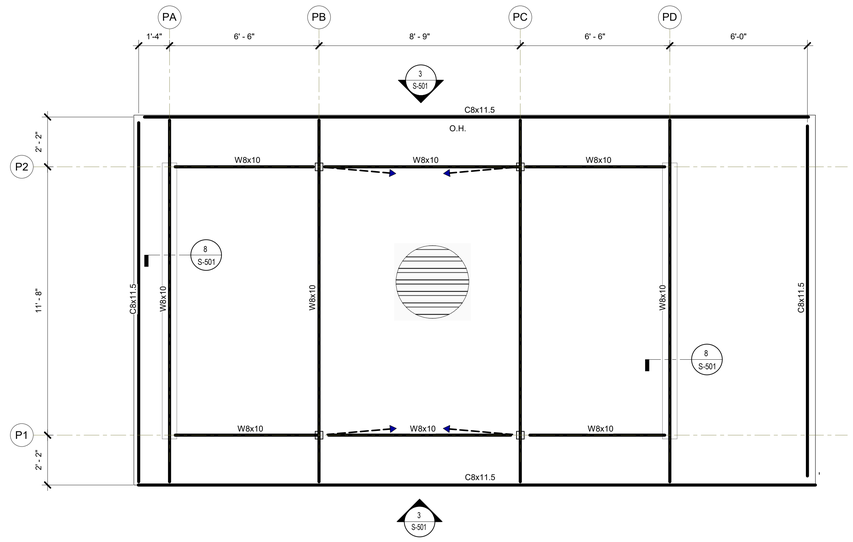

PUMP HOUSE ROOF PLAN | 3/8" = 1'-0" | 2

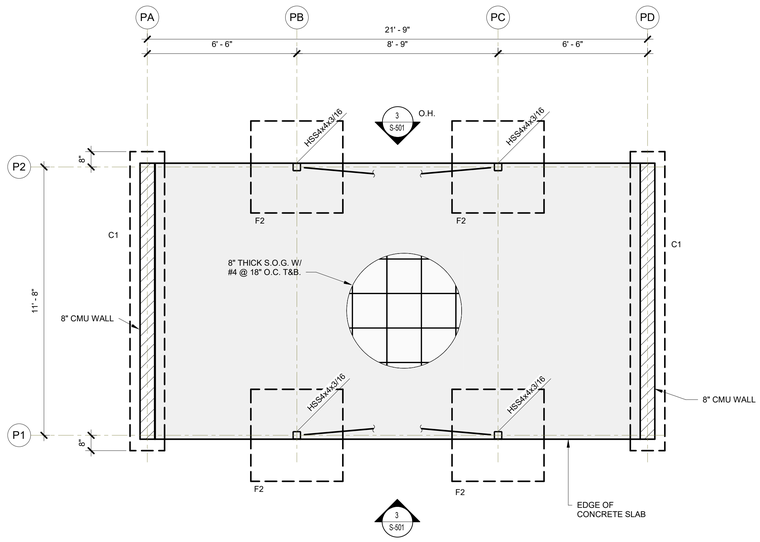

PUMP HOUSE FOUNDATION PLAN | 3/8" = 1'-0" | 1

FRAMING NOTES

1. SEE SHEET S-001 THROUGH S-003 FOR GENERAL NOTES.
2. SEE FOUNDATION PLAN FOR POSTS, SHEAR WALLS AND HOLDOWNS.
3. CONTRACTOR SHALL VERIFY ALL FRAMING DIMENSIONS AGAINST ARCHITECTURAL DRAWINGS AND NOTIFY THE ARCHITECT AND PROJECT ENGINEER OF ANY DISCREPANCIES BEFORE STARTING THE WORK.
4. ALL SHEAR CONNECTORS AND BLOCKING MUST BE INSTALLED PRIOR TO THE INSTALLATION OF FLOOR AND ROOF SHEATHINGS.
5. ALL MULTIPLE STUDS OR POSTS SHALL BE CARRIED FROM FLOOR ABOVE DOWN TO FLOOR OR BEAM BELOW UNLESS NOTED OTHERWISE. PROVIDE BLOCKING AT FLOOR LEVEL TO TRANSFER LOAD FROM UPPER POST TO LOWER POST.
6. PROVIDE DOUBLE FLOOR JOISTS UNDER ALL PARALLEL WALLS THAT ARE OVER 5'-0" IN LENGTH. WHERE WALL LANDS BETWEEN JOISTS, LAYOUT ONE ADDITIONAL JOIST BELOW WALL.
7. WHERE DOUBLE FLOOR JOISTS ARE REQUIRED UNDER PARALLEL PLUMBING WALLS, PROVIDE DOUBLE FLOOR JOIST SEPARATION FOR PLUMBING.
8. UTILITY LINE PENETRATION ARE NOT ALLOWED IN TOP PLATES, SILL/SOLE PLATES, BLOCKINGS ABOVE AND BELOW SHEAR WALLS.
9. TOP PLATE OF SHEAR WALLS SHALL BE CONTINUOUS, SEE SHEET S-504.
10. SEE DETAIL 1 / S-504 FOR TYPICAL SHEAR WALL FRAMING. SEE 3 / S-504 FOR SHEAR WALLS WITH OPENING.
11. SEE DETAIL 4 / S-504 FOR TYPICAL BEARING WALL FRAMING.
12. SEE DETAIL 13 / S-505 FOR TYPICAL DIAPHRAGM SHEATHINGS.

FRAMING LEGEND

- INDICATES 8" THICK CMU WALL BELOW
- INDICATES STEEL COLUMN
- INDICATES MOMENT CONNECTOIN PER DETAIL -/-
- 22 GA. HSB-36-SS ROOF DECK W/ 1/4"Ø SMS AT 36/4 PATTERN CONNECTION
- INDICATES VERTICAL BRACE DOWN TO LEVEL BELOW

FOUNDATION NOTES

1. SEE SHEET S-001 THROUGH S-003 FOR GENERAL NOTES.
2. VERIFY ALL DIMENSIONS WITH ARCHITECTURAL DRAWINGS.
3. REFER TO ARCHITECTURAL DRAWINGS FOR EDGE OF CONCRETE SLAB-ON-GRADE, TOP OF SLAB ELEVATIONS, CONTROL JOINTS, AND RECESS IN SLAB.
4. SEE ARCHITECTURAL DRAWINGS FOR FINISHED FLOOR ELEVATIONS.
5. SEE SHEET S-500 FOR TYPICAL CONCRETE SLAB-ON-GRADE DETAILS.
6. FOR TYPICAL SHEAR WALL ELEVATIONS AND DETAILS SEE SHEET S-504.
7. HOLDOWN ANCHORS SHALL BE RE-TIGHTENED JUST PRIOR TO COVERING THE WALL FRAMING. SEE DETAILS 5/ S-503, AND 6/ S-503 FOR TYPICAL HOLDOWN DETAILS.
8. ALL HOLDOWN ANCHORS SHALL BE TIED IN PLACE PRIOR TO CALLING FOUNDATION INSPECTION.
9. REFER TO GEOTECHNICAL REPORT FOR RECOMMENDATIONS OF MOISTURE BARRIER.
10. REFER TO ARCH DRAWINGS, FOR CONCRETE CURB LOCATION AND DIMENSIONS.

FOUNDATION LEGEND

- Cx — INDICATES TYPE OF CONT. FOOTING, SEE SCHEDULE
- Fx — INDICATES TYPE OF SPREAD FOOTING, SEE SCHEDULE
- INDICATES CONTINUOUS FOOTING, SEE SCHEDULE ON S-200
- INDICATES SPREAD FOOTING, SEE SCHEDULE ON S-200
- INDICATES STEEL COLUMN
- INDICATES 8" THICK CMU WALL
- INDICATES CONCRETE SLAB-ON-GRADE
- INDICATES VERTICAL BRACE UP TO LEVEL ABOVE

APPROVAL

CITY APPROVED BY:

DIRECTOR OF PUBLIC WORKS — DATE

CITY REVIEWED BY:

SENIOR ENGINEER — DATE

SUBMITTED BY:

DATE

CLIENT

LANCASTER

Creating a better tomorrow. Together.

CITY OF LANCASTER

44933 FERN AVENUE
LANCASTER, CA 93534

PROJECT NAME

EL DORADO PARK RENOVATION

PWCP NO. 24-008

44501 5TH ST EAST
LANCASTER, CA 93535

ENGINEER/ARCHITECT

IDS

IDS GROUP

1 PETERS CANYON ROAD, SUITE 130
IRVINE, CA. 92606
TEL: 949-387-8500, FAX: 949-387-0800

STAMP

REGISTERED PROFESSIONAL ENGINEER — CHAD L. HILTON — No. 3680 — STRUCTURAL — STATE OF CALIFORNIA

ISSUE

REV.	DESCRIPTION	DATE
	30% CD SET	12/15/23
	60% CD SET	01/12/24
	90% CD SET	02/02/24
1	CLIENT REVISIONS	04/26/24
	COMPOSITE SET	9/24/25

PROJECT IDENTIFICATION

THIS DRAWING WAS CREATED IN REVIT V. 2020 UNLESS OTHERWISE NOTED.

THE ORIGINAL SIZE OF THIS SHEET IS 30" X 42"

THESE DRAWINGS AND SPECIFICATIONS ARE THE PROPERTY AND COPYRIGHT OF IDS GROUP AND SHALL NOT BE USED ON ANY OTHER PROJECT OR LOCATIONS EXCEPT AS DESCRIBED ON THE DRAWINGS, WITHOUT THE WRITTEN AGREEMENT WITH IDS GROUP.

IDS PROJECT NO.	22X099.03
IDS DRAWN BY	YY
IDS CHECKED BY	CK/VM
IDS APPROVED BY	

SHEET TITLE

PUMP HOUSE FOUNDATION PLAN AND ROOF PLAN

SHEET NUMBER

S-200

IDS GROUP - FILE LOCATION: \\IDS-FS1\Shared\PROJECTS\2022\Shared\22X099.01 LANC - El Dorado Park\04 BIM\03 Struc\22X099.01_ Lanc El Dorado Park_Pump House_Struct_R17.rvt
PLOT DATE: 4/26/2024 5:28:47 PM
USER: CN

TENSION DEVELOPMENT (Ldh) LENGTHS OF STANDARD HOOKS

STANDARD HOOK DEVELOPMENT LENGTH "Ldh"				
				NORMAL WEIGHT
BAR SIZE	"D"	"G" 90° HOOK	"J" 180° HOOK	4000 psi
#3	2¼"	6"	3"	0'-8"
#4	3"	8"	4"	0'-10"
#5	3¾"	10"	5"	1'-0"
#6	4½"	12"	6"	1'-3"
#7	5¼"	1'-2"	7"	1'-5"
#8	6"	1'-4"	8"	1'-7"
#9	9½"	1'-7½"	11¾"	1'-10"
#10	10¾"	1'-10"	1'-1¼"	2'-1"

STANDARD HOOK NOTES:
1. ALL HOOK BARS SHALL EXTEND AS FAR AS POSSIBLE WITH A MINIMUM 2" END COVER AND WITH EMBEDMENT NOT LESS THAN SHOWN ON THE SCHEDULE U.N.O. ON PLANS.
2. SEE GENERAL NOTES MINIMUM SIDE COVER.

LEGEND:
d = BAR DIAMETER
D = 6d FOR #3 THROUGH #8
D = 8d FOR #9 THROUGH #11

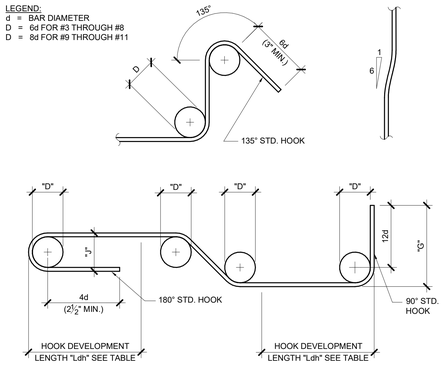

TYPICAL BENDS AT REINFORCEMENT | 1" = 1'-0" | 8

NOTES:
1. THE SCHEDULED LAP SPLICE LENGTHS ARE FOR EITHER OF THE FOLLOWING CASES:
A. CLEAR SPACING OF BARS BEING DEVELOPED OR SPLICED NOT LESS THAN (2db), AND CLEAR COVER NOT LESS THAN (db).
B. CLEAR SPACING OF BARS BEING DEVELOPED OR SPLICED SHALL NOT BE LESS THAN (db), CLEAR COVER NOT LESS THAN (db), AND STIRRUPS/TIES THROUGHOUT LAP SPLICE NOT MORE THAN 6" ON CENTER.
2. MULTIPLY LAP SPLICE LENGTHS BY 1.5 FOR CASES NOT MEETING THE CONDITIONS AS DESCRIBED IN NOTE 1.
3. USE CLASS "B" SPLICES FOR VERTICAL & HORIZONTAL BARS TYPICAL U.N.O..
4. TOP BARS ARE HORIZONTAL BARS PLACED SO THAT 12-INCHES OR MORE OF CONCRETE IS CAST IN THE MEMBER BELOW THE BAR.
5. VALUES SHOWN ARE FOR NORMAL WEIGHT CONCRETE. IF LIGHTWEIGHT CONCRETE, MULTIPLY LAP SPLICE LENGTHS BY 1.3. (REFER TO NOTE 2 FOR ANY ADDITIONAL INCREASES IN LAP SPLICE LENGTHS).
6. VALUES SHOWN ARE FOR UNCOATED GRADE 60 REINFORCEMENT.
7. ALL LAP SPLICE LENGTHS AT EACH LOCATION SHALL BE DEFINED BY THE SHOP DRAWINGS. THE CONTRACTOR IS RESPONSIBLE FOR COMPLIANCE WITH ALL COVER & SPACING REQUIREMENTS FOR LAP SPLICES LISTED BY THE SHOP DRAWINGS. FIELD CORRECTIONS SHALL BE MADE AT NO COST TO THE OWNER.
8. WHEN LAPPING A SMALLER BAR WITH A LARGE DIAMETER BAR USE THE LAP LENGTH FOR THE SMALL DIAMETER BAR.

STRENGTH	f'c = 4,000 PSI fy = 60,000 PSI			
CLASS OF LAP SPLICE	CLASS "A"		CLASS "B"	
BAR SIZE	BASIC	TOP BAR	BASIC	TOP BAR
#3	15"	20"	20"	26"
#4	19"	25"	25"	33"
#5	24"	31"	31"	41"
#6	29"	38"	38"	50"
#7	42"	55"	55"	71"
#8	48"	62"	62"	81"
#9	54"	70"	70"	91"
#10	61"	79"	79"	103"
#11	68"	88"	88"	115"

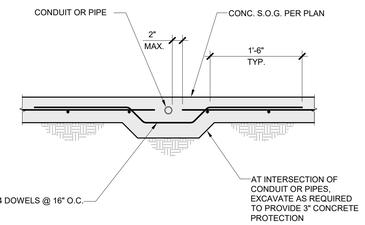

TYP. OPENING AT CONC. S.O.G. | 1" = 1'-0" | 19

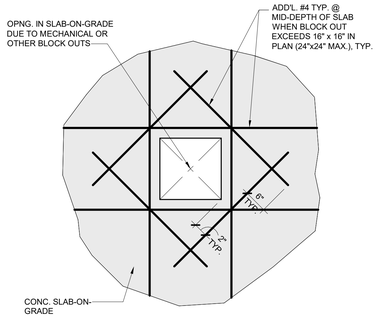

TYP. OPENING AT CONC. S.O.G. | 1" = 1'-0" | 15

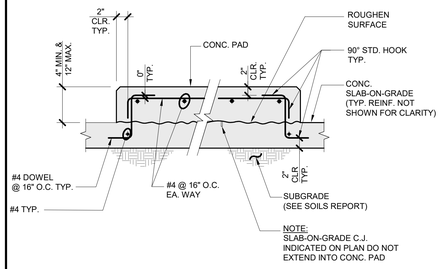

NOTE:
SLAB-ON-GRADE C.J. INDICATED ON PLAN DO NOT EXTEND INTO CONC. PAD

TYP. CONC. PAD AT SLAB-ON-GRADE | 1" = 1'-0" | 11

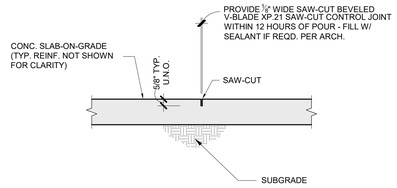

NOTES:
1. CONTROL JOINT SHALL BE A MAX. OF 16'-0" O.C. APART EACH WAY UNLESS OTHERWISE NOTED OR APPROVED BY THE ENGINEER.
2. SEE ARCH. DRAWINGS FOR ANY ADDITIONAL REQUIREMENTS.

TYP. CONTROL JOINT AT SLAB-ON-GRADE | 1" = 1'-0" | 7

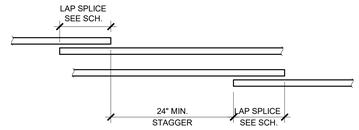

DIAGRAM AT STAGGERED SPLICES

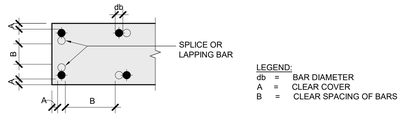

LEGEND:
db = BAR DIAMETER
A = CLEAR COVER
B = CLEAR SPACING OF BARS

BAR SPACING DIAGRAM

TYP. REINFORCING LAP SPLICE AT CONC. | 1" = 1'-0" | 3

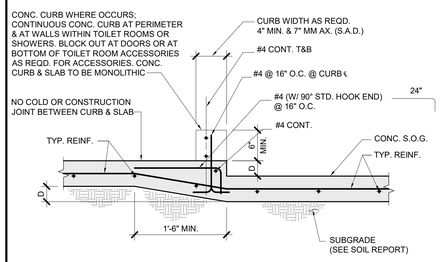

TYPICAL EQUIPMENT PAD DETAIL | 1" = 1'-0" | 14

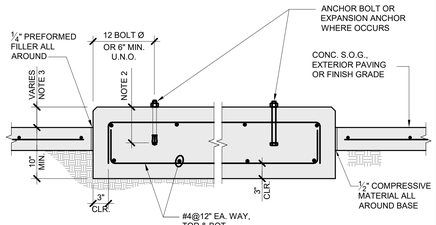

NOTES:
SEE MECHANICAL AND ELECTRICAL DRAWINGS SPECIFICATIONS.
CONTRACTOR TO DESIGN AND PROVIDE:
1. LOCATION AND DIMENSION OF BASES.
2. LOCATION, NUMBER, SIZES,TYPE OF BOLTS AND EMBEDMENT.
3. CURB HEIGHT, 3" MIN. WHERE NEEDED

TYPICAL EQUIPMENT PAD DETAIL | 1" = 1'-0" | 10

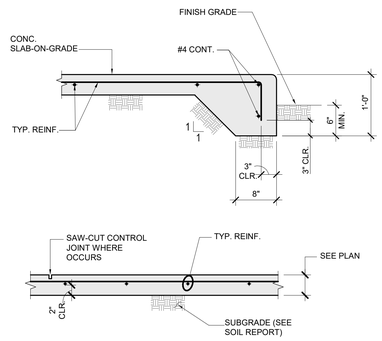

TYP. CONCRETE SLAB-ON-GRADE | 1" = 1'-0" | 6

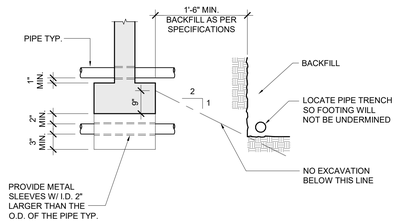

NOTE:
1. MAXIMUM PIPE DIAMETER SHALL BE 6" AND SPACED MINIMUM 18" APART.

TYPICAL PIPE AND TRENCH AT FOOTING | 1" = 1'-0" | 2

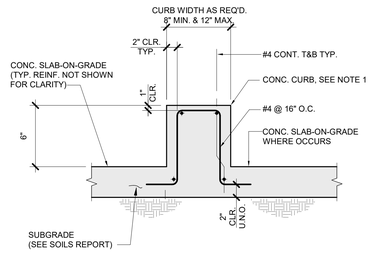

CASE B

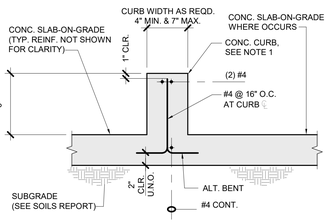

CASE A

NOTES:
1. SEE ARCHITECTURAL DRAWINGS FOR CURB SIZE AND LOCATION.
2. CURB HEIGHT SHALL BE AT LEAST 6" ABOVE FINISHED GRADE WHERE OCCURS.
3. ALL CURBS SHALL BE POURED MONOLITHICALLY WITH SLAB.

TYP. CONC. CURB AT S.O.G. | 1" = 1'-0" | 13

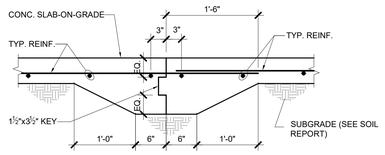

(FOR SINGLE LAYER REINF.)

NOTE:
1. CONSTRUCTION JOINT MAY BE USED INSTEAD OF CONTROL JOINT IF APPROVED BY THE ENGINEER.
2. CONSTRUCTION JOINTS MUST BE USED AT THE END OF THE DAY'S WORK AND AT A MAXIMUM SPACING OF 120 FT.

TYP. CONCSTRUCTION JOINT AT S.O.G. | 1" = 1'-0" | 9

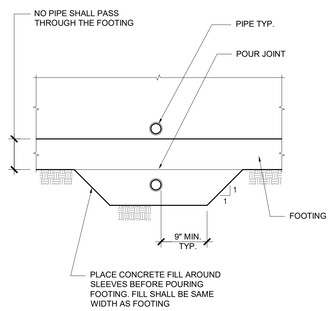

TYPICAL PIPE AND TRENCH AT FOOTING | 1" = 1'-0" | 5

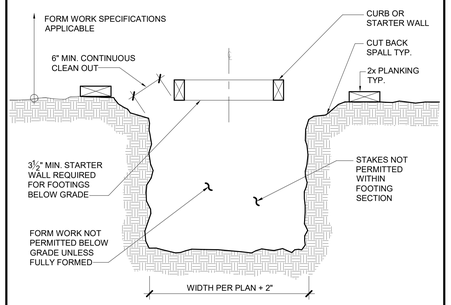

NOTES:
1. USE THIS STARTER WALL DETAIL FOR ALL MASONRY AND CONC. WALLS UNLESS FULLY FORMED.
2. FOUNDATION CONC. MAY BE PLACED DIRECTLY INTO NEAT EXCAVATIONS PROVIDED THE FOUNDATION TRENCH WALLS ARE STABLE AS DETERMINED BY THE SOIL ENGINEER. IN SUCH CASE, THE MINIMUM FORM WORK SHOWN ON THE DRAWINGS IS MANDATORY TO INSURE CLEAN EXCAVATIONS IMMEDIATELY PRIOR TO AND DURING THE PLACING OF CONCRETE.
3. CLEAN ALL PROPOSED CONCRETE CONTACT SURFACES AFTER CONCRETE HAS SET.

TYPICAL UNFORMED FOOTING | 1" = 1'-0" | 1

APPROVAL

CITY APPROVED BY:
DIRECTOR OF PUBLIC WORKS DATE
CITY REVIEWED BY:
SENIOR ENGINEER DATE
SUBMITTED BY:
DATE

CLIENT
LANCASTER
Creating a better tomorrow. Together.
CITY OF LANCASTER
44933 FERN AVENUE
LANCASTER, CA 93534

PROJECT NAME
EL DORADO PARK RENOVATION
PWCP NO. 24-008
44501 5TH ST EAST
LANCASTER, CA 93535

ENGINEER/ARCHITECT
IDS
IDS GROUP
1 PETERS CANYON ROAD, SUITE 130
IRVINE, CA 92606
TEL: 949-387-8500, FAX: 949-387-0800

STAMP
REGISTERED PROFESSIONAL ENGINEER
CHAD L. HILLIARD
No. 3680
STRUCTURAL
STATE OF CALIFORNIA

ISSUE

REV.	DESCRIPTION	DATE
	30% CD SET	12/15/23
	60% CD SET	01/12/24
	90% CD SET	02/02/24
1	CLIENT REVISIONS	04/26/24
	COMPOSITE SET	9/24/25

PROJECT IDENTIFICATION
THIS DRAWING WAS CREATED IN REVIT V. 2020 UNLESS OTHERWISE NOTED.
THE ORIGINAL SIZE OF THIS SHEET IS 30" X 42"
THESE DRAWINGS AND SPECIFICATIONS ARE THE PROPERTY AND COPYRIGHT OF IDS GROUP AND SHALL NOT BE USED ON ANY OTHER PROJECT OR LOCATIONS EXCEPT AS DESCRIBED ON THE DRAWINGS, WITHOUT THE WRITTEN AGREEMENT WITH IDS GROUP.

IDS PROJECT NO.	22X099.03
IDS DRAWN BY	YY
IDS CHECKED BY	CK/VM
IDS APPROVED BY	

SHEET TITLE
TYPICAL CONCRETE DETAILS

SHEET NUMBER
S-500

IDS GROUP - FILE LOCATION: \\IDS-FS1\Shared\PROJECTS\2022\Shared\22X099.01 LANC - El Dorado Park\04 BIM\03 Struc\22X099.01_ Lanc El Dorado Park_Pump House_Struct_NT72.rvt
PLOT DATE: 4/26/2024 5:28:47 PM
USER: Author

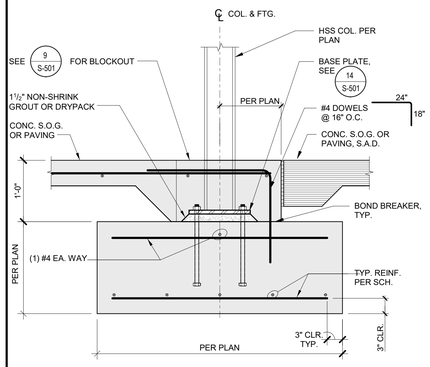

TYP. EXTERIOR COLUMN FOOTING | 1" = 1'-0" | 20

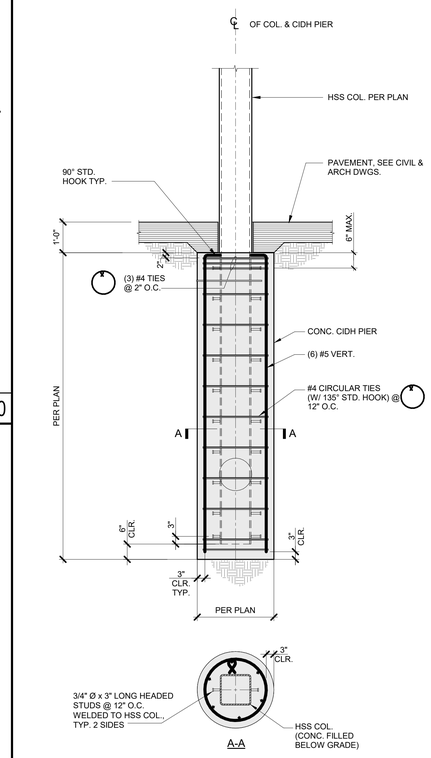

NOTE:
1. SEE GEOTECHNICAL INVESTIGATION REPORT AND FOLLOW ALL REQUIREMENTS FOR SOIL PREPARATION AND CONSTRUCTION OF CIDH PIERS.

TYP. CIDH FOOTING | 1/2" = 1'-0" | 11

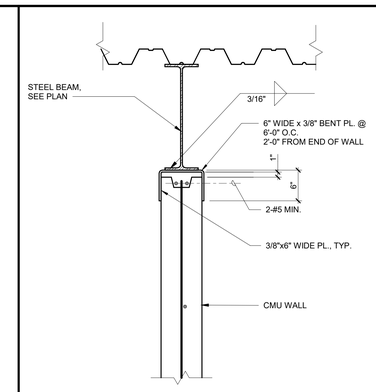

CMU ANCHOR TO FLOOR FRAMING | 1" = 1'-0" | 8

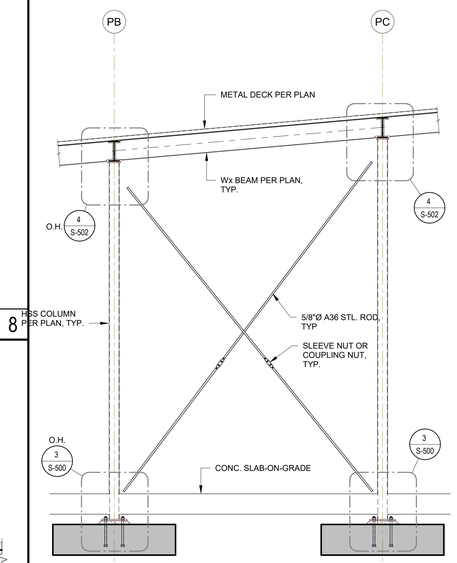

ELEVATION | 1/2" = 1'-0" | 3

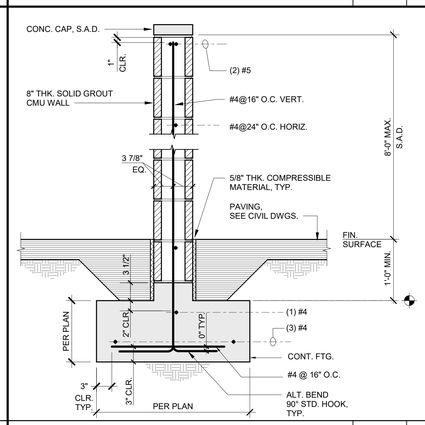

TYP. MASONRY SITE WALL | 1" = 1'-0" | 15

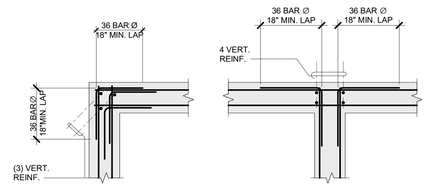

TYP. REINF. AT CONC. FTG. INTERSECTION | 1" = 1'-0" | 7

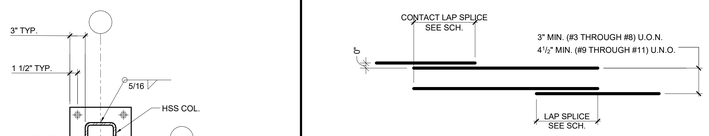

REINF. SIZE	f'm = 1,500 PSI fy = 60,000 PSI (TYP. U.N.O.)	PIER + JAMB REINF. U.N.O.
#3	21"	36"
#4	28"	48"
#5	35"	61"
#6	42"	73"
#7	49"	85"
#8	56"	97"
#9	63"	109"

TYP. REINF. LAP SPLICE AT CMU WALL | 1" = 1'-0" | 10.

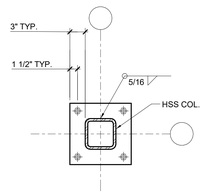

DETAIL 'A'

BASE PLATE AND ANCHORS SCHEDULE

COLUMN SIZE	BASE PLATE	ANCHORS	DETAIL
HSS4x4, HSS6x6	3/4"x12"x12"	"(4) 3/4"∅ x10" LG. HEADED BOLT (ASTM A-36) ANCHORS W/ LEVELING NUT, TYP.	A
HSS6.625	1"x13"x13"	(4) 1" Ø x18" LG. HEADED BOLT (ASTM A-36) ANCHORS W/ LEVELING NUT	A

TYP. BASE PLATE CONNECTION | 1" = 1'-0" | 14

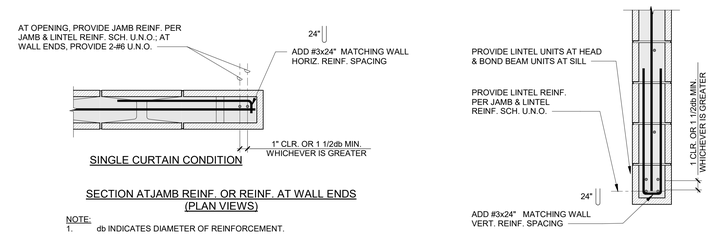

SINGLE CURTAIN CONDITION

SECTION ATJAMB REINF. OR REINF. AT WALL ENDS (PLAN VIEWS)

NOTE:
1. db INDICATES DIAMETER OF REINFORCEMENT.

SECTION AT LINTEL REINF. (SILL CONDITION SIMILAR)

SINGLE CURTAIN CONDITION

TYP. CMU CONSTRUCTION AT OPENINGS & WALL ENDS | 1" = 1'-0" | 2

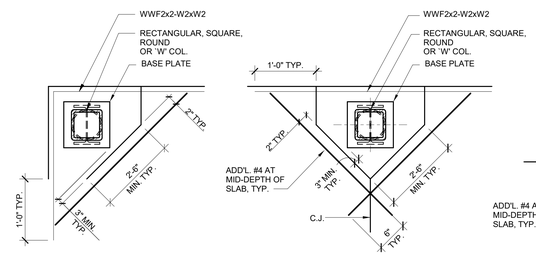

CASE C

CASE B

CASE A

NOTE:
1. POUR JOINTS REQUIRED ONLY IF SLAB IS PLACED BEFORE STL. COLS..

TYP. POUR JOINT IN SLAB-ON-GRADE AT COLS. | 1" = 1'-0" | 9

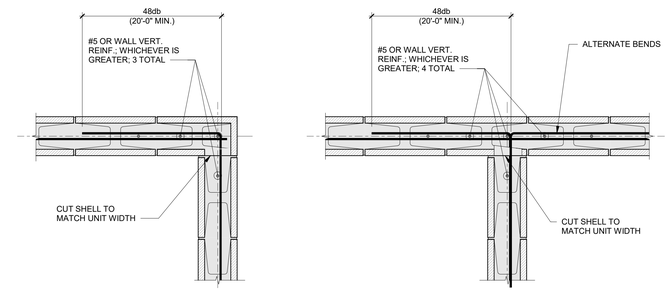

CORNER (SINGLE CURTAIN)

INTERSECTION (SINGLE CURTAIN)

TYP. CMU CONSTRUCTION AT CORNERS & INTERSECTIONS (PLAN VIEWS) | 1" = 1'-0" | 1

APPROVAL

CITY APPROVED BY:
DIRECTOR OF PUBLIC WORKS — DATE
CITY REVIEWED BY:
SENIOR ENGINEER — DATE
SUBMITTED BY:
DATE

CLIENT
LANCASTER
Creating a better tomorrow. Together.
CITY OF LANCASTER
44933 FERN AVENUE
LANCASTER, CA 93534

PROJECT NAME
EL DORADO PARK RENOVATION
PWCP NO. 24-008
44501 5TH ST EAST
LANCASTER, CA 93535

ENGINEER/ARCHITECT
IDS
IDS GROUP
1 PETERS CANYON ROAD, SUITE 130
IRVINE, CA. 92606
TEL: 949-387-8500, FAX: 949-387-0800

STAMP
REGISTERED PROFESSIONAL ENGINEER
JOHN L. HILLS
No. 3680
STRUCTURAL
STATE OF CALIFORNIA

ISSUE

REV.	DESCRIPTION	DATE
	30% CD SET	12/15/23
	60% CD SET	01/12/24
	90% CD SET	02/02/24
1	CLIENT REVISIONS	04/26/24
	COMPOSITE SET	9/24/25

PROJECT IDENTIFICATION
THIS DRAWING WAS CREATED IN REVIT V. 2020 UNLESS OTHERWISE NOTED.
THE ORIGINAL SIZE OF THIS SHEET IS 30" X 42"
THESE DRAWINGS AND SPECIFICATIONS ARE THE PROPERTY AND COPYRIGHT OF IDS GROUP AND SHALL NOT BE USED ON ANY OTHER PROJECT OR LOCATIONS EXCEPT AS DESCRIBED ON THE DRAWINGS, WITHOUT THE WRITTEN AGREEMENT WITH IDS GROUP.

IDS PROJECT NO.	22X099.03
IDS DRAWN BY	YY
IDS CHECKED BY	CK/VM
IDS APPROVED BY	

SHEET TITLE
CONCRETE & MASONRY DETAILS

SHEET NUMBER
S-501

IDS GROUP - FILE LOCATION: \\IDS-FS1\Shared\PROJECTS\2022\Shared\22X099.01 LANC - El Dorado Park\04 BIM\03 Struc\22X099.01_ Lanc El Dorado Park_Pump House_Struct_R17.rvt
PLOT DATE: 4/26/2024 5:28:47 PM
USER: Author

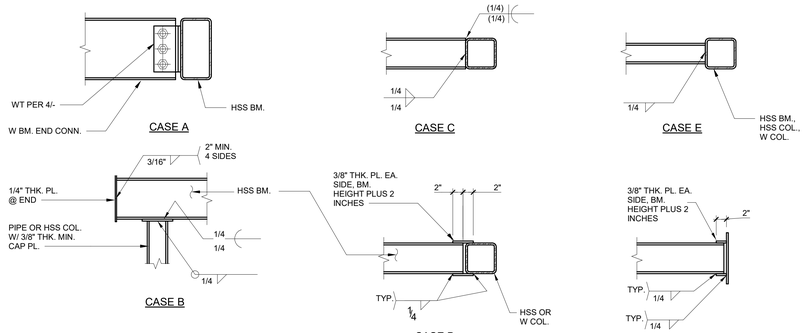

NOTE:
ALL WELDS MAY BE EITHER SHOP WELDS OR FIELD WELDS AT THE CONTRACTOR'S OPTION

TYP. HSS BM. END CONNECTION | 1" = 1'-0" | 12

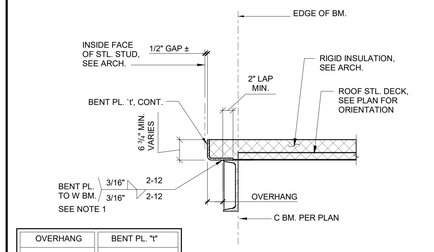

OVERHANG	BENT PL. "t"
0" - 6"	5/16"
6" - 9"	5/16"
9" - 12"	5/16"
12" - 17"	STIFFEN PER 1/-

TYP. EDGE OF ROOF STL. DECK | 1" = 1'-0" | 8

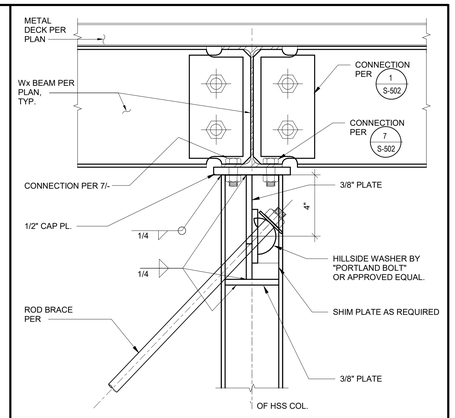

PUMP HOUSE TOP BRACE CONNECTION | 3" = 1'-0" | 4

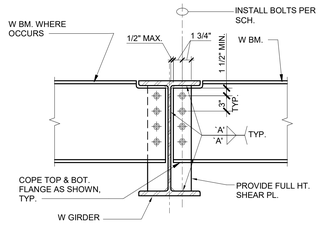

STANDARD BOLTED CONNECTION SCHEDULE			
BEAM SIZE	NO. & SIZE OF BOLTS REQUIRED	SHEAR PLATE THICKNESS	WELD SIZE 'A'
W8, C8x, C9x	2-7/8" Ø	3/8"	5/16"

CONNECTION NOTES:
1. ALL BOLTS TO BE ASTM A325N ST BOLTS U.N.O..
2. CONNECTION PLATES TO HAVE AISC STANDARD ROUND HOLES U.N.O..
3. ALL CONNECTION PLATE MATERIAL TO BE A36 U.N.O..
4. NO SHIMS OR FILLERS > 1/4" SHALL BE USED AT BOLTED CONNECTIONS WITHOUT PRIOR REVIEW AND APPROVAL FROM S.E.O.R AND DSA.

TYP. BOLTED W BM. CONNECTION | 1" = 1'-0" | 11

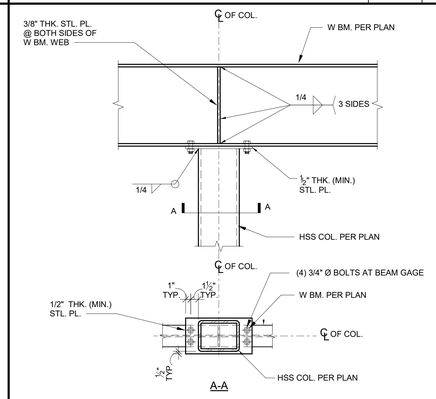

TYP. W BM. OVER HSS COL. | 1" = 1'-0" | 7

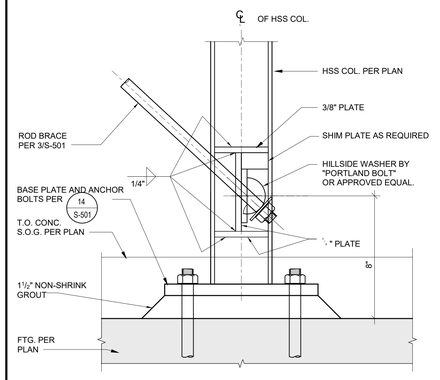

PUMP HOUSE BOTTOM BRACE CONNECTION | 3" = 1'-0" | 3

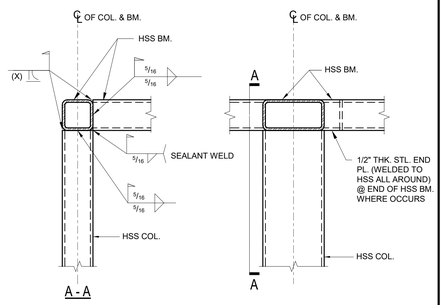

TYP. HSS BM. AT HSS COL. | 1" = 1'-0" | 10

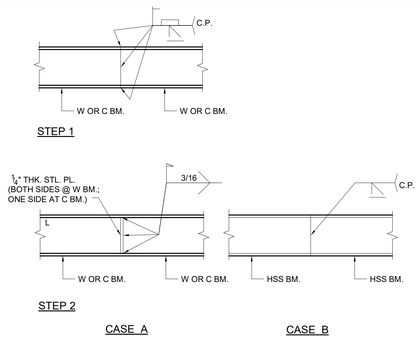

NOTES:
1. BOTH STEP 1 AND STEP 2 ARE REQUIRED FOR CASE A
2. GRIND EXTERIOR JOINT SURFACES SMOOTH AFTER WELDING.

TYP. HSS, C OR W SPLICE | 1" = 1'-0" | 6

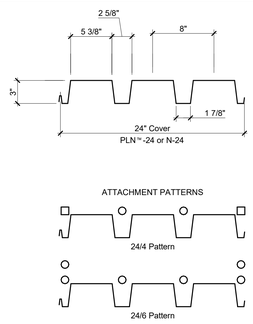

○ = ARC SPOT WELD AT INTERIOR BOTTOM FLUTES OR MECHANICAL FASTENER
□ = ARC SEAM WELD ADJACENT TO SIDELAP OR MECHANICAL FASTENER

STEEL DECK SECTION | 1 1/2" = 1'-0" | 5

STANDARD BOLTED CONNECTION SCHEDULE			
BEAM SIZE	NO. & SIZE OF BOLTS REQUIRED	SHEAR PLATE THICKNESS	WELD SIZE 'A'
W8, C8x, C9x	2-7/8" Ø	3/8"	5/16"

CONNECTION NOTES:
1. ALL BOLTS TO BE ASTM A325N ST BOLTS U.N.O..
2. CONNECTION PLATES TO HAVE AISC STANDARD ROUND HOLES U.N.O..
3. ALL CONNECTION PLATE MATERIAL TO BE A36 U.N.O..
4. NO SHIMS OR FILLERS > 14" SHALL BE USED AT BOLTED CONNECTIONS WITHOUT PRIOR REVIEW AND APPROVAL FROM S.E.O.R AND DSA.

TYP. BOLTED W BM. CONNECTION | 1" = 1'-0" | 1

APPROVAL

CITY APPROVED BY:
DIRECTOR OF PUBLIC WORKS — DATE
CITY REVIEWED BY:
SENIOR ENGINEER — DATE
SUBMITTED BY:
DATE

CLIENT
LANCASTER
Creating a better tomorrow. Together.
CITY OF LANCASTER
44933 FERN AVENUE
LANCASTER, CA 93534

PROJECT NAME
EL DORADO PARK RENOVATION
PWCP NO. 24-008
44501 5TH ST EAST
LANCASTER, CA 93535

ENGINEER/ARCHITECT
IDS
IDS GROUP
1 PETERS CANYON ROAD, SUITE 130
IRVINE, CA. 92606
TEL: 949-387-8500, FAX: 949-387-0800

STAMP
REGISTERED PROFESSIONAL ENGINEER
CHAD L. HILL
No. 3680
STRUCTURAL
STATE OF CALIFORNIA

ISSUE

REV.	DESCRIPTION	DATE
	30% CD SET	12/15/23
	60% CD SET	01/12/24
	90% CD SET	02/02/24
1	CLIENT REVISIONS	04/26/24
	COMPOSITE SET	9/24/25

PROJECT IDENTIFICATION
THIS DRAWING WAS CREATED IN REVIT V. 2020 UNLESS OTHERWISE NOTED.
THE ORIGINAL SIZE OF THIS SHEET IS 30" X 42"
THESE DRAWINGS AND SPECIFICATIONS ARE THE PROPERTY AND COPYRIGHT OF IDS GROUP AND SHALL NOT BE USED ON ANY OTHER PROJECT OR LOCATIONS EXCEPT AS DESCRIBED ON THE DRAWINGS, WITHOUT THE WRITTEN AGREEMENT WITH IDS GROUP.

IDS PROJECT NO.	22X099.03
IDS DRAWN BY	YY
IDS CHECKED BY	CK/VM
IDS APPROVED BY	

SHEET TITLE
STEEL DETAILS

SHEET NUMBER
S-502

IDS GROUP - FILE LOCATION: \\IDS-FS1\Shared\PROJECTS\2022\Shared\22X099.01 LANC - El Dorado Park\04 BIM\03 Struc\22X099.01_ Lanc El Dorado Park_Pump House_Struct_R21.rvt
PLOT DATE: 4/26/2024 5:28:47 PM
USER: Author

LEGEND & ABBREVIATIONS

SYMBOL	ABB.	DESCRIPTION	SYMBOL	ABB.	DESCRIPTION
	SAD	AIR SUPPLY DUCT		S/S	STAINLESS STEEL
	RAD	RETURN AIR DUCT		AC	AIR CONDITIONING UNIT
	OSA	OUTSIDE AIR		AP	ACCESS PANEL
	EAD	EXHAUST AIR DUCT		B.D.D.	BACK DRAFT DAMPER
	CA	COMBUSTION AIR		CB	CIRCUIT BREAKER
	(L)	LINED DUCTWORK		CFM	CUBIC FEET PER MINUTE
	CD	CEILING DIFFUSER		CONC.	CONCRETE
	RG	RETURN GRILLE		COND.	CONDENSATE
	EG	EXHAUST GRILLE		D.B.	DRY BULB
	TG	TRANSFER GRILLE		DN.	DOWN
	SWS	SIDEWALL SUPPLY REGISTER		ENT.	ENTERING
	SWG	SIDEWALL RETURN GRILL		EF	EXHAUST FAN
	SWR	SIDEWALL EXHAUST REGISTER		E.S.P.	EXTERNAL STATIC PRESSURE (INCHES OF WATER)
	FC	FLEXIBLE CONNECTION		TYP.	TYPICAL
	MVD	MANUAL VOLUME DAMPER		A.F.F	ABOVE FINISHED FLOOR
	QBD	QUADRANT BALANCING DAMPER		FLA.	FULL LOAD AMPS
	OBD	OPPOSED BALANCING DAMPER		FT.	FEET
	DL	DOOR LOUVER		GC	GENERAL CONTRACTOR
	UC	UNDERCUT DOOR		HP	HORSEPOWER
	T'STAT	ROOM THERMOSTAT		BHP	BRAKE HORSEPOWER
	CO2	CARBON DIOXIDE SENSOR		IN.	INCHES
	VFD	VARIABLE FREQUENCY DRIVE		KW	KILOWATTS
	S.A.	SUPPLY AIR		L.R.A.	LOCKED ROTOR AMPS
	R.A.	RETURN AIR		M.C.A.	MINIMUM CIRCUIT AMPS
	E.A.	EXHAUST AIR		R.L.A.	RATED LOAD AMPS
	T.A.	TRANSFER AIR		M.O.C.P.	MAX. OVER CURRENT PROTEC. AMPS
	O.S.A.	OUTSIDE AIR		PH	PHASE
	TYP.	TYPICAL		FD	FUSED DISCONNECT
	CSFD	COMBINATION SMOKE-FIRE DAMPER		NFD	NON FUSED DISCONNECT
	MBD	MOTORIZED BACKDRAFT DAMPER		NFD	NON FUSED DISCONNECT
	MVD	MANUAL VOLUME DAMPER		PRESS.	PRESSURE
	OBD	OPPOSED BLADE DAMPER		RPM	REVOLUTIONS PER MINUTE
	HVAC	HEATING, VENTILATION, AND AIR CONDITIONING		MIN.	MINIMUM
	VAV	VARIABLE AIR VOLUME FLOW		B.O.D.	BOTTOM OF SHEET METAL DUCT
	CAV	CONSTANT AIR VOLUME FLOW		A.F.F.	ABOVE FINISHED FLOOR
	DCV	DEMAND CONTROL VENTILATION		UTR	UP THRU ROOF
	ECM	ELECTRONICALLY COMMUTATED MOTOR		DTR	DOWN THRU ROOF
SD	SD	SMOKE DETECTOR		FFU	FAN FILTER UNIT
				SWS	SIDEWALL SUPPLY REGISTER
				SWR	SIDEWALL RETURN GRILLE

DUCT LINERS AND INSULATION

COMPLY WITH 2022 CALIFORNIA ENERGY CODE SECTION 120.4: REQUIREMENTS FOR AIR DISTRIBUTION SYSTEM DUCTS AND PLENUMS:

1. PORTIONS OF SUPPLY-AIR AND RETURN-AIR CONVEYING HEATED OR COOLED AIR LOCATED OUTDOORS, SPACES BETWEEN ROOF AND INSULATED CEILINGS, SPACES UNDER A ROOF WITH FIXED VENTS OR OPENINGS TO THE OUTSIDE OR UNCONDITIONED SPACES, UNCONDITIONED CRAWL SPACE, AND OTHER UNCONDITIONED CRAWL SPACE SHALL BE INSULATED OR/AND LINED TO A MINIMUM INSTALLED LEVEL OF R-8. .
2. PORTIONS OF THE SAME DUCTS THAT ARE NOT IN ONE OF THE SPACES ENUMERATED ABOVE, DUCTS IN INDIRECTLY CONDITIONED SPACES SUCH AS DUCT SPACE ABOVE THE CEILING, SHALL BE INSULATED OR LINED TO A MINIMUM INSTALLED LEVEL OF R-4.2 (OR ANY HIGHER LEVEL REQUIRED BY CMC SECTION 605.0.
3. COMBINATION DUCT LINER AND DUCT WRAP INSULATION MAY BE USED TO ACHIEVE THE INSTALLED MINIMUM R-VALUES DESCRIBED ABOVE.
4. SUPPLY AND RETURN DUCTWORK EXPOSED OUTSIDE THE BUILDING SHALL BE INTERNALLY LINED WITH 2" THICK R-8 LINER, AND INDOOR LINED DUCTS SHALL BE INSTALLED WITH 1" THICK DUCT LINER R-4.2 UNLESS OTHER WISE EXPLICITLY INDICATED ON PLANS.
5. INDOOR DUCTS CARRYING UNTEMPERED MAKE UP OUTSIDE AIR SHALL BE INSULATED WITH R-4.2 DUCT WRAP INSULATION WITH VAPOR BARRIER TO PREVENT CONDENSATION.

DUCT MATERIAL SCHEDULE

SERVICES	APPLICATION	MATERIAL	REMARKS
SUPPLY & RETURN	INDOOR MEDIUM PRESSURE IN CONDITIONED SPACE	GALVANIZED STEEL G90	R-6 , 1-1/2" THICK 3 LB ARMACELL DUCT LINER SYSTEM FOR ACOUSTICAL AND THERMAL CONTROL. R-4.2 1-1/2" THICK FOIL FACED FIBERGLASS INSULATION
SUPPLY & RETURN	INDOOR MEDIUM PRESSURE IN UNCONDITIONED SPACE	GALVANIZED STEEL G90	R-8 2" THICK 3 LB ARMACELL DUCT LINER SYSTEM FOR ACOUSTICAL AND THERMAL CONTROL. R-8 2" THICK FOIL FACED FIBERGLASS INSULATION
GENERAL EXHAUST	INDOOR	GALVANIZED STEEL G90	UNINSULATED

NOTES:
1. DUCT INSULATION PER CEC 2022 BUILDING EFFICIENCY STANDARDS SECTION 120.4
   A. DUCTS WITHIN CONDITIONED SPACE OR WITHIN PLENUM SHALL HAVE INSULATION VALUE OF R4.2
3. AIR DISTRIBUTION SYSTEM DUCTS AND PLENUMS, INCLUDING BUT NOT LIMITED TO BUILDING CAVITIES, MECHANICAL CLOSETS, AIR HANDLER BOXES AND SUPPORT PLATFORMS SHALL BE SEALED AND INSULATED PER CHAPTER 6 OF THE CMC:
   A. SUPPLY DUCTS AND PLENUMS FROM AIR HANDLER FAN DISCHARGE TO VAV TERMINAL - SEAL CLASS "A" FOR 4" W.G.
   B. SUPPLY DUCTS AND PLENUMS DOWNSTREAM OF VAV TERMINALS - SEAL CLASS" B" FOR 1" W.G.
   C. EXHAUST DUCTS AND PLENUMS WITHIN THE BUILDING ENVELOP - SEAL CLASS "A" FOR 2" W.G.
   D. RETURN AIR DUCTS AND PLENUMS WITHIN THE BUILDING ENVELOPE. - SEAL CLASS "B" FOR 2" W.G.
   E. CURB PLENUMS FOR RETURN - SEAL CLASS "A"
4. ACCESS DOORS INTO DUCTS SHALL BE DUCTMATE "SANDWICH" STYLE INSULATED AND GASKETED WITH HAND KNOBS. MINIMUM 24"X18".
5. SUPPLY AIR, RETURN AIR, AND OUTSIDE AIR FOR HEATING, COOLING OR EVAPORATIVE COOLING SYSTEMS SHALL BE CONDUCTED THROUGH DUCT SYSTEMS CONSTRUCTED OF METAL AS SET FORTH IN THE ANSI/SMACNA HVAC DUCT CONSTRUCTION STANDARDS-METAL AND FLEXIBLE, OR ANOTHER APPROVED DUCT CONSTRUCTION STANDARD.
6. DUCT SYSTEMS USED WITH BLOWER TYPE EQUIPMENT WHICH ARE PORTIONS OF HEATING, COOLING, ABSORPTION, EVAPORATIVE COOLING OR OUTDOOR AIR VENTILATION SYSTEM SHALL BE SIZED IN ACCORDANCE WITH STANDARDS LISTED IN CHAPTER 17 OF 2022 CALIFORNIA MECHANICAL CODE.
7. COMBINATION DUCT LINER AND DUCT WRAP INSULATION MAY BE USED TO ACHIEVE THE INSTALLED MINIMUM R-VALUES DESCRIBED ABOVE.
8. FIBERGLASS LINING NOT ALLOWED IN SYSTEMS SERVED BY RTU - 3, 4, & 5. DUCTS CAN BE WRAPPED OR SHALL USE ARMACELL LINING.

GENERAL CONSTRUCTION NOTES

1. INSTALLATION SHALL CONFORM TO THE REQUIREMENTS OF THE 2022 CALIFORNIA MECHANICAL CODE, 2022 CALIFORNIA BUILDING CODE, AND OTHER APPLICABLE CODES AND REGULATIONS, INCLUDING 2022 CALIFORNIA ENERGY CONSERVATION STANDARDS DIVISION 1-20.
2. THE DESIGN DRAWINGS AND PLANS ARE DIAGRAMMATIC IN NATURE. PROVIDE LABOR, MATERIALS, AND INCIDENTALS NECESSARY OR REQUIRED FOR THE INSPECTION, TESTING, ADJUSTMENT AND COMPLETION IN ALL RESPECTS FOR PROPER AND SMOOTH OPERATION OF THE MECHANICAL SYSTEMS.
3. COORDINATE INSTALLATION OF THE H.V.A.C. SYSTEM WITH THE WORK OF OTHER TRADES PRIOR TO ANY FABRICATION OR INSTALLATION. PROVIDE FITTINGS, OFFSETS, TRANSITIONS AND APPURTENANCES REQUIRED FOR A SMOOTHLY FUNCTIONING INSTALLATION. IF WORK CANNOT BE INSTALLED IN ACCORDANCE WITH THE CONTRACT DOCUMENTS FOR ANY REASON, NOTIFY ENGINEER FOR DIRECTION PRIOR TO EXECUTION OF WORK. THE CONTRACTOR MAY BE RESPONSIBLE FOR REMOVING WORK INSTALLED AT NO ADDITIONAL COMPENSATION.
4. COORDINATE THE LOCATION OF CEILING DIFFUSERS, SIDEWALL REGISTERS AND GRILLES WITH THE ARCHITECTURAL CEILING AND LIGHTING LAYOUT.
5. IF IT IS NECESSARY TO INSTALL WORK ABOVE AN INACCESSIBLE (HARD) CEILING, PROVIDE ACCESS PANELS AS REQUIRED TO PERMIT ACCESS. COORDINATE ACCESS PANEL LOCATIONS WITH THE ASSOCIATED EQUIPMENT LOCATIONS. SHOW ACCESS PANELS ON SHOP DRAWINGS. INSTALL ACCESS PANELS IN WALLS OR CR CEILINGS.
6. COORDINATE THE LOCATION OF ROOF OPENINGS AND THE LOCATION OF ROOF MOUNTED EQUIPMENT WITH THE STRUCTURAL PLANS PRIOR TO INSTALLATION. MECHANICAL CONTRACTOR TO PROVIDE EQUIPMENT WEIGHTS, PLATFORM AND CURB SIZES AND ROOF AND WALL OPENING SIZES TO THE GENERAL CONTRACTOR.
7. PLATFORMS, CURBS AND FLASHINGS FOR MECHANICAL EQUIPMENT SHALL BE AS INDICATED ON THE PLANS, UNLESS NOTED OTHERWISE.
8. EQUIPMENT SHALL BE INSTALLED IN STRICT ACCORDANCE WITH THE EQUIPMENT MANUFACTURER'S INSTRUCTIONS AND RECOMMENDATIONS. PROVIDE FITTINGS, TRANSITIONS, DAMPERS, VALVES, DEVICES AND MATERIALS REQUIRED FOR A COMPLETE WORKING INSTALLATION.
9. COORDINATE WITH ALL OTHER TRADES THE LOCATIONS OF THERMOSTATS, SENSORS AND OTHER DEVICES PRIOR TO INSTALLATION.
10. MAINTENANCE LABELS SHALL BE AFFIXED TO MECHANICAL EQUIPMENT AND A MAINTENANCE MANUAL (SIX COPIES) SHALL BE PROVIDED FOR THE OWNER'S USE.
11. DUCTWORK SHALL BE CONSTRUCTED, ERECTED AND TESTED IN ACCORDANCE WITH THE MOST RESTRICTIVE OF PROCEDURES DETAILED IN THE ASHRAE HANDBOOK OF FUNDAMENTALS OR THE APPLICABLE STANDARDS ADOPTED BY THE SHEET METAL AND AIR CONDITIONING CONTRACTORS NATIONAL ASSOCIATION. A COPY OF THE SMACNA STANDARDS SHALL BE KEPT AT THE JOB FOR REFERENCE BY THOSE REVIEWING THE WORK.
12. FOR GRAVITY HANGING SUPPORTS, AND SEISMIC BRACING OF HVAC DUCTWORK, PIPING AND EQUIPMENT, REFER TO DETAILS IN SHEETS M-X.
13. DUCTWORK SHALL BE INSULATED OR LINED (L) AS NOTED ON DRAWINGS. DUCTWORK EXPOSED ON ROOF SHALL BE INTERNALLY LINED UNLESS OTHERWISE INDICATED OR SPECIFIED. LINED RECTANGULAR AND ROUND DUCT SIZES INDICATED ARE SHEET METAL SIZES. DUCT JOINTS SHALL BE SEALED. INSULATION SHALL HAVE A FLAME SPREAD OF NOT MORE THAN 25 AND A SMOKE DENSITY NOT EXCEEDING 50.
14. PROVIDE CODE-COMPLIANT FIRE/SOUND STOPPING AT DUCT, PIPING, CONDUIT PENETRATIONS THROUGH ALL TYPES OF BUILDING CONSTRUCTION TO ACHIEVE FIRE, SMOKE, AND SOUND RATINGS, SUCH AS AT DUCT ROOF DECK PENETRATIONS ASSOCIATED WITH ROOF-MOUNTED EQUIPMENT.
15. WHETHER INDICATED OR NOT ON THE MECHANICAL PLANS, MANUAL VOLUME DAMPERS SHALL BE INSTALLED AT DUCT BRANCHES TO INDIVIDUAL DIFFUSERS, GRILLES, AND REGISTERS. WHERE DAMPERS ARE NOT ACCESSIBLE ABOVE HARD LID CEILING, PROVIDE YOUNG REGULATOR REMOTE CABLE-OPERATED DAMPER COMPLETE WITH CEILING KEY ESCUTCHEON, OR REMOTE ELECTRONIC BALANCING DAMPER WITH EBO-301 RECESSED CEILING UNIT.
16. EQUIPMENT, DUCTS, PIPING, INSULATION, FLEX CONNECTIONS, CONTROL ITEMS, AND OTHER DEVICES AND MATERIALS INSTALLED OUTSIDE OF THE BUILDING OR OTHERWISE EXPOSED TO THE WEATHER SHALL BE WEATHERPROOFED.
17. PRIOR TO OCCUPANCY, INSTALL MIN. MERV 13 FILTERS (SEE EQUIP. SCHEDULE FOR MERV RATING) FOR OUTSIDE AND RETURN AIR. HVAC UNITS FILTERS SHALL BE STATE FIRE MARSHAL APPROVED AND LISTED. PRE-FORMED FILTERS HAVING COMBUSTIBLE FRAMING SHALL BE TESTED AS A COMPLETE ASSEMBLY. AIR FILTERS IN ALL OCCUPANCIES SHALL BE CLASS 2 OR BETTER (AS SHOWN IN THE STATE FIRE MARSHAL LISTING). AIR FILTERS SHALL BE ACCESSIBLE FOR REPLACEMENT OF THE SAME TYPE AND MERV RATING FOR OPERATION & MAINTENANCE.
18. PROVIDE AUTOMATIC FIRE DAMPERS, SMOKE DAMPERS OR COMBINATION SMOKE/FIRE DAMPERS AT PENETRATIONS OF FIRE RATED CONSTRUCTION THROUGHOUT WHETHER INDICATED OR NOT ON MECHANICAL. CONTRACTOR SHALL VERIFY EXISTING WALL CONSTRUCTION. DAMPERS SHALL BE MANUFACTURED AND INSTALLED IN COMPLIANCE WITH CHAPTERS 7 AND 9 OF THE CALIFORNIA BUILDING CODE, AND CHAPTER 6 OF THE CALIFORNIA MECHANICAL CODE.
19. PROVIDE LABEL TAGS AT BOTTOM OF CEILING AND CEILING ACCESS PANELS TO INDICATE THE LOCATION AND IDENTIFICATION OF HVAC EQUIPMENT, CONTROL VALVES, FIRE AND SMOKE DAMPERS AND OTHER HVAC ITEMS ABOVE CEILING THAT REQUIRE MAINTENANCE SERVICE.
20. HVAC EQUIPMENT SHALL BE CERTIFIED BY THE CALIFORNIA ENERGY COMMISSION TO COMPLY WITH EFFICIENCY STANDARDS PER TITLE 24, PART 6, SECTIONS 111 AND 112.
21. APPLIANCE AND PLUMBING VENTS SHALL BE AT LEAST TEN (10) FEET IN A HORIZONTAL DIRECTION, OR THREE (3) FEET ABOVE THE OUTSIDE AIR INTAKES OF ALL HVAC UNITS.
22. POLLUTANT CONTROL: AT THE TIME OF ROUGH INSTALLATION AND DURING STORAGE ON THE CONSTRUCTION SITE UNTIL FINAL STARTUP OF THE HEATING, COOLING, AND VENTILATING EQUIPMENT, DUCT AND OTHER RELATED AIR DISTRIBUTION COMPONENT OPENINGS SHALL BE COVERED WITH TAPE, PLASTIC, SHEET METAL OR OTHER METHODS ACCEPTABLE TO THE ENFORCING AGENCY TO REDUCE THE AMOUNT OF DUST, WATER, AND DEBRIS WHICH MAY ENTER THE SYSTEM.
23. TEST AND BALANCE CONTRACTOR SHALL BE AN INDEPENDENT, AABC CERTIFIED, THIRD PARTY AGENT. TEST AND BALANCE CONTRACTOR SHALL OBTAIN, COMPLY, FILL OUT, AND SUBMIT TO THE COMMISSIONING AGENT COPIES OF THE CERTIFICATE OF COMPLIANCE AND REQUIRED ACCEPTANCE TEST FORMS AND ALL OTHER PROCESS COMPLIANCE FORMS AND WORKSHEETS REQUIRED BY THIS PROJECT.
24. UPON COMPLETION OF TESTING, OPERATE EQUIPMENT TO VERIFY THAT SYSTEMS FUNCTION PROPERLY. AFTER VERIFYING THE PROPER OPERATION, DEMONSTRATE THE OPERATION OF SYSTEMS AND EQUIPMENT TO THE OWNER'S REPRESENTATIVES. PROVIDE ONE WEEK NOTICE AND SCHEDULE THE DEMONSTRATION WITH THE OWNER.

APPLICABLE CODES & STANDARDS

2022 CALIFORNIA BUILDING STANDARDS ADMINISTRATIVE CODE, TITLE 24 C.C.R.
2022 CALIFORNIA BUILDING CODE (CBC), TITLE 24 C.C.R.
2022 CALIFORNIA ELECTRICAL CODE (CEC), TITLE 24 C.C.R.
2022 CALIFORNIA MECHANICAL CODE (CMC), TITLE 24 C.C.R.
2022 CALIFORNIA PLUMBING CODE (CPC), TITLE 24 C.C.R.
2022 CALIFORNIA GREEN BUILDING CODE (CGBC)
2022 CALIFORNIA ENERGY CODE
2022 NATIONAL FIRE PROTECTION ASSOCIATION (NFPA)
ANY OTHER LOCAL AND STATE LAWS AND REGULATIONS

MECHANICAL SHEET INDEX

S.No.	SHEET NUMBER	SHEET TITLE	SCALE
1	M-001	MECHANICAL NOTES, LEGEND AND ABBREVIATIONS	NO SCALE
2	M-002	MECHANICAL SCHEDULES	NO SCALE
3	M-111	MECHANICAL DEMOLITION FLOOR AND ROOF PLAN	1/4" = 1'-0"
4	M-201	MECHANICAL PROPOSED FLOOR AND ROOF PLAN	1/4" = 1'-0"
5	M-501	MECHANICAL DETAILS	NO SCALE
6	M-502	MECHANICAL DETAILS	NO SCALE
7	M-601	TITLE 24 DOCUMENTATION	NO SCALE

EQUIPMENT ANCHORAGE & SEISMIC NOTES

MEP COMPONENT ANCHORAGE NOTE:

MECHANICAL, PLUMBING, AND ELECTRICAL COMPONENTS SHALL BE ANCHORED AND INSTALLED PER THE DETAILS ON THE APPROVED CONSTRUCTION DOCUMENTS. WHERE NO DETAIL IS INDICATED, THE FOLLOWING COMPONENTS SHALL BE ANCHORED AND/OR BRACED TO MEET THE FORCE AND DISPLACEMENT REQUIREMENTS PRESCRIBED IN THE 2022 CBC, SECTIONS 1616A.1.18 THROUGH 1616A.1.26 AND ASCE 7-10 CHAPTER 13, 26 AND 30.

1. PERMANENT EQUIPMENT AND COMPONENTS.
2. TEMPORARY OR MOVABLE EQUIPMENT THAT IS PERMANENTLY ATTACHED (e.g. HARDWIRED) TO THE BUILDING UTILITY SERVICES SUCH AS ELECTRICITY, GAS, OR WATER.
3. MOVABLE EQUIPMENT WHICH IS STATIONED IN ONE PLACE FOR MORE THAN 8 HOURS AND HEAVIER THAN 400 POUNDS ARE REQUIRED TO BE ANCHORED WITH TEMPORARY ATTACHMENTS.

THE FOLLOWING MECHANICAL AND ELECTRICAL COMPONENTS SHALL BE POSITIVELY ATTACHED TO THE STRUCTURE, BUT THE ATTACHMENT NEED NOT BE DETAILED ON THE PLANS. THESE COMPONENTS SHALL HAVE FLEXIBLE CONNECTIONS PROVIDED BETWEEN THE COMPONENT AND ASSOCIATED DUCTWORK, PIPING, AND CONDUIT.

A. COMPONENTS WEIGHING LESS THAN 400 POUNDS AND HAVE A CENTER OF MASS LOCATED 4 FEET OR LESS ABOVE THE ADJACENT FLOOR OR ROOF LEVEL THAT DIRECTLY SUPPORT THE COMPONENT.
B. COMPONENTS WEIGHING LESS THAN 20 POUNDS, AND IN THE CASE OF DISTRIBUTED SYSTEMS, LESS THAN 5 POUNDS PER FOOT, WHICH ARE SUSPENDED FROM A ROOF OR FLOOR OR HUNG FROM A WALL.

FOR THOSE ELEMENTS THAT DO NOT REQUIRE DETAILS ON THE APPROVED DRAWINGS, THE INSTALLATION SHALL BE SUBJECT TO THE APPROVAL OF THE STRUCTURAL ENGINEER OF RECORD. THE PROJECT INSPECTOR WILL VERIFY THAT ALL COMPONENTS AND EQUIPMENT HAVE BEEN ANCHORED IN ACCORDANCE WITH ABOVE REQUIREMENTS.

PIPING, DUCTWORK, AND ELECTRICAL DISTRIBUTION SYSTEM BRACING NOTE:

PIPING, DUCTWORK, AND ELECTRICAL DISTRIBUTION SYSTEMS SHALL BE BRACED TO COMPLY WITH THE FORCES AND DISPLACEMENTS PRESCRIBED IN ASCE 7-10 SECTION 13.3 AS DEFINED IN ASCE 7-10 SECTION 13.6.8, 13.6.7, 13.6.5.6, AND 2022 CBC, SECTIONS 1616A.1.23, 1616A.1.24, 1616A.1.25 AND 1616A.1.26.

THE BRACING AND ATTACHMENTS TO THE STRUCTURE SHALL BE DETAILED ON THE APPROVED DRAWINGS.

COPIES OF THE BRACING SYSTEM INSTALLATION GUIDE OR MANUAL SHALL BE AVAILABLE ON THE JOBSITE PRIOR TO THE START OF HANGING AND BRACING OF THE PIPE, DUCTWORK, A/32ND ELECTRICAL DISTRIBUTION SYSTEMS.

THE STRUCTURAL ENGINEER OF RECORD SHALL VERIFY THE ADEQUACY OF THE STRUCTURE TO SUPPORT THE HANGER AND BRACE LOADS.

SCOPE OF WORK

SCOPE OF WORK INCLUDES PROVIDING SPLIT-SYSTEM HEATPUMP UNIT FOR THE COMMUNITY CENTER. WORK WILL ALSO INCLUDE PROVIDING EXHAUST FOR EQUIPMENT STORAGE AND ELECTRICAL ROOM.

APPROVAL

CITY APPROVED BY:
DIRECTOR OF PUBLIC WORKS DATE
CITY REVIEWED BY:
SENIOR ENGINEER DATE
SUBMITTED BY:
DATE

CLIENT
LANCASTER
Creating a better tomorrow. Together.
CITY OF LANCASTER
44933 FERN AVENUE
LANCASTER, CA 93534

PROJECT NAME
SAMARITAN'S PURSE PARK FORMERLY KNOWN AS EL DORADO PARK RENOVATION
PWCP NO. 24-008
44501 5th STREET EAST
LANCASTER, CA 93535

ENGINEER/ARCHITECT
IDS
IDS GROUP
1 PETERS CANYON ROAD, SUITE 130
IRVINE, CA. 92606
TEL: 949-387-8500, FAX: 949-387-0800

STAMP
REGISTERED PROFESSIONAL ENGINEER
DARREN B. SMITH
No. 30841
Exp. 12/31/24
MECHANICAL
STATE OF CALIFORNIA

ISSUE

REV.	DESCRIPTION	DATE
	30% CD SET	12/15/23
	60% CD SET	01/19/24
	90% CD SET	02/26/24
1	CLIENT REVISION	04/26/24
	COMPOSITE SET	9/24/25

PROJECT IDENTIFICATION

THIS DRAWING WAS CREATED IN AUTODESK AUTOCAD V. 2021 UNLESS OTHERWISE NOTED.

THE ORIGINAL SIZE OF THIS SHEET IS 30" X 42"

THESE DRAWINGS AND SPECIFICATIONS ARE THE PROPERTY AND COPYRIGHT OF IDS GROUP AND SHALL NOT BE USED ON ANY OTHER PROJECT OR LOCATIONS EXCEPT AS DESCRIBED ON THE DRAWINGS, WITHOUT THE WRITTEN AGREEMENT WITH IDS GROUP.

IDS PROJECT NO.	22X099.01
IDS DRAWN BY	SS
IDS CHECKED BY	KB
IDS APPROVED BY	DS

SHEET TITLE
MECHANICAL NOTES, LEGEND AND ABBREVIATIONS

SHEET NUMBER
M-001

SHEET NO. XXX OF XXX
CUMULATIVE SHEET NO. XXX OF XXX

PROGRESS SET - NOT FOR CONSTRUCTION

IDS GROUP - FILE LOCATION: S:\PROJECTS\2022\SHARED\22X099.01 LANC - EL DORADO PARK\17 VE SCOPE REDUCTION\CAD\MECH\22X09901_M-001_NOTES PLOT DATE: 4/26/2024 3:50:37 PM USER: SUHAIL.SHAHZAD

OUTDOOR DX CONDENSING UNIT (HEAT PUMP)

UNIT TAG	BASIS OF DESIGN MANUFACTURER AND MODEL NO.	NOMINAL TONS COOLING	MATCHED WITH INDOOR UNIT(S)	SERVING	LOCATION	ELECTRICAL			NOM. COOLING CAPACITY @ ARI CONDITIONS	NOM. HEATING CAPACITY @ 47°F DB	NOM. HEATING CAPACITY @ 17°F DB	SEER2	EER2	HSPF2	REFRIGERANT			DIMENSIONS H" x W" x D"	TOTAL OPER. WEIGHT (LBS.)	MOUNTING DETAIL	REMARKS:
						VOLTAGE/PH/HZ	MCA	MOCP							TYPE.	HOLDING CHARGE LBS	ADDITIONAL CHARGE LBS/FT				
CU 1	DAIKIN RZQ48TBVJUA	4 TONS	FC-1	DIRECTOR'S OFFICE 01, CRAFTS RM 03, STORAGE 02	GRADE	208-230 / 1 / 60	29.1	35	46,500	54,000	38,000	15.3	8.3	9.3	R-410A	7.9	0.04	53 X 36 X 13	225	10 M-501	1 2

REMARKS:

1. PROVIDE CONTROLS AND ACCESSORIES FOR LOW AMBIENT COOLING OPERATION, START ASSIST - CAPACITOR AND RELAY.
2. SIZE AND INSTALL REFRIGERANT PIPING STRICTLY PER MANUFACTURER'S INSTALLATION INSTRUCTIONS AND RECOMMENDATIONS. FIELD DETERMINE THE SHORTEST POSSIBLE ROUTING OF REFRIGERANT PIPING BETWEEN INDOOR AND OUTDOOR UNITS.

INDOOR DX FAN COIL UNIT (HEAT PUMP)

UNIT TAG	BASIS OF DESIGN MANUFACTURER AND MODEL NO.	NOMINAL CAPACITY (TONS)	TYPE	SERVING:	DESIGN AIRFLOW (CFM)	ESP " WG.	UNIT POWER			MIN. OSA CFM	DIMENSIONS H" x W" x D"	TOTAL OPER. WT. (LBS.)	SOUND DATA dBA	COUPLED CONDENSING UNIT	MOUNTING DETAIL	REMARKS
							VOLTAGE/PH/HZ	MCA	MOCP							
FC 1	DAIKIN FBQ48TBVJU	4 TONS	HORIZONTAL INDOOR DUCTED	DIRECTOR'S OFFICE 01, CRAFTS RM 03, STORAGE 02	1377	0.8	208-230 / 1 / 60	3.6	15	210	10 X 56 X 32	105	48	CU 1	14 M-501	1 2 3 4

REMARKS:

1. FULLY MODULATING ECONOMIZER MODEL ECONMQ48P-13-1K WITH MERV 13 FILTERS. PROVIDE 24 VAC POWER SUPPLY FOR ECONOMIZER.
2. PROVIDE TITLE 24 COMPLIANT PROGRAMMABLE THERMOSTAT.
3. PROVIDE APPROPRIATE CONDENSATE PUMP.
4. PROVIDE SECONDARY DRAIN PAN

FANS SCHEDULE

SYMBOL	MANUFACTURER & MODEL NO.	SERVING	DUTY	LOCATION	TYPE & ARRANGEMENT	DRIVE	CFM	E.S.P. IN. H2O	FAN RPM	FAN BHP	FAN MOTOR HP	VOLTAGE	SOUND RATING (SONES)	OPER. WT. (LBS.)	MOUNTING DETAIL	REMARKS:
EF 1	GREENHECK SP-A390-VG	EQUIPMENT STORAGE 08	GENERAL EXHAUST	CEILING	CENTRIFUGAL CEILING	DIRECT	250	0.62	1467	0.1	1/4	115V-1ø-60HZ	7.0	30	13 M-501	1
EF 2	GREENHECK SP-A390-VG	ELECT. EQUIPMENT 07	GENERAL EXHAUST	CEILING	CENTRIFUGAL CEILING	DIRECT	100	0.62	1339	0.04	1/8	115V-1ø-60HZ	5.5	30	13 M-501	2

REMARKS:

1. FURNISH WITH FACTORY GRILLE, BACKDRAFT DAMPER, MOUNTING BRACKETS, BUILT-IN DISCONNECT SWITCH, ELECTRONIC SPEED CONTROLLER. CONTROLLED BY WALL SWITCH. REFER TO ELECTRICAL DRAWINGS.
2. FURNISH WITH FACTORY GRILLE, BACKDRAFT DAMPER, MOUNTING BRACKETS, BUILT-IN DISCONNECT SWITCH, ELECTRONIC SPEED CONTROLLER. CONTROLLED BY LINE VOLTAGE 120 v / 1 PHASE THERMOSTAT BY ELECTRICAL DIVISION. SET THERMOSTAT AT 80 F (ADJUSTABLE). REFER TO ELECTRICAL DRAWINGS.

OSA INTAKE HOOD

SYMBOL	MFR. MODEL	TYPE	SERVICE	LOCATION	PERFORMANCE		PHYSICAL			MOUNTING DETAIL	REMARKS
					CFM	SP " WG	DIA. (IN.)	H (IN.)	WEIGHT INCL. CURB (LBS)		
GI 1	GREENHECK GRSI	GRAVITY INTAKE HOOD	OSA INTAKE FOR FC-1	ROOF	1600	0.04	39	36	60	5 M-501	1 2 3 4

REMARKS

1. ALUMINUM HOOD
2. COUNTER BALANCE BACKDRAFT DAMPER.
3. BIRD SCREEN
4. 12" HIGH FACTORY ROOF CURB

AIR DISTRIBUTION SCHEDULE (UNLESS OTHERWISE NOTED ON PLANS)

TAG	MANUFACTURER & MODEL NO.	DESCRIPTION	FRAME TYPE	REMARKS:
SG1	TITUS 300RS	DOUBLE DEFLECTION STEEL MATERIAL	SURFACE / DUCT	3/4" BLADE SPACING
RG1 / TG1	TITUS 350RL	SINGLE DEFLECTION STEEL MATERIAL	SURFACE / DUCT	3/4" BLADE SPACING 35 DEG DEFLECTION

LEGEND:

CD1	TAG	SG	SUPPLY GRILLE
150	CFM	RG	RETURN GRILLE
12x12	SIZE	TG	TRANSFER GRILLE

APPROVAL

CITY APPROVED BY:

DIRECTOR OF PUBLIC WORKS — DATE

CITY REVIEWED BY:

SENIOR ENGINEER — DATE

SUBMITTED BY:

DATE

CLIENT

LANCASTER

Creating a better tomorrow. Together.

CITY OF LANCASTER

44933 FERN AVENUE
LANCASTER, CA 93534

PROJECT NAME

SAMARITAN'S PURSE PARK FORMERLY KNOWN AS EL DORADO PARK RENOVATION

PWCP NO. 24-008

44501 5th STREET EAST
LANCASTER, CA 93535

ENGINEER/ARCHITECT

IDS

IDS GROUP

1 PETERS CANYON ROAD, SUITE 130
IRVINE, CA. 92606
TEL: 949-387-8500, FAX: 949-387-0800

STAMP

REGISTERED PROFESSIONAL ENGINEER — DARREN B. SMITH — No. 30844 — Exp. 12/31/24 — MECHANICAL — STATE OF CALIFORNIA

ISSUE

REV.	DESCRIPTION	DATE
	30% CD SET	12/15/23
	60% CD SET	01/19/24
	90% CD SET	02/26/24
1	CLIENT REVISION	04/26/24
	COMPOSITE SET	9/24/25

PROJECT IDENTIFICATION

THIS DRAWING WAS CREATED IN AUTODESK AUTOCAD V. 2021 UNLESS OTHERWISE NOTED.

THE ORIGINAL SIZE OF THIS SHEET IS 30" X 42"

THESE DRAWINGS AND SPECIFICATIONS ARE THE PROPERTY AND COPYRIGHT OF IDS GROUP AND SHALL NOT BE USED ON ANY OTHER PROJECT OR LOCATIONS EXCEPT AS DESCRIBED ON THE DRAWINGS, WITHOUT THE WRITTEN AGREEMENT WITH IDS GROUP.

IDS PROJECT NO.	22X099.01
IDS DRAWN BY	SS
IDS CHECKED BY	KB
IDS APPROVED BY	DS

SHEET TITLE

MECHANICAL SCHEDULES

SHEET NUMBER

M-002

SHEET NO. XXX OF XXX

CUMULATIVE SHEET NO. XXX OF XXX

PROGRESS SET - NOT FOR CONSTRUCTION

IDS GROUP - FILE LOCATION: S:\PROJECTS\2022\SHARED\22X099.01 LANC - EL DORADO PARK\17 VE SCOPE REDUCTION\CAD\MECH\22X09901_M-002_SCHED PLOT DATE: 4/26/2024 3:48:26 PM USER: SUHAIL.SHAHZAD

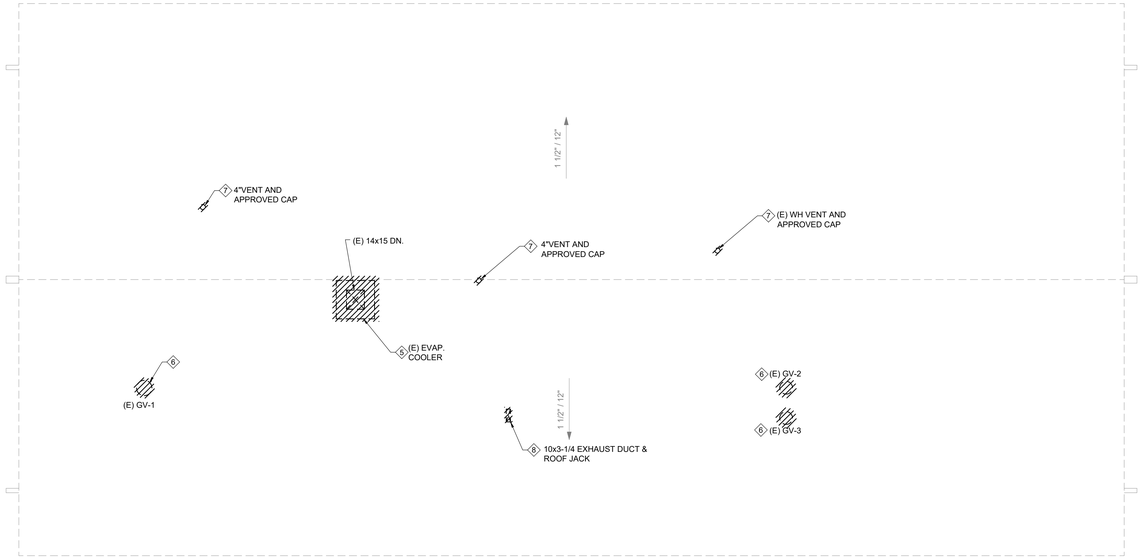

MECHANICAL DEMOLITION ROOF PLAN | 1/4" = 1'-0" | 2

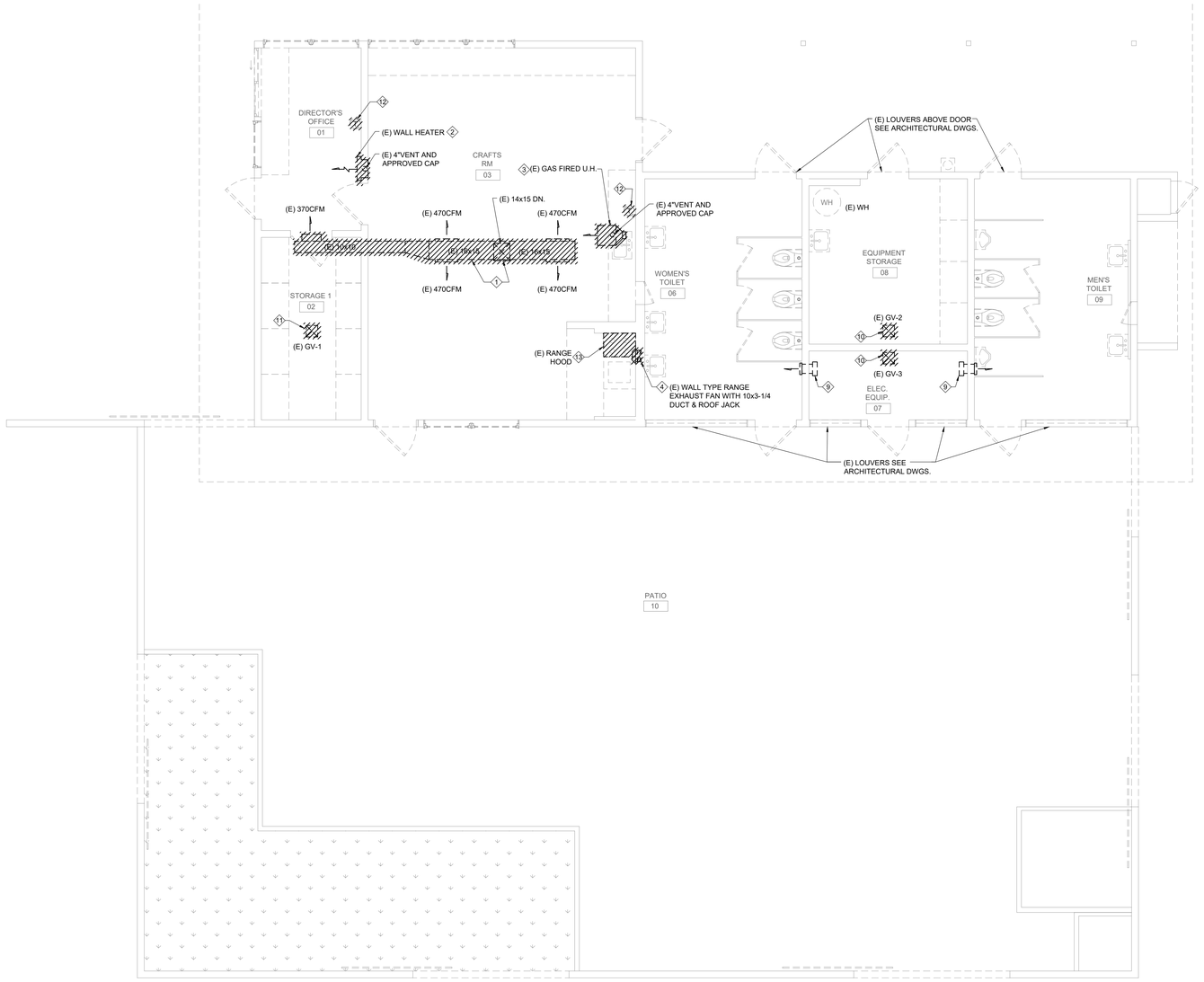

MECHANICAL DEMOLITION FLOOR PLAN | 1/4" = 1'-0" | 1

DEMOLITION KEYNOTES

1. DEMOLISH AND REMOVE EXISTING DUCTWORK, GRILLES AND ALL APPURTENANCES.
2. DEMOLISH AND REMOVE WALL HEATER AND ASSOCIATED VENT.
3. DEMOLISH AND REMOVE GAS FIRED UNIT HEATER AND ASSOCIATED VENT AND GAS PIPE.
4. DEMOLISH AND REMOVE WALL TYPE RANGE EXHAUST FAN AND DUCT UP THRU ROOF.
5. DEMOLISH AND REMOVE EXISTING ROOFTOP EVAP. COOLER, INCLUDING ALL APPURTENANCES.
6. DEMOLISH AND REMOVE EXISTING GRAVITY VENT.
7. DEMOLISH AND REMOVE EXISTING VENT AND ROOF CAP.
8. DEMOLISH EXISTING EXHAUST DUCT AND ROOF JACK.
9. EXISTING ELECTRIC HEATER, DUCTWORK AND GRILLE TO REMAIN AND RE-USED.
10. DEMOLISH AND REMOVE EXISTING GRILLE, DUCTWORK AND GRAVITY VENT. RE-USE (E) OPENING FOR NEW EXHAUST DUCT.
11. DEMOLISH AND REMOVE EXISTING GRILLE, DUCTWORK AND GRAVITY VENT. RE-USE (E) OPENING FOR NEW OSA DUCT.
12. DEMOLISH AND REMOVE EXISTING THERMOSTAT.
13. DEMOLISH AND REMOVE EXISTING RANGE HOOD AND ASSOCIATED DUCT WORK.

APPROVAL

CITY APPROVED BY:

DIRECTOR OF PUBLIC WORKS — DATE

CITY REVIEWED BY:

SENIOR ENGINEER — DATE

SUBMITTED BY:

DATE

CLIENT

LANCASTER
Creating a better tomorrow. Together.

CITY OF LANCASTER

44933 FERN AVENUE
LANCASTER, CA 93534

PROJECT NAME

SAMARITAN'S PURSE PARK FORMERLY KNOWN AS EL DORADO PARK RENOVATION

PWCP NO. 24-008

44501 5th STREET EAST
LANCASTER, CA 93535

ENGINEER/ARCHITECT

IDS

IDS GROUP

1 PETERS CANYON ROAD, SUITE 130
IRVINE, CA. 92606
TEL: 949-387-8500, FAX: 949-387-0800

STAMP

REGISTERED PROFESSIONAL ENGINEER
STEVEN B. SMITH
No. 30841
Exp. 12/31/24
MECHANICAL
STATE OF CALIFORNIA

ISSUE

REV.	DESCRIPTION	DATE
	30% CD SET	12/15/23
	60% CD SET	01/19/24
	90% CD SET	02/26/24
1	CLIENT REVISION	04/26/24
	COMPOSITE SET	9/24/25

PROJECT IDENTIFICATION

THIS DRAWING WAS CREATED IN AUTODESK AUTOCAD V. 2021 UNLESS OTHERWISE NOTED.

THE ORIGINAL SIZE OF THIS SHEET IS 30" X 42"

THESE DRAWINGS AND SPECIFICATIONS ARE THE PROPERTY AND COPYRIGHT OF IDS GROUP AND SHALL NOT BE USED ON ANY OTHER PROJECT OR LOCATIONS EXCEPT AS DESCRIBED ON THE DRAWINGS, WITHOUT THE WRITTEN AGREEMENT WITH IDS GROUP.

IDS PROJECT NO.	22X099.01
IDS DRAWN BY	SS
IDS CHECKED BY	KB
IDS APPROVED BY	DS

SHEET TITLE

MECHANICAL DEMOLITION FLOOR AND ROOF PLAN

SHEET NUMBER

M-111

SHEET NO. XXX OF XXX

CUMULATIVE SHEET NO. XXX OF XXX

PROGRESS SET - NOT FOR CONSTRUCTION

IDS GROUP - FILE LOCATION: S:\PROJECTS\2022\SHARED\22X099.01 LANC - EL DORADO PARK\17 VE SCOPE REDUCTION\CAD\MECH\22X09901_M-111_FPDEMO PLOT DATE: 4/26/2024 3:40:19 PM USER: DINH.THAI

MECHANICAL PROPOSED ROOF PLAN | 1/4" = 1'-0" | 2

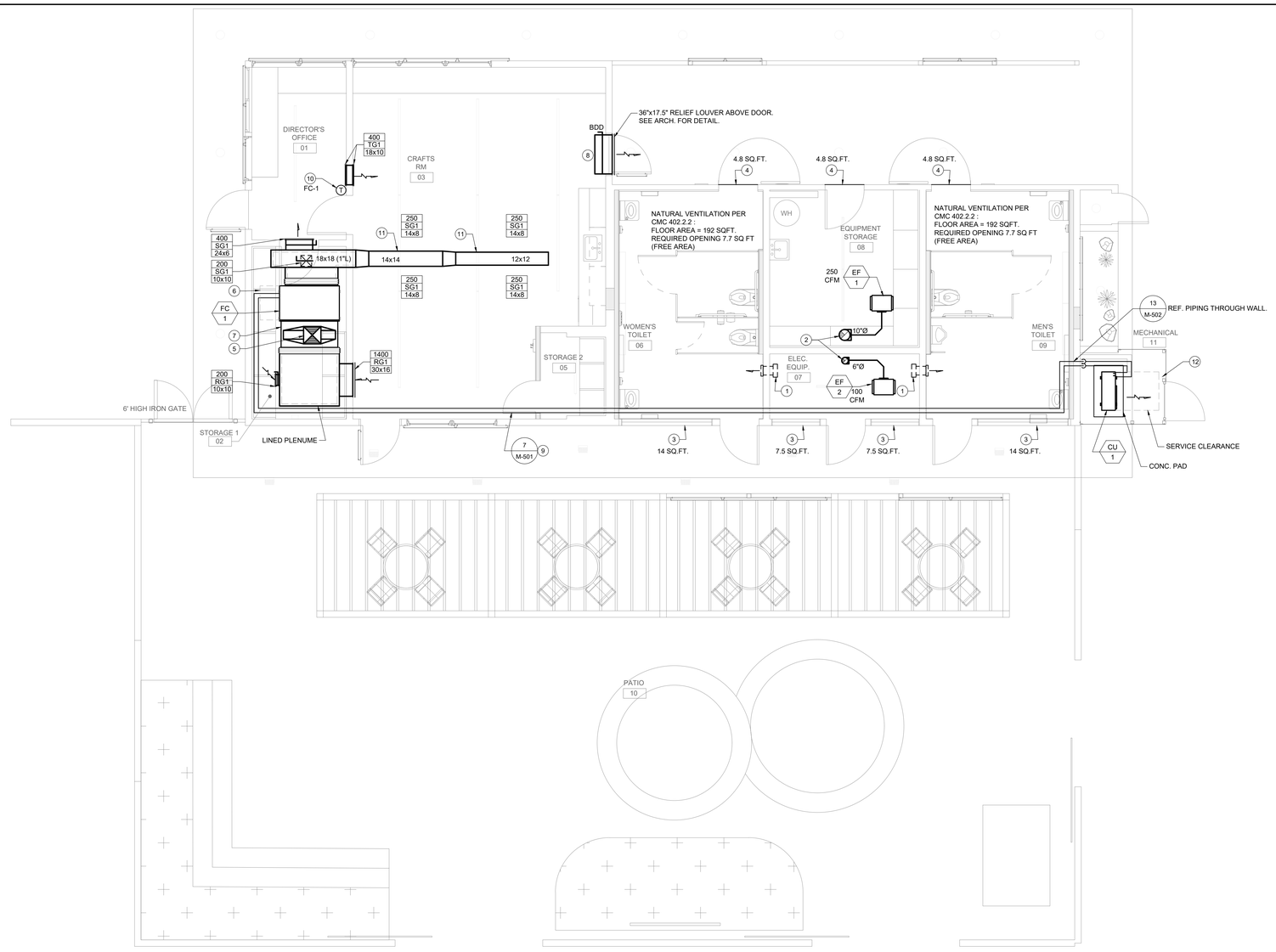

MECHANICAL PROPOSED FLOOR PLAN | 1/4" = 1'-0" | 1

KEYNOTES

1. EXISTING ELECTRIC HEATER, DUCTWORK AND GRILLE TO REMAIN AND RE-USED. CLEAN AND REFURBISH ELECTRIC HEATER.
2. EXHAUST DUCT UP THRU ROOF TO ROOF CAP. RE-USE (E) OPENING.
3. (N) LOUVERS. RE-USE (E) OPENING. SEE ARCHITECTURAL DWGS.
4. (N) LOUVERS ABOVE DOOR. RE-USE (E) OPENING. SEE ARCHITECTURAL DWGS.
5. 16"x16" OUTSIDE AIR DUCT UP THRU ROOF TO INTAKE HOOD. PROVIDE TRANSITION TO INTAKE HOOD. MODIFY AND RE-USE (E) OPENING. PROVIDE FLEXIBLE CONNECTION AT ECONOMIZER.
6. PROVIDE SERVICE CLEARANCE PER MANUFACTURER'S GUIDELINES.
7. FULLY MODULATING ECONOMIZER WITH MERV 13 FILTERS.
8. ±36"x17.5" RELIEF LOUVER WITH FABRIC TYPE BACKDRAFT DAMPER IN 10" DEEP PLENUM BOX WITH EGGCRATE GRILLE. SET AT ±0.15" W.G. PRESSURE DIFFERENTIAL. COORDINATE WITH ARCHITECT FOR EXACT SIZE AND LOCATION. PROVIDE LOUVER WITH MIN. 50% FREE AREA.
9. NEW REFRIGERANT PIPING.
10. NEW PROGRAMMABLE THERMOSTAT.
11. INSTALL DUCT ABOVE LIGHT FIXTURE. COORDINATE DUCT ELEVATION WITH ARCHITECT.
12. PERFORATED METAL ENCLOSURE. SEE ARCHITECTURAL DRAWINGS FOR REFERENCE.

APPROVAL

CITY APPROVED BY:
DIRECTOR OF PUBLIC WORKS DATE
CITY REVIEWED BY:
SENIOR ENGINEER DATE
SUBMITTED BY:
DATE

CLIENT

LANCASTER
Creating a better tomorrow. Together.

CITY OF LANCASTER
44933 FERN AVENUE
LANCASTER, CA 93534

PROJECT NAME

SAMARITAN'S PURSE PARK FORMERLY KNOWN AS EL DORADO PARK RENOVATION

PWCP NO. 24-008

44501 5th STREET EAST
LANCASTER, CA 93535

ENGINEER/ARCHITECT

IDS
IDS GROUP
1 PETERS CANYON ROAD, SUITE 130
IRVINE, CA. 92606
TEL: 949-387-8500, FAX: 949-387-0800

STAMP

REGISTERED PROFESSIONAL ENGINEER
DARREN B. SMITH
No. 30642
Exp. 12/31/24
MECHANICAL
STATE OF CALIFORNIA

ISSUE

REV.	DESCRIPTION	DATE
	30% CD SET	12/15/23
	60% CD SET	01/19/24
	90% CD SET	02/26/24
1	CLIENT REVISION	04/26/24
	COMPOSITE SET	9/24/25

PROJECT IDENTIFICATION

THIS DRAWING WAS CREATED IN AUTODESK AUTOCAD V. 2021 UNLESS OTHERWISE NOTED.

THE ORIGINAL SIZE OF THIS SHEET IS 30" X 42"

THESE DRAWINGS AND SPECIFICATIONS ARE THE PROPERTY AND COPYRIGHT OF IDS GROUP AND SHALL NOT BE USED ON ANY OTHER PROJECT OR LOCATIONS EXCEPT AS DESCRIBED ON THE DRAWINGS, WITHOUT THE WRITTEN AGREEMENT WITH IDS GROUP.

IDS PROJECT NO.	22X099.01
IDS DRAWN BY	SS
IDS CHECKED BY	KB
IDS APPROVED BY	DS

SHEET TITLE

MECHANICAL PROPOSED FLOOR AND ROOF PLAN

SHEET NUMBER

M-201

SHEET NO. XXX OF XXX

CUMULATIVE SHEET NO. XXX OF XXX

PROGRESS SET - NOT FOR CONSTRUCTION

IDS GROUP - FILE LOCATION: S:\PROJECTS\2022\SHARED\22X099.01 LANC - EL DORADO PARK\17 VE SCOPE REDUCTION\CAD\MECH\22X099.01_M-201_FP PLOT DATE: 4/26/2024 3:38:08 PM USER: DINH.THAI

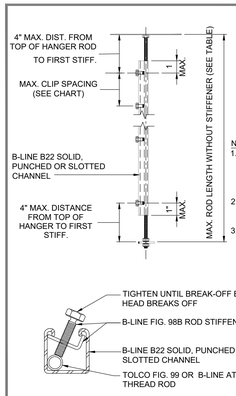

ROD SIZE	MAX. ROD LENGTH WITHOUT ROD STIFFENER	MAX. COMPRESSION FORCE WITHOUT STIFFENER	MAX. SPACING BETWEEN TOLCO FIG. 98	MAX. COMPRESSION FORCE WITH STIFFENER
3/8"	18"	410	13"	1246
1/2"	25"	730	18"	2105
5/8"	31"	1160	23"	3187
3/4"	37"	1690	28"	4493
7/8"	43"	2320	33"	6021

NOTES:
1. ROD STIFFENERS ARE REQUIRED ONLY ON VERTICAL STRUT COMPONENT OF THE SEISMIC BRACE SYSTEM ON HANGER AND TRAPEZE ASSEMBLIES THAT HAVE SEISMIC BRACING BRACING ATTACHED AT OR WITHIN 6" OF THE ROD. A MINIMUM OF TWO ROD STIFFENERS (TOLCO FIG. 98B) MUST BE INSTALLED.
2. DETAIL APPLIES TO ALL HUNG UTILITIES INCLUDING SINGLE HUNG UTILITIES, TRAPEZE HUNG UTILITIES, AND HUNG EQUIPMENT.
3. MATERIAL SPECIFICATIONS FOR TOLCO FIG. 98B, BODY: ASTM A-1011 CS TYPE B SAE; BREAK-OFF BOLT: 1035 (AISI-SAE) CASE HARDENED TO 0.015 MIN. DEPTH THRU HARDENED @ 45-55 RC FROM ANNEALED CONDITION.

TYP. THREADED ROD STIFFENER | NO SCALE | 16

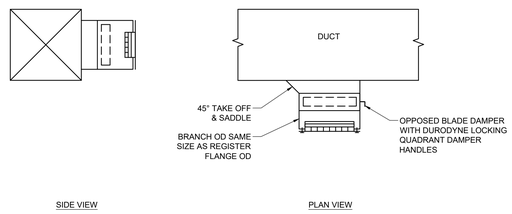

SUPPLY REGISTER DETAIL | NO SCALE | 12

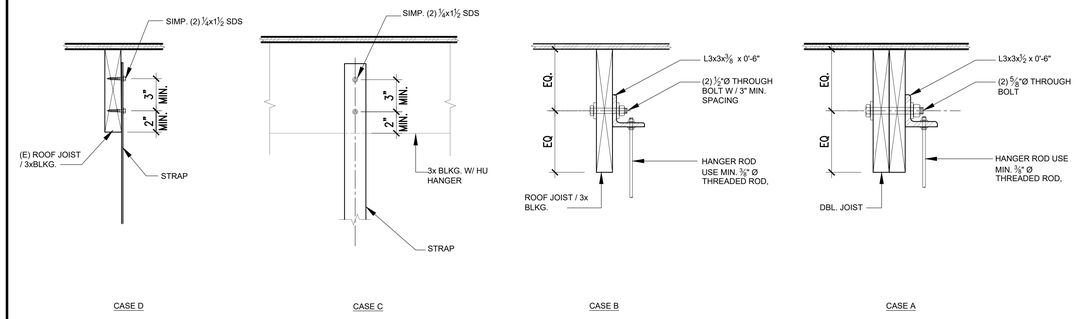

TYP. HANGER CONNECTION TO WOOD MEMBERS | NO SCALE | 4

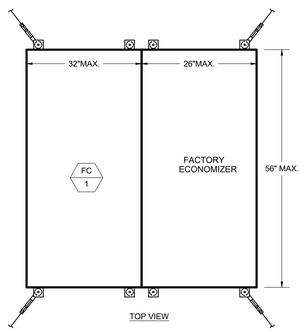

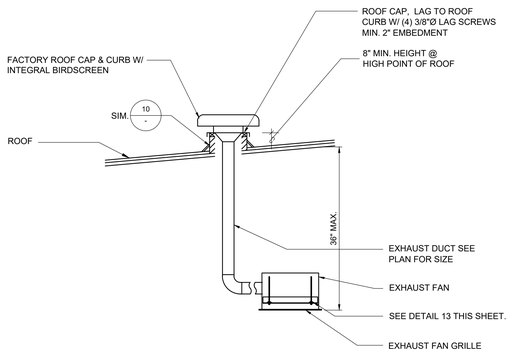

CEILING EXHAUST FAN ROOF CAP DETAIL | NO SCALE | 11

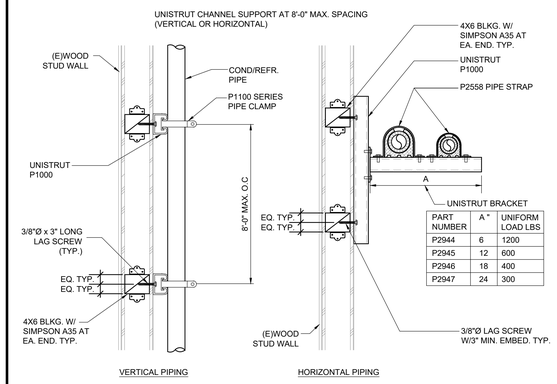

PART NUMBER	A "	UNIFORM LOAD LBS
P2944	6	1200
P2945	12	600
P2946	18	400
P2947	24	300

MAX WT. OF PIPES SUPPORTED BY UNISTRUT = 200 LBS.

CONDENSATE / REFRIGERANT PIPE SUPPORT ON WOOD STUD WALL | NO SCALE | 7

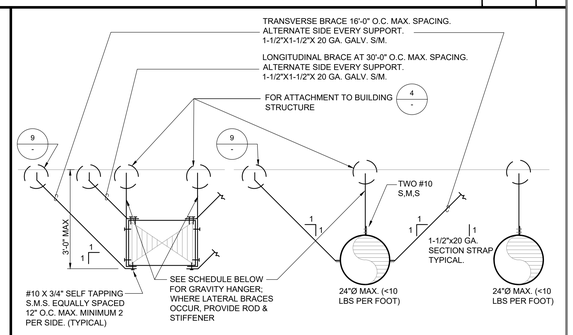

DUCT SIZE	HANGER SUPPORT MATERIAL	MAXIMUM DISTANCE
UP TO 24" DIAMETER SPIRAL ROUND	1" WIDE 20 GA. GI STRAP	8'-0" O.C.
18" MAX ONE SIDE / 12" MAX OTHER SIDE	1" WIDE 20 GA. GI STRAP	8'-0" O.C.
48" MAX ONE SIDE / 24" MAX OTHER SIDE	1" WIDE 20 GA. GI STRAP	8'-0" O.C.

DUCT HANGER - RECTANGULAR AND ROUND | N.T.S | 3

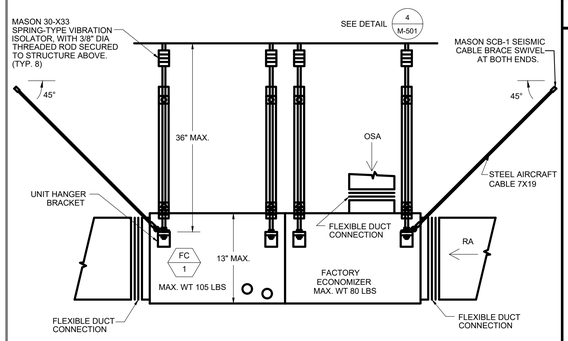

NOTES:
1. SECURE UNIT TO STRUCTURE USING FACTORY HANGER BRACKET PER MANUFACTURER'S INSTALLATION INSTRUCTIONS.
2. PROVIDE ROD STIFFENING STRUT PER DETAIL 16 / -
3. INSTALL PER MANUFACTURER'S GUIDELINES. ALLOW ACCESS TO FILTERS AND CONTROLS.

DUCTED DX FAN COIL UNIT WITH ECONOMIZER | NO SCALE | 14

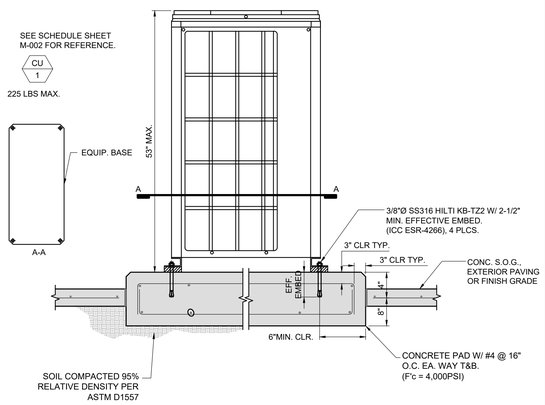

CONDENSING UNIT MOUNTING PAD DETAIL | NO SCALE | 10

NOT USED | NO SCALE | 6

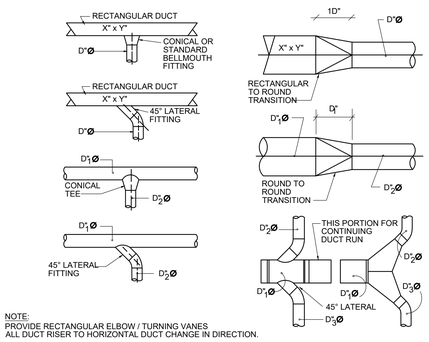

NOTE:
PROVIDE RECTANGULAR ELBOW / TURNING VANES
ALL DUCT RISER TO HORIZONTAL DUCT CHANGE IN DIRECTION.

DUCT TRANSITION REQUIREMENTS | NO SCALE | 2

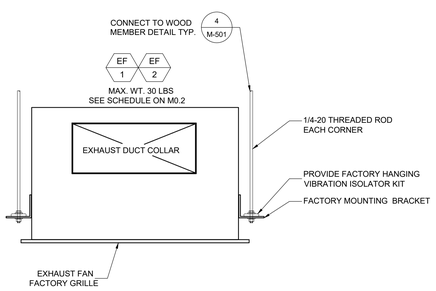

NOTES:
1. PROVIDE ROD STIFFENING STRUT PER DETAIL 16 / -

CEILING EXHAUST FAN MOUNTING | NO SCALE | 13

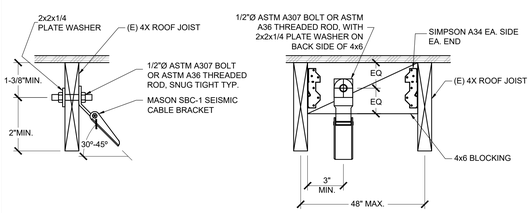

TYP. BRACE CONNECTION TO WOOD MEMBERS | NO SCALE | 9

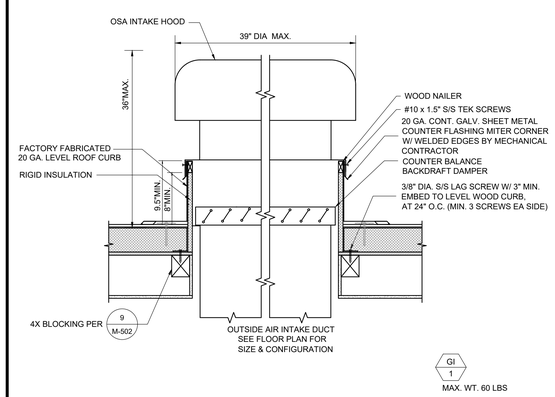

OUTSIDE AIR INTAKE HOOD | NO SCALE | 5

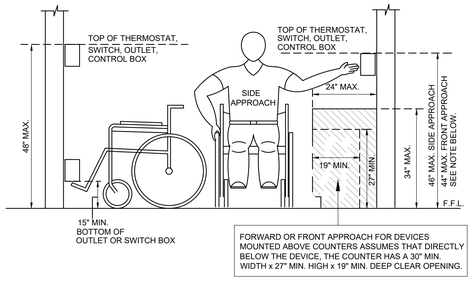

CONTROL DEVICE MOUNTING | NO SCALE | 1

APPROVAL

CITY APPROVED BY:
DIRECTOR OF PUBLIC WORKS — DATE
CITY REVIEWED BY:
SENIOR ENGINEER — DATE
SUBMITTED BY:
DATE

CLIENT
LANCASTER
Creating a better tomorrow. Together.
CITY OF LANCASTER
44933 FERN AVENUE
LANCASTER, CA 93534

PROJECT NAME
SAMARITAN'S PURSE PARK FORMERLY KNOWN AS EL DORADO PARK RENOVATION
PWCP NO. 24-008
44501 5th STREET EAST
LANCASTER, CA 93535

ENGINEER/ARCHITECT
IDS
IDS GROUP
1 PETERS CANYON ROAD, SUITE 130
IRVINE, CA. 92606
TEL: 949-387-8500, FAX: 949-387-0800

STAMP
REGISTERED PROFESSIONAL ENGINEER JARREN B. SMITH No. 30841 Exp. 12/31/24 CIVIL STATE OF CALIFORNIA

ISSUE

REV.	DESCRIPTION	DATE
	30% CD SET	12/15/23
	60% CD SET	01/19/24
	90% CD SET	02/26/24
1	CLIENT REVISION	04/26/24
	COMPOSITE SET	9/24/25

PROJECT IDENTIFICATION
THIS DRAWING WAS CREATED IN AUTODESK AUTOCAD V. 2021 UNLESS OTHERWISE NOTED.
THE ORIGINAL SIZE OF THIS SHEET IS 30" X 42"
THESE DRAWINGS AND SPECIFICATIONS ARE THE PROPERTY AND COPYRIGHT OF IDS GROUP AND SHALL NOT BE USED IN ANY OTHER PROJECT OR LOCATIONS EXCEPT AS DESCRIBED ON THE DRAWINGS, WITHOUT THE WRITTEN AGREEMENT WITH IDS GROUP.

IDS PROJECT NO.	22X099.01
IDS DRAWN BY	SS
IDS CHECKED BY	KB
IDS APPROVED BY	DS

SHEET TITLE
MECHANICAL DETAILS

SHEET NUMBER
M-501
SHEET NO. XXX OF XXX
CUMULATIVE SHEET NO. XXX OF XXX

PROGRESS SET - NOT FOR CONSTRUCTION

IDS GROUP - FILE LOCATION: S:\PROJECTS\2022\SHARED\22X099.01 LANC - EL DORADO PARK\17 VE SCOPE REDUCTION\CAD\MECH\22X09901_M-501_DETAIL PLOT DATE: 4/26/2024 3:36:11 PM USER: SUHAIL.SHAHZAD

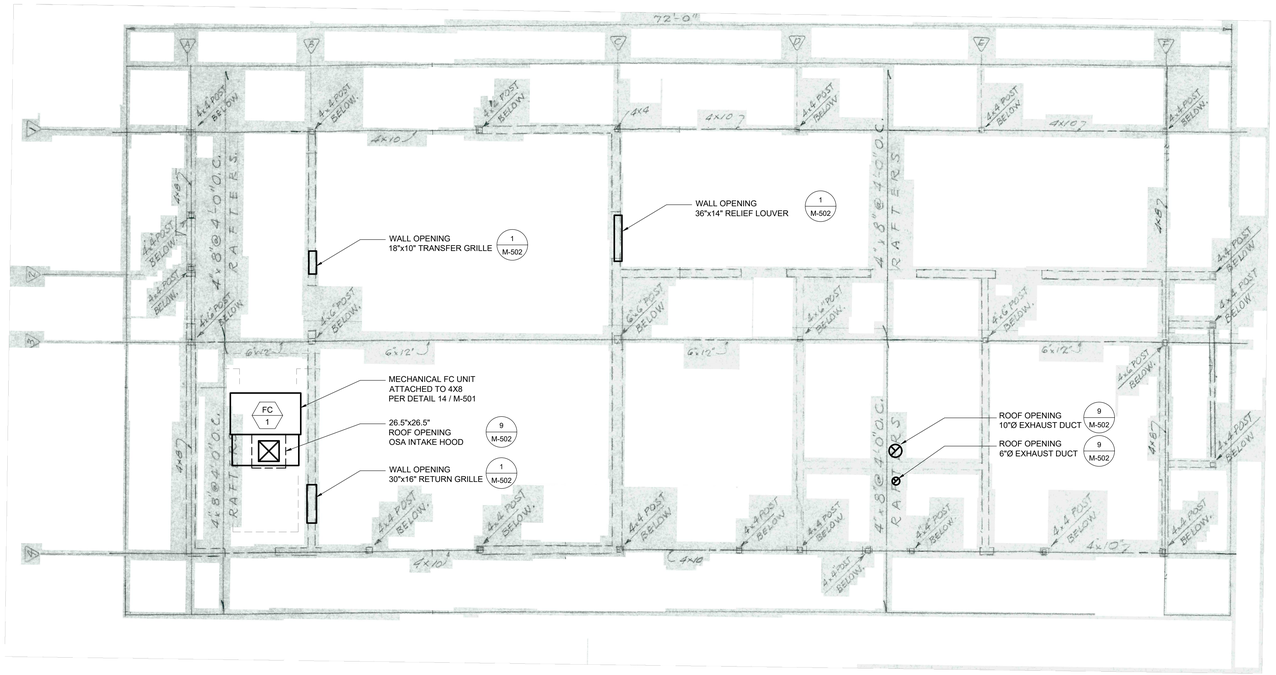

ROOF FRAMING PLAN | NO SCALE | 3

System No. W-L-8110

WL 8110

Classified by Underwriters Laboratories, Inc. to UL 1479 and CAN/ULC-S115

ANSI/UL1479 (ASTM E814)	CAN/ULC S115
F Ratings — 1 and 2 Hr (See Item 1)	F Ratings — 1 and 2 Hr (See Item 1)
T Rating — 0 Hr	FT Rating — 0 Hr
	FH Ratings — 1 and 2 Hr (See Item 1)
	FTH Rating — 0 Hr

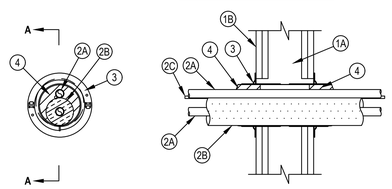

SECTION A-A

1. Wall Assembly — The 1 or 2 hr fire-rated gypsum board/stud wall assembly shall be constructed of the materials and in the manner described within the individual U300, U400, V400 or W400 Series Wall or Partition Designs in the UL Fire Resistance Directory and shall incorporate the following construction features:
   A. Studs — Wall framing shall consist of either wood studs or steel channel studs. Wood studs to consist of nom 2 by 4 in. (51 by 102 mm) lumber spaced max 16 in. (406 mm) OC. Steel studs to be min 3-1/2 in. (89 mm) wide and spaced max 24 in. (610 mm) OC.
   B. Gypsum Board* — Nom 5/8 in. (16 mm) thick gypsum board as specified in the individual Wall and Partition Design. Max diam of opening 5 in. (127 mm).
   The hourly F, FH Rating of the firestop system is dependent upon the hourly rating of the wall in which it is installed.
2. Air Conditioning (AC) Line Sets — AC line set consists of max two pipes or tubes (Item 2A), tubing insulation (Item 2B) and a thermostat cable (Item 2C). The AC line sets shall be rigidly supported on both sides of the wall assembly.
   A. Metallic Penetrants — A max of two pipes or tubes to be installed in each AC line set. The following types and sizes of through penetrants may be used:
      1. Steel Pipe — Nom 3/4 in. (19 mm) diam (or smaller) Schedule 5 (or heavier) steel pipe.
      2. Iron Pipe — Nom 3/4 in. (19 mm) diam (or smaller) cast or ductile iron pipe.
      3. Copper Pipe — Nom 3/4 in. (19 mm) diam (or smaller) Regular (or heavier) copper pipe.
      4. Copper Tube — Nom 3/4 in. (19 mm) diam (or smaller) Type L (or heavier) copper tube.
   B. Tube Insulation - Plasticsff — Nom 1 in. (25 mm) thick acrylonitrile butadiene/polyvinyl chloride (AB/PVC) flexible foam furnished in the form of tubing. The tube insulation may be installed on one max 3/4 in. (19 mm) diam pipe or tube in each AC line set. The space between the insulated and uninsulated pipes or tubes within each AC line set shall be 0 in. (point contact).
   See Plasticsff (QMFZ2) category in the Plastics Recognized Component Directory for names of manufacturers. Any Recognized Component tube insulation meeting the above specifications and having a UL 94 Flammability Classification of 94SVA may be used.
   C. Cable — One 4 pair No. 18 AWG (or smaller) thermostat cable with polyvinyl chloride (PVC) insulation and jacket materials may be installed with each AC line set.
3. Firestop Device* — Firestop device consists of a corrugated steel tube with flanges and gasketing material. Device slid into wall such that ends project an equal distance from the approximate centerline of the wall assembly. Device flanges are spun clockwise onto device threads, over gasketing material butting tightly to both sides of wall. The annular space between the device and the periphery of the opening shall be min 0 in. (point contact) to max 1 in. (25 mm).
   HILTI CONSTRUCTION CHEMICALS, DIV OF HILTI INC — CFS-SL SK 4" Firestop Sleeve
4. Fill, Void or Cavity Material* - Plug — Nom 4 in. (102 mm) plug sized for the firestop device (Item 3) friction fit within the sleeve flush with the end of the sleeve on both sides of the wall assembly. Plug cut to fit around the line set and installed tightly within the sleeve.
   HILTI CONSTRUCTION CHEMICALS, DIV OF HILTI INC — CFS-PL Firestop Plug

* Indicates such products shall bear the UL or cUL Certification Mark for jurisdictions employing the UL or cUL Certification (such as Canada), respectively.

Hilti Firestop Systems

Reproduced by HILTI, Inc. Courtesy of Underwriters Laboratories, Inc. September 11, 2017

FIRE STOPPING OF REFRIGERANT PIPES THRU FIRE RATED STUD WALL | NO SCALE | 13

NOT USED | NO SCALE | 10

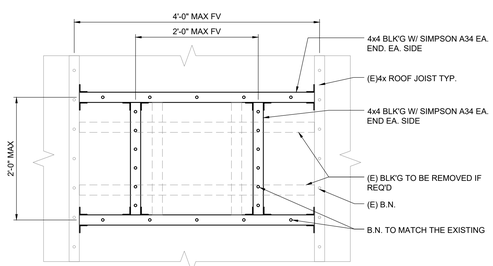

PLAN VIEW

ENLARGE EXISTING ROOF OPENING | NO SCALE | 9

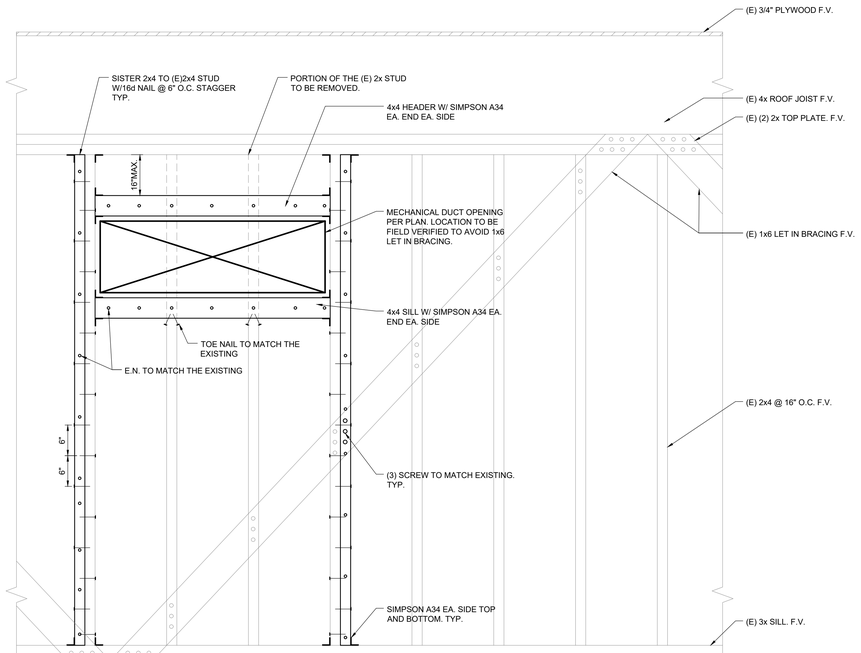

MEP DUCT WALL OPENING DETAIL | NO SCALE | 1

APPROVAL

CITY APPROVED BY:

DIRECTOR OF PUBLIC WORKS — DATE

CITY REVIEWED BY:

SENIOR ENGINEER — DATE

SUBMITTED BY:

DATE

CLIENT

LANCASTER

Creating a better tomorrow. Together.

CITY OF LANCASTER

44933 FERN AVENUE
LANCASTER, CA 93534

PROJECT NAME

SAMARITAN'S PURSE PARK FORMERLY KNOWN AS EL DORADO PARK RENOVATION

PWCP NO. 24-008

44501 5th STREET EAST
LANCASTER, CA 93535

ENGINEER/ARCHITECT

IDS

IDS GROUP

1 PETERS CANYON ROAD, SUITE 130
IRVINE, CA. 92606
TEL: 949-387-8500, FAX: 949-387-0800

STAMP

REGISTERED PROFESSIONAL ENGINEER
JARREN B. SMITH
No. 30841
Exp. 12/31/24
MECHANICAL
STATE OF CALIFORNIA

ISSUE

REV.	DESCRIPTION	DATE
	30% CD SET	12/15/23
	60% CD SET	01/19/24
	90% CD SET	02/26/24
1	CLIENT REVISION	04/26/24
	COMPOSITE SET	9/24/25

PROJECT IDENTIFICATION

THIS DRAWING WAS CREATED IN AUTODESK AUTOCAD V. 2021 UNLESS OTHERWISE NOTED.

THE ORIGINAL SIZE OF THIS SHEET IS 30" X 42"

THESE DRAWINGS AND SPECIFICATIONS ARE THE PROPERTY AND COPYRIGHT OF IDS GROUP AND SHALL NOT BE USED ON ANY OTHER PROJECT OR LOCATIONS EXCEPT AS DESCRIBED ON THE DRAWINGS, WITHOUT THE WRITTEN AGREEMENT WITH IDS GROUP.

IDS PROJECT NO.	22X099.01
IDS DRAWN BY	SS
IDS CHECKED BY	KB
IDS APPROVED BY	DS

SHEET TITLE

MECHANICAL DETAILS

SHEET NUMBER

M-502

SHEET NO. XXX OF XXX

CUMULATIVE SHEET NO. XXX OF XXX

PROGRESS SET - NOT FOR CONSTRUCTION

IDS GROUP - FILE LOCATION: S:\PROJECTS\2022\SHARED\22X099.01 LANC - EL DORADO PARK\17 VE SCOPE REDUCTION\CAD\MECH\22X09901_M-502_DETAIL PLOT DATE: 4/26/2024 3:33:24 PM USER: SUHAIL.SHAHZAD

IDS GROUP - FILE LOCATION: S:\PROJECTS\2022\SHARED\22X099.01 LANC - EL DORADO PARK\17 VE SCOPE REDUCTION\CAD\MECH\22X09901_M-601_TITLE 24 PLOT DATE: 4/26/2024 3:51:34 PM USER: SUHAIL.SHAHZAD

This document is used to demonstrate compliance for mechanical systems that are within the scope of the permit application and are demonstrating compliance using the prescriptive path outlined in 140.4, or 141.0(b)2 for alterations.

Project Name: El Dorado Park Renovation		**Report Page:**	**(Page 1 of 11)**
Project Address:	44501 5th St E	**Date Prepared:**	2/2/2024

A. GENERAL INFORMATION

01	Project Location (city)	Lancaster	04	Total Conditioned Floor Area	672
02	Climate Zone	14	05	Total Unconditioned Floor Area	0
03	Occupancy Types Within Project:		06	# of Stories (Habitable Above Grade)	1

- Office

B. PROJECT SCOPE

This table Includes mechanical systems or components that are within the scope of the permit application and are demonstrating compliance using the prescriptive path outlined in 140.4, 170.2(b) or 141.0(b)2 and 180.2(b)2 for alterations.

01	02	03
Air System(s)	Wet System Components	Dry System Components
☒ Heating Air System	☐ Water Economizer	☒ Air Economizer
☒ Cooling Air System	☐ Pumps	☐ Electric Resistance Heat
Mechanical Controls	☐ System Piping	☒ Fan Systems
☒ Mechanical Controls (existing to remain, altered or new)	☐ Cooling Towers	☒ Ductwork (existing to remain, altered or new)
	☐ Chillers	☒ Ventilation
	☐ Boilers	☐ Zonal Systems/ Terminal Boxes

C. COMPLIANCE RESULTS

Table C will indicate if the project data input into the compliance document is compliant with mechanical requirements. This table is not editable by the user. If this table says "DOES NOT COMPLY" or "COMPLIES with Exceptional Conditions" refer to Table D., or the table indicated as not compliant for guidance.

01		02		03		04		05		06		07		08	09
System Summary 110.1, 110.2, 140.4, 170.2(c)	AND	Pumps 140.4(k), 170.2(c)4I	AND	Fans/ Economizers 140.4(c), 140.4(e), 170.2(c)	AND	System Controls 110.2, 120.2, 140.4(f), 170.2(c)	AND	Ventilation 120.1, 160.2	AND	Terminal Box Controls 140.4(d), 170.2(c)4B	AND	Distribution 120.3, 140.4(l), 160.2, 160.3	AND	Cooling Towers 110.2(e)2	Compliance Results
(See Table F)		(See Table G)		(See Table H)		(See Table I)		(See Table J)		(See Table K)		(See Table L)		(See Table M)	
Yes	AND		AND	Yes	AND	Yes	AND	Yes	AND		AND	Yes	AND		COMPLIES
Mandatory Measures Compliance (See Table Q for Details)															COMPLIES

D. EXCEPTIONAL CONDITIONS

This table is auto-filled with uneditable comments because of selections made or data entered in tables throughout the form.

E. ADDITIONAL REMARKS

This table includes remarks made by the permit applicant to the Authority Having Jurisdiction.

F. HVAC SYSTEM SUMMARY (DRY & WET SYSTEMS)

Space Conditioning System Information

01	02	03	04	05	06
System Name	Quantity	System Serving	System Status	Space Type	Utilizing Recovered Heat
FC-1/CU-1	1	Single zone	New/ Addition		☐

F. HVAC SYSTEM SUMMARY (DRY & WET SYSTEMS)

Dry System Equipment Sizing (includes air conditioners, condensers, heat pumps, VRF, furnaces and unit heaters and DOAS systems)

01	02	03	04	05	06	07	08	09	10	11
Name or Item Tag	Equipment Category per Tables 110.2, 140.4(a)2 and 170.2(c)3aii	Equipment Type per Tables 110.2 and Title 20	Smallest Size Available[1] 140.4(a) and 170.2(c)1	Equipment Sizing per Mechanical Schedule (kBtu/h) 140.4(a&b), 170.2(c)1 & 170.2(c)2						
				Heating Output[2,3]			Cooling Output[2,3]		Load Calculations[3,4]	
				Per Design (kBtu/h)	Rated (kBtu/h)	Supp. Heating Output (kBtu/h)	Sensible Per Design (kBtu/h)	Rated (kBtu/h)	Total Heating Load (kBtu/h)	Total Sensible Cooling Load (kBtu/h)
FC-1/CU-1	Unitary Heat Pumps	Air-cooled, split (1phase)	NA: Load Controls	21.77	54	0	42.05	46.5	52.16	48.38

[1] *FOOTNOTES: Equipment shall be the smallest size, within the available options of the desired equipment line, necessary to meet the design heating and cooling loads of the building per 140.4(a) and 170.2(c)1. Healthcare facilities are excepted.*
[2] *It is common practice to show rated output capacity on the equipment schedule. Sensible cooling output comes from specification sheet tables.*
[3] *If equipment is heating only, leave cooling output and load blank. If equipment is cooling only, leave heating output and load blank.*
[4] *Authority Having Jurisdiction may ask for load calculations used for compliance per 140.4(b) and 170.2(c).*

Dry System Equipment Efficiency (other than Package Terminal Air Conditioners (PTAC) and Package Terminal Heat Pumps (PTHP), DX-DOAS and Dual Fuel Heat Pumps)

01	02	03	04	05	06	07	08	09
Name or Item Tag	Size Category (Btu/h)	Heating Mode				Cooling Mode		
		Rating Condition (°F)	Efficiency Unit	Minimum Efficiency Required per Tables 110.2 / Title 20	Design Efficiency	Efficiency Unit	Minimum Efficiency Required per Tables 110.2 / Title 20	Design Efficiency
FC-1/CU-1	<65,000		HSPF2	7.5	9.3	SEER2	14.3	15.3

G. PUMPS

This section does not apply to this project.

H. FAN SYSTEMS & AIR ECONOMIZERS

This table is used to demonstrate compliance with prescriptive requirements found in 140.4(c), 140.4(e), 140.4(m), 170.2(c)3, and 170.2(c)4A for fan systems. Fan systems serving only process loads are exempt from these requirements and do not need to be included in Table H.

System Name	FC-1/CU-1	Quantity	1	Fan System Status	New	System Zoning	all other systems	Serving Dwelling Units	Not Serving Dwelling Units	Fan System Airflow (cfm)	1,377	Site Elevation	2,340	Economizer	Differential Temperature

01	02	03	04	05	06	07	08	09	10	11
Fan Name or Item Tag	Fan Type	Qty	Component	Airflow through Component (%)	Water Gauge (w.g)	Allowance: Component Allowance	Allowance: Fan Allowance (watt/cfm)[3]	Design: Design Electrical Input Power Method	Design: Motor Nameplate Horsepower	Design: Design Electrical Input Power (kW)
SF	Supply	1	Base Allowance for system serving spaces <=6 floors away	1,377		319		Manufacturer provided		0.45
			MERV 13-16 Filter upstream of thermal conditioning equipment	1,377		191				
			Hydronic/DX cooling coil or heat pump coil	1,377		191				
			Economizer Return Damper	1,377		63				
Supply Fan Base Allowance (kW)			Exhaust/Return/Relief/Transfer Fan Base Allowance(kW)			Fan System Allowance (kW)[3]		1	Fan System Electrical Output (kW)	0.45

[1] *FOOTNOTES: Fans serving spaces with design background noise goals below NC35*
[2] *Low-turndown single-zone VAV fan system must be capable of and configured to reduce airflow to 50 percent of design airflow and use no more than 30 percent of the design wattage at that airflow. No more than 10 percent of the design load served by the equipment shall have fixed loads.*
[3] *Fan system allowance includes fan system base allowance.*
[4] *Filter pressure loss can only be counted once per fan system.*
[5] *Complex Fan System means a fan system that combines a single cabinet fan system with other supply fans, exhaust fans, or both.*
[6] *Computer room economizers must meet requirements of 140.9(a) and will be documented on the NRCC-PRC-E document..*

H. EXHAUST AIR HEAT RECOVERY 140.4(q), 170.2(c)4O

01	02	03	04	05	06	07	08	09	10	11
Fan System Name	Qty	Hours of Operation per Year	Design Supply Airflow Rate	Outdoor Airflow	% Outdoor Air at Full Design Airflow	Exemptions to Exhaust Air Heat Recovery Requirement per 140.4(q) & 170.2(c)4O	Exhaust Air Heat Recovery 140.4(q) & 170.2(c)4O	Type Of Heat Recovery Rating	Required Recovery Ratio	Energy Recovery Bypass

Fan Energy Index (FEI)

01	02	03
Name or Item Tag	FEI Exception	FEI
FC-1/CU-1	Altered Fan System	

I. SYSTEM CONTROLS

This table is used to demonstrate compliance with mandatory controls in 110.2 and 120.2 and prescriptive controls in 140.4(f) and (n), 170.2(c)4D 170.2(c)4L or requirements in 141.0(b)2E 180.2(b)2 for altered space conditioning systems.

01	02	03	04	05	06	07	08	09
System Name	System Zoning	Conditioned Floor Area Being Served (ft^2)	Thermostats 110.2(b) & (c)[1], 120.2(a) 160.3(a)2A or 141.0(b)2E & 180.2(b)2	Shut-Off Controls 120.2(e) & 160.3(a)2D	Isolation Zone Controls 120.2(g) & 160.3(a)2F	Demand Response 110.12 120.2(b) & 160.3(a)2B	Supply Air Temp. Reset 140.4(f) & 170.2(c)4D	Window Interlocks per 140.4(n) & 170.2(c)4D
FC-1/CU-1	Single zone	<= 25,000 ft^2	Setback	Auto Timer Switch	4 Hour Timer	EMCS	Included	NA: HRR dwelling unit

[1] *FOOTNOTES: Gravity gas wall heaters, gravity floor heaters, gravity room heaters, non-central electric heaters, fireplaces or decorative gas appliances, wood stoves are not required to have setback thermostats.*

J. VENTILATION AND INDOOR AIR QUALITY

This table is used to demonstrate compliance with mandatory ventilation requirements in 120.1 120.2(e)3B 140.4(p) and 140.4(q) for all nonresidential and hotel/motel and d:t24refnolink/]160.2, 160.3(a)3D, 170.2(a)4N, 170.2(a)4O for high-rise residential occupancies. For alterations, only ventilation systems being altered within the scope of the permit application need to be documented in this table. In lieu of this table, the required outdoor ventilation rates and airflows may be shown on the plans or the calculations can be presented in a spreadsheet.

01	☐	Check the box if the project is showing ventilation calculations on the plans, or attaching the calculations instead of completing this table.
02	☒	Check this box if the project included Nonresidential, Hotel/Motel Spaces or Multifamily Common Use Spaces
	☐	
03	☐	Check the box if the project is using natural ventilation in any nonresidential or hotel/motel spaces to meet required ventilation rates per 120.1(c)2.

Nonresidential and Hotel/ Motel Multifamily Common Use Ventilation Systems

04		05		06		07
System Name	FC-1/CU-1	System Design OA CFM Airflow[1]	210	System Design Transfer Air CFM	0	Air Filtration per 120.1(c) 141.0(b)2 and 160.2(c)21[2]: Provided

08	09	10	11	12	13	14	15	16	
Space Name or Item Tag	Mechanical Ventilation Required per 120.1(c)3[3] & 160.2(c)3					Exh. Vent per 120.1(c)4 & 160.2(c)4		DCV or Sensor Controls per 120.1(d)3, 120.1(d)5, and 120.1(e)3[6] 160.2(c)5D 160.2(c)5E 160.2(c)5D	
	Occupancy Type[4]	Conditioned Floor Area (ft^2)	# of Shower heads/ toilets	# of people[5]	Required Min OA CFM	Required Min CFM	Provided per Design CFM		
Zone 1	Office space	672			100.8	0	0	DCV	NA: Not required per §120.1(d)3
								Occ Sensor	NA: Not required space type
17	Total System Required Min OA CFM				101	18	Ventilation for this System Complies?		Yes

[1] *FOOTNOTES: System CFM should include both mechanical and natural ventilation for the zone/system*
[2] *Air filtration requirements apply to the following three system types per 120.1(c)1A: space conditioning systems utilizing ducts to supply air to occupiable space; supply-only ventilation systems providing outside air to occupiable space; supply side of balanced ventilation systems including heat recovery and energy recovery ventilation systems providing outside air to occupiable space.*
[3] *Uniform Mechanical Code may have more stringent ventilation requirements; the most stringent code requirement takes precedence.*
[4] *See Standards Tables 120.1-A and 120.1-B.*

J. VENTILATION AND INDOOR AIR QUALITY

[5] *For lecture halls with fixed seating, the expected number of occupants shall be determined in accordance with the California Building Code.*
[6] *120.2(e)3 requires systems serving rooms that are required by 130.1(c) to have lighting occupancy sensing controls to also have occupancy sensing zone controls for ventilation. Examples of spaces which require lighting occupancy sensors include offices 250ft² or smaller, multipurpose rooms less than 1,000 ft², classrooms, conference rooms, restrooms, aisles and open areas in warehouses, library book stack aisles, corridors, stairwells, parking garages, and loading and unloading zones, unless excepted by 130.1(c).*

K. TERMINAL BOX CONTROLS

This section does not apply to this project.

L. DISTRIBUTION (DUCTWORK and PIPING)

This table is used to show compliance with mandatory pipe insulation requirements found in 120.3 and mandatory requirements found in 120.4(g) for duct sealing.

01	☐	Insulation shall be protected from damage, including that due to sunlight, moisture, equipment maintenance, and wind. Insulation exposed to weather shall be installed with a cover suitable for outdoor service. Insulation covering chilled water piping and refrigerant suction piping located outside the conditioned space shall have a Class I or Class II vapor retarder. All penetrations and joints of which shall be sealed.

Duct Leakage Testing

The answers to the questions below apply to the following duct systems:	FC-1/CU-1	**NR/ Common Use:** Duct leakage testing shall not exceed 6% per NA7.5.3 required for these systems?	No

L. DISTRIBUTION (DUCTWORK and PIPING)

		Dwelling Units: Total duct leakage of duct system shall not exceed 12% or duct system to outside shall not exceed 6% per RA3.1.4 required for systems?	No
		Duct leakage testing per CMC Section 603.10.1 required for these systems?	Yes
11	No	The scope of the project includes only duct systems serving healthcare facilities	
12	Yes	Duct system provides conditioned air to an occupiable space for a constant volume, single zone, space-conditioning system.	
13	Yes	The space conditioning system serves less than 5,000 ft^2 of conditioned floor area.	
14	No	The combined surface area of the ducts is more than 25% of the total surface area of the entire duct system:	
15		The scope of the project includes extending an existing duct system, which is constructed, insulated or sealed with asbestos.	
16	No	The scope of the project includes an existing duct system that is documented to have been previously sealed as confirmed through field verification and diagnostic testing in accordance with procedures in the Reference Nonresidential Appendix NA2.	
17		All Ductwork and plenums with pressure class ratings shall be constructed to Seal Class A	
18		All ductwork is an extension of an existing duct system	
19		Ductwork serving individual dwelling unit	
20		< 25 ft of new or replacement space conditioning ducts installed	
21	R-8	Duct Insulation R-value	
22			
23			

M. COOLING TOWERS

This section does not apply to this project.

N. DECLARATION OF REQUIRED CERTIFICATES OF INSTALLATION

Selections have been made based on information provided in previous tables of this document. If any selection needs to be changed, please explain why in Table E Additional Remarks. These documents must be provided to the building inspector during construction and can be found online at https://www.energy.ca.gov/title24/2019standards/2019_compliance_documents/Nonresidential_Documents/NRCI/

Form/Title
NRCI-MCH-01-E - Must be submitted for all buildings

O. DECLARATION OF REQUIRED CERTIFICATES OF ACCEPTANCE

Selections have been made based on information provided in previous tables of this document. If any selection needs to be changed, please explain why in Table E Additional Remarks. These documents must be provided to the building inspector during construction and can be found online at https://www.energy.ca.gov/title24/2019standards/2019_compliance_documents/Nonresidential_Documents/NRCA/

Form/Title	Systems/Spaces To Be Field Verified
NRCA-MCH-02-A - Outdoor Air must be submitted for all newly installed HVAC units. Note: MCH-02-A can be performed in conjunction with MCH-07-A Supply Fan VFD Acceptance (if applicable) since testing activities overlap.	RZQ48TBVJUA;
NRCA-MCH-03-A - Constant Volume Single Zone HVAC NOTE: This form does not automatically move to "Yes'. If Constant Volume Single Zone HVAC Systems are included in the scope, permit applicant should move this form to "Yes".	RZQ48TBVJUA;
NRCA-MCH-05-A - Air Economizer Controls	RZQ48TBVJUA;
NRCA-MCH-11-A Automatic Demand Shed Controls	RZQ48TBVJUA;
NRCA-MCH-12-A FDD for Packaged Direct Expansion Units	RZQ48TBVJUA;
NRCA-MCH-18-A Energy Management Control Systems	RZQ48TBVJUA;

P. DECLARATION OF REQUIRED CERTIFICATES OF VERIFICATION

There are no NRCV forms required for this project.

Q. MANDATORY MEASURES DOCUMENTATION LOCATION

This table is used to indicate where mandatory measures are documented in the plan set or construction documentation.

01		02
Compliance with Mandatory Measures documented through MCH Mandatory Measures Note Block	Yes	Plan sheet or construction document location: M-Sheets

APPROVAL

CITY APPROVED BY:
DIRECTOR OF PUBLIC WORKS DATE
CITY REVIEWED BY:
SENIOR ENGINEER DATE
SUBMITTED BY:
DATE

CLIENT

LANCASTER
Creating a better tomorrow. Together.

CITY OF LANCASTER
44933 FERN AVENUE
LANCASTER, CA 93534

PROJECT NAME

SAMARITAN'S PURSE PARK FORMERLY KNOWN AS EL DORADO PARK RENOVATION

PWCP NO. 24-008

44501 5th STREET EAST
LANCASTER, CA 93535

ENGINEER/ARCHITECT

IDS GROUP
1 PETERS CANYON ROAD, SUITE 130
IRVINE, CA. 92606
TEL: 949-387-8500, FAX: 949-387-0800

STAMP

ISSUE

REV.	DESCRIPTION	DATE
	30% CD SET	12/15/23
	60% CD SET	01/19/24
	90% CD SET	02/26/24
1	CLIENT REVISION	04/26/24
	COMPOSITE SET	9/24/25

PROJECT IDENTIFICATION

THIS DRAWING WAS CREATED IN AUTODESK AUTOCAD V. 2021 UNLESS OTHERWISE NOTED.

THE ORIGINAL SIZE OF THIS SHEET IS 30" X 42"

THESE DRAWINGS AND SPECIFICATIONS ARE THE PROPERTY AND COPYRIGHT OF IDS GROUP AND SHALL NOT BE USED ON ANY OTHER PROJECT OR LOCATIONS EXCEPT AS DESCRIBED ON THE DRAWINGS, WITHOUT THE WRITTEN AGREEMENT WITH IDS GROUP.

IDS PROJECT NO.	22X099.01
IDS DRAWN BY	SS
IDS CHECKED BY	KB
IDS APPROVED BY	DS

SHEET TITLE

TITLE 24 DOCUMENTATION

SHEET NUMBER

M-601

SHEET NO. XXX OF XXX

CUMULATIVE SHEET NO. XXX OF XXX

PROGRESS SET - NOT FOR CONSTRUCTION

REGULATORY NOTES

AREA SEPARATION

LOCATION AND RATING OF WALLS, ARE IDENTIFIED ON ARCHITECTURAL FLOOR PLANS.

PIPING

A. WHERE PIPING PENETRATES THE AREA SEPARATION WALL, FLOOR OR ROOF SURFACE THE SECTION PASSING THROUGH THE WALL SHALL BE ONLY OF METAL..

B. PENETRATIONS OF RATED ASSEMBLIES SHALL INCLUDE UL THROUGH- PENETRATION FIRE STOP DEVICES AND OR FIRE STOP SYSTEM.

C. FIRE STOPPING DEVICES AND MATERIALS SHALL BE APPLIED PER MANUFACTURERS WRITTEN INSTALLATION INSTRUCTIONS AND SECTION 078413 OF THE PROJECT SPECIFICATIONS.

D. FIRE RATING SHALL BE EQUAL TO AREA SEPARATION RATING. MANDATORY CONSERVATION MEASURES

PLUMBING FIXTURES

E. LAVATORY, SINK FITTINGS SHALL BE LISTED AS "APPROVED" BY THE CALIFORNIA ENERGY COMMISSION.

1. FITTINGS AND SHOWER HEADS SHALL INCLUDE INTEGRAL FLOW RESTRICTING DEVICES TO LIMIT FLOW AS FOLLOWS:
   a. FITTINGS - 2.0 GPM MAXIMUM.

C. FAUCETS SHALL BE 0.35 GPM (USING AERATORS).

D. FIXTURE CONNECTIONS TO THE AREA SEPARATION WALL SURFACES OR THE SECTION PASSING THROUGH THE WALL SHALL ONLY BE OF METAL.

PIPING INSULATION

A. INSULATING MATERIAL AND COVERING ON PIPE AND TUBING SHALL BE INSTALLED IN COMPLIANCE WITH THE FLAME- SPREAD RATING NOT TO EXCEED 25 AND A SMOKE DENSITY RATING NOT TO EXCEED 450 WHEN TESTED IN ACCORDANCE WITH CBC STANDARD 8-1.

B. INSULATION, INSULATION JACKET, ADHESIVES, TAPES, ETC. SHALL BE APPLIED PER MANUFACTURERS WRITTEN INSTALLATION INSTRUCTIONS.

D. HOT WATER PIPING SHALL BE INSULATED TO A MINIMUM THERMAL RESISTANCE VALUE OF R-6 OR GREATER. SEE SPECIFICATIONS FOR REQUIREMENTS.

ENERGY CONSERVATION

A. DOMESTIC HOT WATER PIPING SHALL BE INSULATED CONSISTENT WITH THE REQUIREMENTS OF THE CALIFORNIA ENERGY COMMISSION - ENERGY EFFICIENCY STANDARDS SECTIONS 118 AND 123.

B. SERVICE WATER HEATING SYSTEMS AND EQUIPMENT SHALL COMPLY WITH ENERGY EFFICIENCY STANDARDS, SECTION 113.

GENERAL NOTES

1. THESE DRAWINGS SHALL BE READ IN CONJUNCTION WITH AND BE CONSIDERED A PART OF SEPARATE AND COMPLETE PLUMBING SPECIFICATIONS.
2. BEFORE COMMENCEMENT OF WORK, THE CONTRACTOR SHALL VERIFY THE ELEVATIONS, CHARACTERISTICS OF UTILITIES PIPING, AND EXACT ROUGH-IN LOCATIONS OF MECHANICAL EQUIPMENT AND EQUIPMENT PROVIDED BY OTHER TRADES IN FIELD AND SHALL IMMEDIATELY NOTIFY THE ARCHITECT OF ANY DISCREPANCIES OR PROBLEMS IN WRITING.
3. IN NO CASE SHALL DIMENSIONS BE SCALED FROM THE PLANS, SECTION, ELEVATIONS OR DETAILS ON THE PLUMBING DRAWINGS.
4. EXACT LOCATIONS AND MOUNTING HEIGHTS OF PLUMBING FIXTURES SHALL BE OBTAINED FROM THE ARCHITECTURAL DRAWINGS.
5. MECHANICAL CONTRACTOR SHALL WARRANTY THE ENTIRE PLUMBING IMPROVEMENT FOR ONE (1) YEAR. THE WARRANTY SHALL BE IMPLEMENTED UPON SUBSTANTIAL COMPLETION AND SHALL INCLUDE LABOR AND MATERIALS. NO ADDITIONAL COST WILL BE GRANTED TO CONTRACTOR RELATED TO BREAKDOWN, AND/OR WATER LEAKAGE OF THE PLUMBING SYSTEM OR REPLACING NON-OPERATIONAL MATERIAL/PARTS DURING THE WARRANTY PERIOD.
6. TRAPS FOR ALL LAVATORIES AND SINKS SHALL TRAP STRAIGHT BACK TO WALL WITH OFFSETS HAPPENING WITHIN THE WALL.
7. PLUMBING WORK SHALL BE INSTALLED SO AS TO AVOID INTERFERENCE WITH ELECTRICAL AND MECHANICAL EQUIPMENT AND STRUCTURAL FRAMING.
8. CLEANOUTS SHALL BE INSTALLED WHERE EASILY ACCESSIBLE. THE CONTRACTOR SHALL COORDINATE ALL CLEANOUT LOCATIONS WITH ALL EQUIPMENT, CABINETS, ETC., AND THE ARCHITECT PRIOR TO ANY INSTALLATION. CLEANOUTS SHALL BE INSTALLED
   1. ABOVE EACH URINAL.
   2. ABOVE EACH LAVATORY.
   3. IN WALLS. AVOID FLOOR CLEANOUT.
9. PLUMBING FIXTURE VENTS TO TERMINATE A MIN. OF 12 INCHES FROM ANY VERTICAL SURFACE AND 10 FEET FROM ANY OUTSIDE AIR INTAKES.
10. VALVES, UNIONS, ETC. SHALL BE SAME SIZE AS PIPE UNLESS INDICATED OTHERWISE ON DRAWINGS.
11. UNIONS SHALL BE PROVIDED AND INSTALLED AFTER EACH VALVE AND PRIOR TO ALL EQUIPMENT CONNECTIONS.
12. WORK SHALL BE PERFORMED AND MATERIALS SHALL BE INSTALLED IN COMPLIANCE WITH THE APPLICABLE CODES AS ADOPTED AND AMENDED BY THE AUTHORITY HAVING JURISDICTION. NOTHING IN THESE DRAWINGS SHALL BE CONSTRUED TO PERMIT WORK NOT CONFORMING TO THESE CODES OR OTHERS APPLICABLE TO THIS PROJECT.
13. CONNECTIONS TO SITE PIPING SHALL BE COMPLETED BY THE PLUMBING CONTRACTOR.
14. SOIL, WASTE AND VENT PIPING SHALL SLOPE AT 2% UNLESS OTHERWISE INDICATED ON THE PLANS.
15. VALVES, TRAP PRIMERS, WATER HAMMER ARRESTERS OR OTHER EQUIPMENT SHOWN IN WALLS OR ABOVE NON-ACCESSIBLE CEILINGS SHALL BE INSTALLED BEHIND AN ACCESS PANEL.
16. PLUMBING FIXTURES AND EQUIPMENT SHALL BE CERTIFIED BY THE CALIFORNIA STATE ENERGY COMMISSION TO COMPLY WITH EFFICIENCY STANDARDS PER SECTION 2-5314(A) OF THE TITLE-24 REGULATIONS.
17. PIPING THROUGH FIRE RATED WALLS AS IDENTIFIED ON ARCHITECTURAL FLOOR PLANS SHALL BE PER U.L. FIRE RESISTANCE SYSTEM NO. W-L-1001.
18. EXISTING PIPING DAMAGED DURING EXCAVATION SHALL BE REPAIRED WITH MATERIALS TO MATCH EXISTING BY THE CONTRACTOR.
19. COORDINATE EXACT LOCATION OF SITE PIPING INDICATED WITH ALL OTHER ON SITE PIPING AND EQUIPMENT BY CIVIL AND ELECTRICAL.
20. EXTEND WATER, SEWER AND STORM DRAIN SYSTEMS TO A POINT OF CONNECTION 5'-0" OUTSIDE OF BUILDING AND CONNECT AT THE INVERT ELEVATION SHOWN ON THE CIVIL DRAWINGS. PIPING BEYOND THIS POINT SHALL BE PER CIVIL DRAWINGS.
21. UNDERGROUND METAL PIPE LOCATED EITHER INSIDE OR OUTSIDE OF BUILDING SHALL BE ENCASED WITHIN A MINIMUM 10 MIL POLYETHYLENE PLASTIC SLEEVE SEALED WATER TIGHT WITH POLYVINYL CHLORIDE TAPE.
22. POINTS OF CONNECTION SHALL BE COORDINATED WITH THE GENERAL CONTRACTOR PRIOR TO BID.
23. CONNECTIONS TO EXISTING SERVICES SHALL BE MADE SUCH THAT INTERRUPTION TIME WILL BE AS SHORT AS POSSIBLE. THE CONTRACTOR SHALL GIVE THE OWNER'S REPRESENTATIVE SUFFICIENT NOTICE OF SUCH INTERRUPTION AND THE ACTUAL SHUT DOWN TIME SHALL BE AT A TIME DESIGNATED BY THE OWNER'S REPRESENTATIVE.
24. HORIZONTAL PIPING LINES EXTENDED AND CONNECTED TO EQUIPMENT SHALL BE RUN AT THE HIGHEST POSSIBLE ELEVATIONS AND NOT LESS THAN 6" ABOVE THE FLOOR TO PROVIDE CLEARANCE FOR CLEANING. AT WALL OR COLUMN LOCATIONS, PIPING ROUGH-IN SHALL BE STUBBED IN WALLS WHENEVER POSSIBLE.
25. CUTTING BORING, SAWCUTTING OR DRILLING THROUGH THE NEW OR EXISTING STRUCTURAL ELEMENTS ALLOWED ONLY WHEN SO DETAILED IN THE DRAWINGS OR ACCEPTED BY THE ARCHITECT AND STRUCTURAL ENGINEER WITH THE APPROVAL OF COH REPRESENTATIVE. CUTTING OF EXISTING PAVINGS, WALKS AND/OR FLOORS SHALL BE BY MACHINE SAW CUTTING. FOR HOLES IN CONCRETE WALLS OR FLOORS UTILIZE CORE DRILLING EQUIPMENT.
26. ABOVE GROUND PIPING SYSTEMS SHALL BE LABELED IN ACCORDANCE WITH ASME A13.1.
27. CAP AND ABANDON EXISTING WASTE PIPING BELOW FLOOR EXCEPT WHERE INDICATED TO BE REUSED. ROUTER AND CLEAN EXISTING WASTE PIPING SHALL BE REUSED.
28. PLUMBING WORK INDICATED AS "DEMO" SHALL BE REMOVED. DO NOT ABANDON IN PLACE. REMOVE DEAD LEGS BACK TO MAINS. DO NOT LEAVE STAGNANT PIPE SECTIONS IN PLACE.
29. THE CONTRACTOR SHALL VERIFY THE EXACT DEPTH AND LOCATION OF EXISTING DRAINAGE SYSTEM LATERALS PRIOR TO INSTALLATION OF ANY PIPING BY USING POTHOLING GROUND PENETRATING RADAR.

LEGEND

SYMBOL	ABBREVIATION	DESCRIPTION
	S OR W	SOIL OR WASTE (ABOVE GRADE)
	S OR W	SOIL OR WASTE (BELOW GRADE)
	(E)W	EXISTING SOIL OR WASTE
	V	SANITARY VENT
CD	CD	CONDENSATE DRAIN
	CW	COLD WATER
ICW	ICW	INDUSTRIAL COLD WATER
	HW	HOT WATER
IHW	IHW	INDUSTRIAL HOT WATER
HWR	HWR	HOT WATER RETURN
G	G	GAS (LOW PRESSURE)
	DOWN	DOWN PIPING
	UP	UP PIPING
(E) G	(E) G	EXISTING GAS
(E) CW	(E) CW	EXISTING COLD WATER
(E) HW	(E) HW	EXISTING HOT WATER
(E) HWR	(E) HWR	EXISTING HOT WATER RETURN
(E) CD	(E) CD	EXISTING CONDENSATE DRAIN
(E) V	(E) V	EXISTING VENT
(E) W	(E) W	EXISTING WASTE
	FCO	FLOOR CLEANOUT
	WCO	WALL CLEANOUT
	SOV IN YB	SHUT-OFF VALVE IN YARD BOX
	SOV	SHUT-OFF VALVE
	SOV	SHUT-OFF VALVE
	CV	CHECK VALVE
	GC	GAS COCK
	TPRV	TEMPERATURE PRESSURE RELIEF VALVE
	TP	TRAP PRIMER
	POC	POINT OF CONNECTION
	POD	POINT OF DISCONNECTION
	ABV	ABOVE
	AP	ACCESS PANEL
	BEL	BELOW
	CONN	CONNECTION
	CFH	CUBIC FEET PER HOUR
	CLG	CEILING
	(D)	DEMOLITION
	DF	DRINKING FOUNTAIN
	FLR	FLOOR
	FD	FLOOR DRAIN
	GPM	GALLON PER MINUTE
	HB	HOSE BIBB
	MEP	MECHANICAL ELECTRICAL PLUMBING
	RPBP	REDUCED PRESSURE BACKFLOW PREVENTOR
	TD	TRENCH DRAIN
	VTR	VENT THRU ROOF
	WH	WATER HAMMER
	W/	WITH

PLUMBING SHEET INDEX

S.No.	SHEET NUMBER	SHEET TITLE	SCALE
1	P-001	NOTES, LEGEND AND ABBREVIATIONS	NO SCALE
2	P-002	PLUMBING SCHEDULES	NO SCALE
3	P-101	SITE PLAN	1" = 40'-0"
4	P-111	PLUMBING DEMOLITION FLOOR PLAN	1/8" = 1'-0"
5	P-211	PLUMBING PROPOSED FLOOR PLAN	1/8" = 1'-0"
6	P-301	PUMP HOUSE & TRASH ENCLOSURE PLUMBING FLOOR PLAN	1/2" = 1'-0"
7	P-501	PLUMBING DETAILS	NO SCALE

SCOPE OF WORK

- DEMOLITION AND REMOVAL OF RESTROOM FIXTURES IN THE PUBLIC RESTROOM.
- DEMOLITION AND REMOVAL OF EXISTING CW & HW PIPING AND SEWER PIPING TO POINT OF DISCONNECT (POD).
- INSTALL NEW RESTROOM FIXTURES IN THE COMMUNITY CENTER.
- INSTALL NEW CW & HW PIPING AND SEWER PIPING FROM POINT OF DISCONNET (POD).
- INSTALL NEW FLOOR DRAIN AT THE TRASH ENCLOSURE.
- INSTALL NEW PLUMBING FIXTURES IN THE PUMP HOUSE.

APPLICABLE CODES AND STANDARD

2022 CALIFORNIA BUILDING STANDARDS ADMINISTRATIVE CODE, PART 1, CBSC
2022 CALIFORNIA BUILDING CODE (CBC), PART 2, CBSC
2022 CALIFORNIA ELECTRICAL CODE (CEC), PART 3, CBSC
2022 CALIFORNIA MECHANICAL CODE (CMC), PART 4, CBSC
2022 CALIFORNIA PLUMBING CODE (CPC), PART 5, CBSC
2022 CALIFORNIA ENERGY CODE, PART 6, CBSC
2022 CALIFORNIA HISTORICAL BUILDING CODE, PART 8, CBSC
2022 CALIFORNIA FIRE CODE, PART 9, CBSC
2022 CALIFORNIA REFERENCED STANDARDS, PART 12, CBSC

PARTIAL LIST OF APPLICABLE NFPA STANDARDS

NFPA 13, AUTOMATIC SPRINKLER SYSTEMS, 2019 EDITION
NFPA 99, HEALTHCARE FACILITIES CODE, 2021 EDITION
NFPA 51, DESIGN AND INSTALLATION OF OXYGEN-FUEL GAS SYSTEMS FOR WELDING, CUTTING, AND ALLIED PROCESSES. 2019 EDITION

(NOTE: SEE UL STANDARD 1971 FOR "VISUAL DEVICES")
REFERENCE CODE SECTION FOR NFPA STANDARDS - CBC
(SFM) CHAPTER 35.
ASME A17.1-2019
ASME A18.1-2014

EQUIPMENT ANCHORAGE & SEISMIC NOTES

MEP COMPONENT ANCHORAGE NOTE:

MECHANICAL, PLUMBING, AND ELECTRICAL COMPONENTS SHALL BE ANCHORED AND INSTALLED PER THE DETAILS ON THE APPROVED CONSTRUCTION DOCUMENTS. WHERE NO DETAIL IS INDICATED, THE FOLLOWING COMPONENTS SHALL BE ANCHORED AND/OR BRACED TO MEET THE FORCE AND DISPLACEMENT REQUIREMENTS PRESCRIBED IN THE 2021 CBC, SECTIONS 1616A.1.18 THROUGH 1616A.1.26 AND ASCE 7-10 CHAPTER 13, 26 AND 30.

1. PERMANENT EQUIPMENT AND COMPONENTS.
2. TEMPORARY OR MOVABLE EQUIPMENT THAT IS PERMANENTLY ATTACHED (e.g. HARDWIRED) TO THE BUILDING UTILITY SERVICES SUCH AS ELECTRICITY, GAS, OR WATER.
3. MOVABLE EQUIPMENT WHICH IS STATIONED IN ONE PLACE FOR MORE THAN 8 HOURS AND HEAVIER THAN 400 POUNDS ARE REQUIRED TO BE ANCHORED WITH TEMPORARY ATTACHMENTS.

THE FOLLOWING MECHANICAL AND ELECTRICAL COMPONENTS SHALL BE POSITIVELY ATTACHED TO THE STRUCTURE, BUT THE ATTACHMENT NEED NOT BE DETAILED ON THE PLANS. THESE COMPONENTS SHALL HAVE FLEXIBLE CONNECTIONS PROVIDED BETWEEN THE COMPONENT AND ASSOCIATED DUCTWORK, PIPING, AND CONDUIT.

A. COMPONENTS WEIGHING LESS THAN 400 POUNDS AND HAVE A CENTER OF MASS LOCATED 4 FEET OR LESS ABOVE THE ADJACENT FLOOR OR ROOF LEVEL THAT DIRECTLY SUPPORT THE COMPONENT.
B. COMPONENTS WEIGHING LESS THAN 20 POUNDS, AND IN THE CASE OF DISTRIBUTED SYSTEMS, LESS THAN 5 POUNDS PER FOOT, WHICH ARE SUSPENDED FROM A ROOF OR FLOOR OR HUNG FROM A WALL.

FOR THOSE ELEMENTS THAT DO NOT REQUIRE DETAILS ON THE APPROVED DRAWINGS, THE INSTALLATION SHALL BE SUBJECT TO THE APPROVAL OF THE STRUCTURAL ENGINEER OF RECORD. THE PROJECT INSPECTOR WILL VERIFY THAT ALL COMPONENTS AND EQUIPMENT HAVE BEEN ANCHORED IN ACCORDANCE WITH ABOVE REQUIREMENTS.

PIPING, DUCTWORK, AND ELECTRICAL DISTRIBUTION SYSTEM BRACING NOTE:

PIPING, DUCTWORK, AND ELECTRICAL DISTRIBUTION SYSTEMS SHALL BE BRACED TO COMPLY WITH THE FORCES AND DISPLACEMENTS PRESCRIBED IN ASCE 7-10 SECTION 13.3 AS DEFINED IN ASCE 7-10 SECTION 13.6.8, 13.6.7, 13.6.5.6, AND 2021 CBC, SECTIONS 1616A.1.23, 1616A.1.24, 1616A.1.25 AND 1616A.1.26.

THE BRACING AND ATTACHMENTS TO THE STRUCTURE SHALL BE DETAILED ON THE APPROVED DRAWINGS.

COPIES OF THE BRACING SYSTEM INSTALLATION GUIDE OR MANUAL SHALL BE AVAILABLE ON THE JOBSITE PRIOR TO THE START OF HANGING AND BRACING OF THE PIPE, DUCTWORK, A/32ND ELECTRICAL DISTRIBUTION SYSTEMS.

THE STRUCTURAL ENGINEER OF RECORD SHALL VERIFY THE ADEQUACY OF THE STRUCTURE TO SUPPORT THE HANGER AND BRACE LOADS.

APPROVAL

CITY APPROVED BY:
DIRECTOR OF PUBLIC WORKS DATE
CITY REVIEWED BY:
SENIOR ENGINEER DATE
SUBMITTED BY:
DATE

CLIENT

LANCASTER
Creating a better tomorrow. Together.
CITY OF LANCASTER
44933 FERN AVENUE
LANCASTER, CA 93534

PROJECT NAME

SAMARITAN'S PURSE PARK FORMERLY KNOWN AS EL DORADO PARK RENOVATION

PWCP NO. 24-008

44501 5th STREET EAST
LANCASTER, CA 93535

ENGINEER/ARCHITECT

IDS
IDS GROUP
1 PETERS CANYON ROAD, SUITE 130
IRVINE, CA. 92606
TEL: 949-387-8500, FAX: 949-387-0800

STAMP

REGISTERED PROFESSIONAL ENGINEER
DARREN B. SMITH
No. 30841
Exp. 12/31/24
CHANICAL
STATE OF CALIFORNIA

ISSUE

REV.	DESCRIPTION	DATE
	30% CD SET	12/15/23
	60% CD SET	01/19/24
	90% CD SET	02/26/24
1	CLIENT REVISION	04/26/24
	COMPOSITE SET	9/24/25

PROJECT IDENTIFICATION

THIS DRAWING WAS CREATED IN AUTODESK AUTOCAD V. 2021 UNLESS OTHERWISE NOTED.

THE ORIGINAL SIZE OF THIS SHEET IS 30" X 42"

THESE DRAWINGS AND SPECIFICATIONS ARE THE PROPERTY AND COPYRIGHT OF IDS GROUP AND SHALL NOT BE USED ON ANY OTHER PROJECT OR LOCATIONS EXCEPT AS DESCRIBED ON THE DRAWINGS, WITHOUT THE WRITTEN AGREEMENT WITH IDS GROUP.

IDS PROJECT NO.	22X099.01
IDS DRAWN BY	ML
IDS CHECKED BY	DS
IDS APPROVED BY	DS

SHEET TITLE

NOTES, LEGEND AND ABBREVIATIONS

SHEET NUMBER

P-001

SHEET NO. 001 OF 007

CUMULATIVE SHEET NO. XXX OF XXX

PROGRESS SET - NOT FOR CONSTRUCTION

IDS GROUP - FILE LOCATION: S:\PROJECTS\2022\SHARED\22X099.01 LANC - EL DORADO PARK\17.VE SCOPE REDUCTION\CAD\PLUMB\22X09901_P-001_NOTES PLOT DATE: 4/26/2024 3:23:37 PM USER: MIKE.LIN

FIXTURE UNITS

BUILDING

NUMBER	TYPE OF FIXTURE	CW FU PER FIXTURE	TOTAL CW FU UNITS	SOIL/WASTE FU PER FIXTURE	TOTAL SOIL/WASTE FU UNITS
5	WATER CLOSET	--	105	4	20
4	LAVATORY	1	4	1	4
1	URINAL	--	15	2	2
2	FLOOR SINK / DRAIN	--	--	2	4
-	HOSE BIBB	1	--	--	--
4	DRINKING FOUNTAIN (1)	1	4	--	--
1	KITCHEN SINK	2	2	2	2
1	MOP/SERVICE SINK	2	2	2	2
TOTAL FIXTURE UNITS			133		34

NOTES:
(1) LANDSCAPE DRINKING FOUNTAINS ARE NOT PART OF BUILDING FIXTURE COUNT.

HOT WATER CALCULATION

BUILDING

TYPE OF FIXTURE	AVERAGE GALLON OF HOT WATER PER USAGE	(X)	TIME USED DURING 1 HOUR	(=)	TOTAL GALLON USED IN 1 HOUR
PUBLIC SINK, INDOOR	--	X	--		--
KITCHEN SINK	20	X	1		20
SERVICE SINK	20	X	1		20
TOTAL PEAK HOUR DEMAND		X			40
GPH REQUIRED (80%)					32

NOTES:
(1) 32 GPH REQUIRED X (120-60) DELTA T X 11 = 21,120 BTU INPUT OF WATER HEATER - (WH-1)

PIPE MATERIALS

SERVICES	LOCATION	MATERIAL	JOINING METHOD	REMARKS
DOMESTIC COLD & HOT WATER	ABOVE GROUND	RIGID COPPER (TYPE L)	LEAD FREE SOLDERED OR PROPRESS	ALL PIPE PENETRATION SHALL BE PROVIDED WITH PIPE SLEEVES IN COMPLIANCE WITH CPC 2021 312.0 AND 312.10. HOT WATER IS INSULATED WITH 1-1/2" FIBERGLASS.
SANITARY WASTE/ SEWER	ABOVE / BELOW GROUND	CAST IRON SOIL PIPE & FITTINGS	HUBLESS	ALL PIPE PENETRATION SHALL BE PROVIDED WITH PIPE SLEEVES IN COMPLIANCE WITH CPC 2021 312.0 AND 312.10.
CONDENSATE	ABOVE GROUND (INDOOR)	RIGID COPPER (TYPE M)	LEAD FREE BRAZED OR PROPRESS	ALL PIPE PENETRATION SHALL BE PROVIDED WITH PIPE SLEEVES IN COMPLIANCE WITH CPC 2021 312.0 AND 312.10. INSULATE WITH 1/2"ARMAFLEX FOR CONDENSATION CONTROL.
SANITARY VENT	ABOVE GROUND (INDOOR)	CAST IRON SOIL PIPE & FITTINGS	HUBLESS	ALL PIPE PENETRATION SHALL BE PROVIDED WITH PIPE SLEEVES IN COMPLIANCE WITH CPC 2021 312.0 AND 312.10.

NOTE: ALL BRAZED AND SOLDERED JOINTS SHALL BE LEAD FREE. EXPOSED VENT PIPE SHALL BE GALVANIZED PER PLUMBING SPECIFICATIONS
ALL EXISTING CONDENSATE PIPING ABOVE CEILING SHALL BE PROVIDED WITH 1/2" ARMAFLEX INSULATION FOR CONDENSATION CONTROL.

WATER SIZING CALCULATIONS

BUILDING

METER ADDRESS: 44501 N 5TH ST E, LANCASTER, CA 93535

GIVEN BY: LA COUNTY DIST. NO 40-04 TELEPHONE: (661)960-9270

WATER PRESSURE: MAX. 56 PSI MIN. 51 PSI

PRV: YES (X) NO ()

USAGE 133 FU 78 GPM

(A)	LOSS THRU METER= METER SIZE: 3" (E) 2 PSI	
(B)	LOSS THRU RPBF=	10 PSI
(C)	LOSS DUE TO ELEVATION BLDG. HEIGHT (15FT X 0.43) =	6.5 PSI
	TOTAL LOSS	18.5 PSI
	TOTAL PRESSURE AVAILABLE (51-18.5)	32.5 PSI
(E)	RESIDUAL PRESSURE=	25.0 PSI
(F)	PRESSURE AVAILABLE FOR FRICTION LOSS (32.5-25)	7.5 PSI

TOTAL FRICTION LOSS

TDL = 100 X 1.25 = 125 FT

PRESSURE AVAILABLE FOR FRICTION = 7.5 PSI
FRICTION LOSS PER 100 FT.: = (7.5 / 125) X 100 = 6.0 PSI PER 100FT.

COLD WATER SIZING IS BASED ON A MAXIMUM VELOCITY OF 8 FPS AND A PRESSURE DROP OF (5 PSI) / 100'.
HOT WATER AT MAXIMUM VELOCITY OF 5 FEET/SECOND.

PIPE SIZE SCHEDULE

BUILDING

PIPE MATERIAL: TYPE "L" COPPER

PRESSURE LOSS: 6.0 PSI/100FT.

	FLUSH TANK		FLUSH VALVE	
PIPE SIZE INCHES	HOT WATER		COLD WATER TK	COLD WATER FV
	(5FT/S)		(8FT/S)	(8FT/S)
1/2"	2		2	0
3/4"	8		8	0
1"	16		20	0
1 1/4"	28		42	8
1 1/2"	46		83	26
2"	119		254	132
2 1/2"	245		455	329
3"	406		719	666
4"	840		1668	1668

PLUMBING FIXTURE AND EQUIPMENT SCHEDULE

ITEM	FIXTURE	ROUGH-IN CONNECTIONS WASTE	VENT	HOT WATER	COLD WATER	GAS	DESCRIPTION
WC-1	PUBLIC WATER CLOSET (ADA) (4)	4"	2" (1)	--	1"	--	ACORN DURA-WARE 2150 SERIES SIPHON JET TOILET, STAINLESS STEEL, OFF-FLOOR WALL-HUNG, ELONGATED BOWL, 1.28 GPF, TOILET BOWL SHALL BE FABRICATED FROM 14 GA. TYPE 304 S.S. ADA COMPLIANT.
WC-2	PUBLIC WATER CLOSET	4"	2" (1)	--	1"	--	ACORN DURA-WARE 2150 SERIES SIPHON JET TOILET, STAINLESS STEEL, OFF-FLOOR WALL-HUNG, ELONGATED BOWL, 1.28 GPF, TOILET BOWL SHALL BE FABRICATED FROM 14 GA. TYPE 304 S.S.
UR-1	PUBLIC URINAL	2" (3)	1-1/2"	--	3/4"	--	ACORN DURA-WARE 2158-T-1, STAINLESS STEEL FINISHED, REAR-CHASE MOUNT. HIGH EFFICIENCY, TEAR DROP URINAL BOWL, 3/4" TOP SPUD, 2" OUTLET SPUD, AND ANTI-BACKSPLASH WALL. PROVIDE SLOAN "ROYAL 186-0.125" CODE 391263, 0.125GPF. POLISH CHROME FINISH, FIXTURE CONNECTION TOP SPUD, SINGLE FLUSH VALVE. ADA COMPLIANT.
S-1	PUBLIC LAVATORY	2"	1-1/2"	--	1/2"	--	ACRON DURA-WARE 1953, S.S. FINISH, 18" WIDE ADA COMPLIANT LAVATORY WITH RECTANGULAR BOWL. UNIT SHALL CONFORM TO ANSI, UFAS, CBC AND REQUIREMENTS & SHALL BE FABRICATED FROM 16 GA. 304 STAINLESS STEEL, VALVE AND BUBBLER CONFORM WITH LEAD FREE REQUIREMENT OF NSF61, SECTION 9 AND CHSC 116875.
SS-1	SERVICE SINK	2"	1-1/2"	--	1/2"	--	AMERICAN STANDARD "LAKEWELL" 7692.008, SERVICE SINK, ENAMELED CAST IRON. SUPPLIED WITH WALL HANGER WITH DRILLED BACK 2 HOLE ON 8" CENTERS AND RIM GUARD. MEETS OR EXCEEDS ASME A112.19.1 FOR CAST IRON PLUMBING FIXTURE. FAUCET: 8350.243 EXPOSED YOKE WALL-MOUNT UTILITY FAUCET WITH VACUUM BREAKER. TRAP STANDARD: 7798.020 CAST IRON "P" TRAP STANDARD TO WALL AND STRAINER FOR 2" IRON PIPE.
KS-1	KITCHEN SINK	2" (2)	1-1/2"	3/4"	3/4"	--	ELKAY "LUSTERSTONE" LRAD332260" STAINLESS STEEL DOUBLE BOWL DROP-IN SINK. J-35 STRAINER, LA PATTERN P TRAP. CHICAGO FAUCET "1100-E3-317ABCP", PIPE PROTECTION, SLOAN 1/4 TURN STOPS. INSINKERATOR BADGER1 GARBAGE DISPOSER, 3/4HP, 120V,1PH.
FD-1	FLOOR DRAIN	2"	1-1/2"	--	--	--	WATTS MODEL FD-100A-2, EPOXY -COATED CAST IRON FLOOR DRAIN WITH ANCHOR FLANGE, REVERSIBLE CLAMPING COLLAR, VANDAL PROOF, HEEL PROOF TOP NICKEL BRONZE STRAINER, 1/2" MAX. OPENINGS, FLASHING COLLAR, TRAP PRIMER CONNECTION AND P-TRAP.
AD-1	AREA DRAIN	3"	2"	--	--	--	WATTS MODEL FD-100A-3, EPOXY -COATED CAST IRON FLOOR DRAIN WITH ANCHOR FLANGE, REVERSIBLE CLAMPING COLLAR, VANDAL PROOF, HEEL PROOF TOP NICKEL BRONZE STRAINER, 1/2" MAX. OPENINGS, FLASHING COLLAR, TRAP PRIMER CONNECTION AND P-TRAP.
EEW-1	EMERGENCY EYEWASH	1-1/2"	1-1/2"	--	3/4"	--	GUARDIAN MODEL "G1784" EYE/FACE WASH, PEDESTAL MOUNTED, ALL TYPE 204 STAINLESS STEEL. TWO LARGE FS-PLUS SPRAY TYPE OUTLET HEADS DELIVER WATER FOR RISING EYES AND FACES. LISTED 8116. COMPLY WITH ANSI z358.1-2014 & UNIFORM PLUMBING CODE.
HB-1	HOSE BIBB (PUMP HOUSE)	--	--	--	3/4"	--	WOODFORD MODEL Y26, MOUNTED ON STAND PIPE, BACK-FLOW PROTECTED, HOSE BIBB WITH SINGLE CHECK HOUSE CONNECTION, ANTI-SIPHON VACUUM BREAKERS. LOOSE TEE KEY WITH OPTIONAL METAL WHEEL HANDEL. APPROVED UNDER ASSE 1011. LISTED BY IAPMO.
SH-1	PUBLIC SHOWER	--	--	--	3/4"	--	ACORN SECUR-CARE - LIGATURE RESISTANT "LR1741ADA-03-M-MA2", ADA COMPLIANT, RECESSED SOAP DISH, WALL SHOWER. FABRICATED FROM 14GA., TYPE 304 STAINLESS AND #4 FINISH. UNIT CONFORM WITH ANSI, UFAS, AND ADA REQUIREMENT FOR ACCESSIBILITY.
TD-1	TRENCH DRAIN	2	1-1/2"	--	--	--	J R SMITH MODEL 9666, STAINLESS STEEL ADA LINEAR DRAIN. FABRICATED 14 GA TYPE 304 WITH VANDAL PROOF S.S. PERFORATED GRATE WITH 2" NO-HUB BOTTOM OUTLET.
CB-1	CATCH BASIN	4"	2"	--	--	--	ZURN CATCH BASIN MODEL "Z897-12", 14.5"W x 24.5"L x 24"D, MADE OF 12GA. STAINLESS CONFORMING TO ASTM A-240. STAINLESS STEEL REINFORCED SLOTTED GRATE CONFORMING TO ASTM A351, GRADE CF8. GRATE HAS AN OPEN AREA OF 25.61 SQ. IN. PER FOOT. U.S.A. MADE.
DF-1	DRINKING FOUNTAIN (OUTDOOR)	SEE PLAN (5)	--	--	1/2"	--	ELKAY MODEL LK4420BF1UGRY ezH2O OUTDOOR UPPER BOTTLE FILING STATION & BI-LEVEL PEDESTAL NON-FILTERED NON-REFRIGERATED. 316 STAINLESS, HEAVY DUTY VANDAL RESISTANT, LAMINAR FLOW. FLOOR MOUNTED SERVING 2 STATIONS. REQUIRE OPTIONAL BURY ADAPTOR, #97890C. COMPLY WITH NSF/ANSI 61 & 372 (LEAD FREE). ADA & ICC A117.1.
FCO	FLOOR CLEAN OUT	SEE PLAN	--	--	--	--	CAST IRON WITH CAST BRASS COVER ZURN MODEL NO. Z1400-NH-BP-SM
WCO	WALL CLEAN OUT	SEE PLAN	--	--	--	--	CAST IRON WITH CHROME PLATED COVER, ZURN MODEL NO. Z1446-NH-VP W/ ACCESS PANEL.
TP-1	TRAP PRIMER (SINGLE)	--	--	--	1/2"	--	J.R. SMITH FIGURE 2694, FULLY AUTOMATIC, PRESSURE DROP TRAP PRIMER, MEET ASSE 1018 STANDARD, BRONZE BODY, ROUGH BRONZE FINISH, PRESSURE RATING 125 PSIG THREADED OR SOLDERED JOINT INLET AND OUTLET CONNECTION.

NOTES:
(1) CLEANOUT INSTALLED ON VENT OVER FIXTURE.
(2) REFER TO PLANS FOR FIXTURES REQUIRING CONDENSATE DRAIN TAILPIECE CONNECTION.
(3) CLEANOUT INSTALLED ON WASTE PIPE BELOW P-TRAP.
(4) SEE ARCHITECTURAL DRAWINGS FOR FIXTURE MOUNTING HEIGHTS.
(5) SEE LANDSCAPE DRAWINGS FOR FIXTURE MOUNTING LOCATION.

GAS WATER HEATER SCHEDULE

SYMBOL	SERVICE	LOCATION	MANUFACTURER & MODEL NO.	TANK SIZE (GALLONS)	OUTPUT BTU/HR	GAS TYPE	EWT DEG °F	LWT DEG °F	UNIFORM ENERGY FACTOR	FIRST HOUR RATING	GPH RECOVERY	DOE RATED STORAGE VOLUME	VENT DIAMETER	OPERATING WEIGHT (LBS)	REMARKS	ANCHORAGE DETAIL
WH 1	DOMESTIC HOT WATER	EQUIPMENT STORAGE 8	BRADFORD WHITE ULTRA LOW NOx ULG250H553N	48	55,000	NATURAL	50	140	0.64	110 GAL.	53 @ 100°F TEMP RISE	46 GAL.	4"	193	LIGHT-DUTY ULTRA LOW NOx, MEET NAECA OR EPACT REQUIREMENT. T & P VALVE INSTALLED.	8 P-501

HOT WATER EXPANSION TANK SCHEDULE

SYMBOL	SERVICE	LOCATION	DESCRIPTION	MANUFACTURER & MODEL NO.	TANK VOL. Gal	TANK VOL. Liter	MAX ACCEPT. FACTOR	TANK DIAMETER	TANK HEIGHT	MAX TEMP. PRESSURE	SYSTEM CONNECT (NPTM)	SHIP WEIGHT (LBS)	OPERATING WEIGHT (LBS)	REMARKS	ANCHORAGE DETAIL
ET 1	HW EXPANSION TANK	EQUIPMENT STORAGE 8	COMMERCIAL EXPANSION TANK	AMTROL THERM-X-TROL ST-12VC-DD	6.4	24	.50	12 IN	18 IN	200 °F 150 PSIG	3/4 IN	26	80	USE IN CLOSED, POTABLE COLD WATER SYSTEM TO CONTROL PRESSURE BUILDUP. ACCEPT EXPANDED WATER AS TEMPERATURE RISES TO PREVENT RELIEF VALVE DISCHARGE.	1 P-501

PLUMBING FIXTURE AND EQUIPMENT SCHEDULE

ITEM	FIXTURE	ROUGH-IN CONNECTIONS HOT WATER	COLD WATER	DESCRIPTION	ANCHORAGE DETAIL
RPBP 1	REDUCED PRESSURE BACKFLOW PREVENTER	--	2"	WATTS MODEL LF009QT 2" REDUCED PRESSURE ZONE ASSEMBLY WITH BRASS STRAINER FITTING. LEAD FREE. ASSEMBLY SHALL COMPLY WITH STATE CODES & STANDARDS. SHALL MEET AWWA STANDARD C511. NRS GATE VALVE. (PUMP HOUSE)	10 P-501

APPROVAL

CITY APPROVED BY:
DIRECTOR OF PUBLIC WORKS DATE
CITY REVIEWED BY:
SENIOR ENGINEER DATE
SUBMITTED BY:
DATE

CLIENT
LANCASTER
Creating a better tomorrow. Together.
CITY OF LANCASTER
44933 FERN AVENUE
LANCASTER, CA 93534

PROJECT NAME
SAMARITAN'S PURSE PARK FORMERLY KNOWN AS EL DORADO PARK RENOVATION
PWCP NO. 24-008
44501 5th STREET EAST
LANCASTER, CA 93535

ENGINEER/ARCHITECT
IDS
IDS GROUP
1 PETERS CANYON ROAD, SUITE 130
IRVINE, CA. 92606
TEL: 949-387-8500, FAX: 949-387-0800

STAMP
REGISTERED PROFESSIONAL ENGINEER DARREN B. SMITH No. 30642 Exp. 12/31/24 MECHANICAL STATE OF CALIFORNIA

ISSUE

REV.	DESCRIPTION	DATE
	30% CD SET	12/15/23
	60% CD SET	01/19/24
	90% CD SET	02/26/24
1	CLIENT REVISION	04/26/24
	COMPOSITE SET	9/24/25

PROJECT IDENTIFICATION

THIS DRAWING WAS CREATED IN AUTODESK AUTOCAD V. 2021 UNLESS OTHERWISE NOTED.

THE ORIGINAL SIZE OF THIS SHEET IS 30" X 42"

THESE DRAWINGS AND SPECIFICATIONS ARE THE PROPERTY AND COPYRIGHT OF IDS GROUP AND SHALL NOT BE USED ON ANY OTHER PROJECT OR LOCATIONS EXCEPT AS DESCRIBED ON THE DRAWINGS, WITHOUT THE WRITTEN AGREEMENT WITH IDS GROUP.

IDS PROJECT NO.	22X099.01
IDS DRAWN BY	ML
IDS CHECKED BY	DS
IDS APPROVED BY	DS

SHEET TITLE
PLUMBING SCHEDULES

SHEET NUMBER
P-002

SHEET NO. 002 OF 007

CUMULATIVE SHEET NO. XXX OF XXX

PROGRESS SET - NOT FOR CONSTRUCTION

IDS GROUP - FILE LOCATION: S:\PROJECTS\2022\SHARED\22X099.01 LANC - EL DORADO PARK\17 VE SCOPE REDUCTION\CAD\PLUMB\22X0990\1_P-002_SCHED PLOT DATE: 4/26/2024 3:29:28 PM USER: DINH.THAI

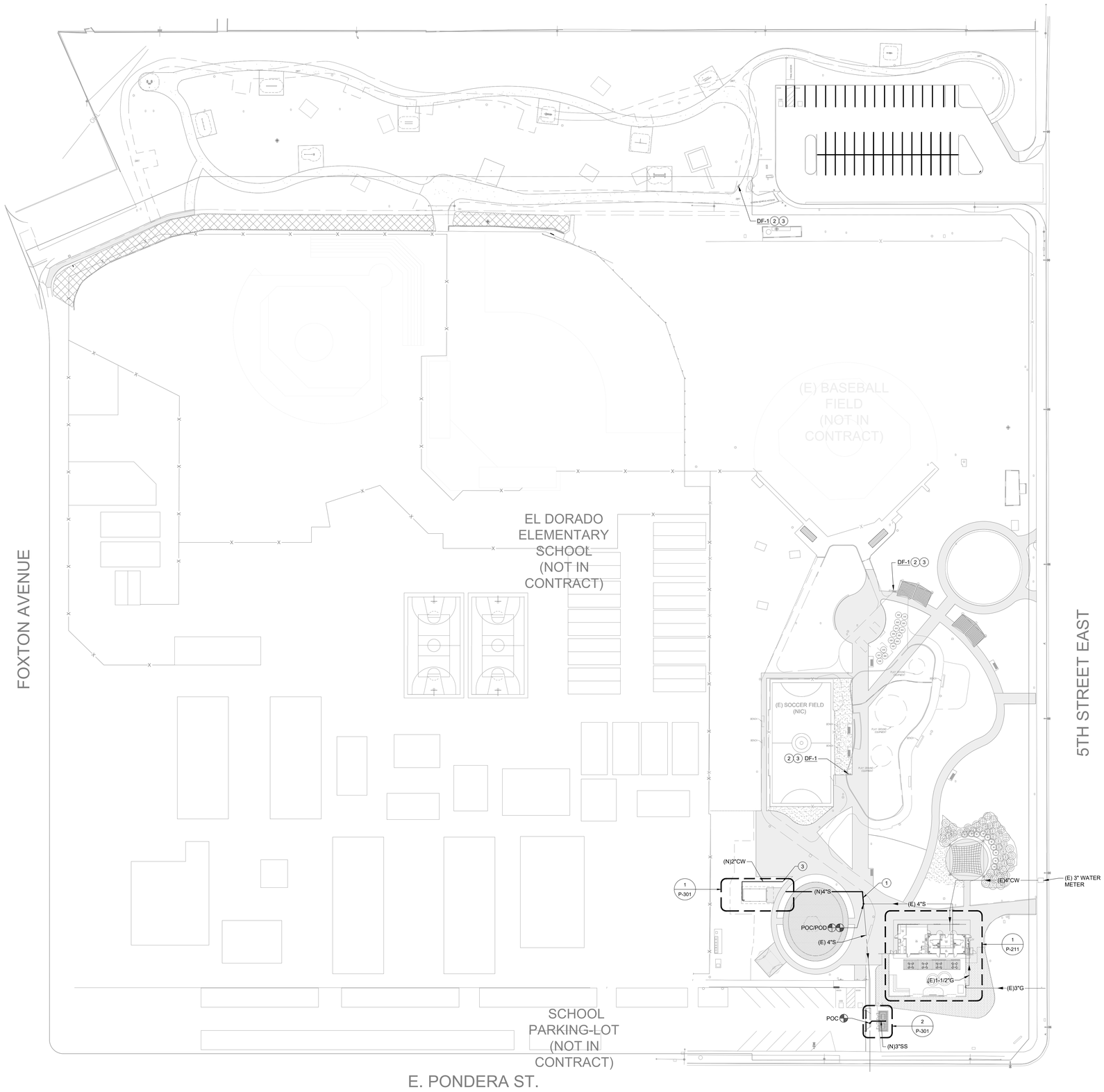

KEYNOTES

1. PIPING BELOW FLOOR / GRADE.
2. PROVIDE AND INSTALL DRINKING FOUNTAIN (DF-1). SEE LANDSCAPE.
3. POC. CONNECT TO EXISTING WATER, SEE CIVIL DWG.

SITE PLAN | 1" = 40' | 1

APPROVAL

CITY APPROVED BY:

DIRECTOR OF PUBLIC WORKS — DATE

CITY REVIEWED BY:

SENIOR ENGINEER — DATE

SUBMITTED BY:

DATE

CLIENT

LANCASTER
Creating a better tomorrow. Together.

CITY OF LANCASTER

44933 FERN AVENUE
LANCASTER, CA 93534

PROJECT NAME

SAMARITAN'S PURSE PARK FORMERLY KNOWN AS EL DORADO PARK RENOVATION

PWCP NO. 24-008

44501 5th STREET EAST
LANCASTER, CA 93535

ENGINEER/ARCHITECT

IDS

IDS GROUP

1 PETERS CANYON ROAD, SUITE 130
IRVINE, CA. 92606
TEL: 949-387-8500, FAX: 949-387-0800

STAMP

REGISTERED PROFESSIONAL ENGINEER
DARREN B. SMITH
No. 30841
Exp. 12/31/24
MECHANICAL
STATE OF CALIFORNIA

ISSUE

REV.	DESCRIPTION	DATE
	30% CD SET	12/15/23
	60% CD SET	01/19/24
	90% CD SET	02/26/24
1	CLIENT REVISION	04/26/24
	COMPOSITE SET	9/24/25

PROJECT IDENTIFICATION

THIS DRAWING WAS CREATED IN AUTODESK AUTOCAD V. 2021 UNLESS OTHERWISE NOTED.

THE ORIGINAL SIZE OF THIS SHEET IS 30" X 42"

THESE DRAWINGS AND SPECIFICATIONS ARE THE PROPERTY AND COPYRIGHT OF IDS GROUP AND SHALL NOT BE USED ON ANY OTHER PROJECT OR LOCATIONS EXCEPT AS DESCRIBED ON THE DRAWINGS, WITHOUT THE WRITTEN AGREEMENT WITH IDS GROUP.

IDS PROJECT NO.	22X099.01
IDS DRAWN BY	ML
IDS CHECKED BY	DS
IDS APPROVED BY	DS

SHEET TITLE

SITE PLAN

SHEET NUMBER

P-101

SHEET NO. 003 OF 007

CUMULATIVE SHEET NO. XXX OF XXX

PROGRESS SET - NOT FOR CONSTRUCTION

IDS GROUP - FILE LOCATION: S:\PROJECTS\2022\SHARED\22X099.01 LANC - EL DORADO PARK\17 VE SCOPE REDUCTION\CAD\PLUMB\22X09901_P-101_SITE PLOT DATE: 4/26/2024 3:29:55 PM USER: MIKE.LIN

DEMOLITION GENERAL NOTES

1. EXISTING FIXTURE REMOVED: EXISTING FIXTURES TO BE REMOVED BY PLUMBING CONTRACTOR. CAP OR PLUG EXISTING SERVICES BELOW FLOOR, ABOVE CEILING, OR BEHIND WALL UNLESS OTHERWISE NOTED. DISPOSE OR SET IN STORAGE AS DIRECTED BY THE OWNER.
2. EXISTING PLUMBING FIXTURE AND PIPING REMAIN: EXISTING PLUMBING FIXTURE OR EQUIPMENT AND PIPING TO REMAIN. CLEAN AND CHECK CONDITION OF FIXTURE AND PIPING. REPAIR/REPLACE IF NECESSARY AS APPROVED BY OWNER.
3. EXISTING WASTE BELOW FLOOR: CAP AND ABANDON ALL EXISTING WASTE PIPING BELOW FLOOR EXCEPT INDICATED TO REUSED. ROUTER AND CLEAN ALL EXISTING WASTE PIPING TO BE REUSED.
4. DEMOLITION OF EXISTING PIPING: EXISTING PIPING ABOVE CEILING AND IN EXISTING WALLS BEING DEMOLISHED, THAT IS NOT BEING REUSED, SHALL BE REMOVED UNLESS OTHERWISE NOTED. COORDINATE EXTENT OF DEMOLITION WITH THE ARCHITECT AND THE GENERAL CONTRACTOR.

DEMOLITION KEYNOTES

1. REMOVE EXISTING PLUMBING FIXTURE. CUT AND CAP EXISTING PLUMBING UTILITIES BELOW FLOOR, BEHIND WALL AND ABOVE CEILING. DISPOSE EXISTING PLUMBING FIXTURES IN AN APPROVED MANNER.
2. EXISTING WATER HEATER TO BE DEMOLISHED AND REPLACED. CUT AND CAP EXISTING DOMESTIC WATER BEHIND WALL AND ABOVE CEILING FOR FUTURE CONNECTION.
3. CUT AND CAP EXISTING GAS LINE FOR FUTURE CONNECTION.

N

PLUMBING DEMOLITION FLOOR PLAN | 1/4" = 1'-0" | 1

APPROVAL

CITY APPROVED BY:

DIRECTOR OF PUBLIC WORKS DATE

CITY REVIEWED BY:

SENIOR ENGINEER DATE

SUBMITTED BY:

DATE

CLIENT

LANCASTER
Creating a better tomorrow. Together.

CITY OF LANCASTER

44933 FERN AVENUE
LANCASTER, CA 93534

PROJECT NAME

SAMARITAN'S PURSE PARK FORMERLY KNOWN AS EL DORADO PARK RENOVATION

PWCP NO. 24-008

44501 5th STREET EAST
LANCASTER, CA 93535

ENGINEER/ARCHITECT

IDS

IDS GROUP

1 PETERS CANYON ROAD, SUITE 130
IRVINE, CA. 92606
TEL: 949-387-8500, FAX: 949-387-0800

STAMP

REGISTERED PROFESSIONAL ENGINEER
DARREN B. SMITH
No. 30841
Exp. 12/31/24
MECHANICAL
STATE OF CALIFORNIA

ISSUE

REV.	DESCRIPTION	DATE
	30% CD SET	12/15/23
	60% CD SET	01/19/24
	90% CD SET	02/26/24
1	CLIENT REVISION	04/26/24
	COMPOSITE SET	9/24/25

PROJECT IDENTIFICATION

THIS DRAWING WAS CREATED IN AUTODESK AUTOCAD V. 2021 UNLESS OTHERWISE NOTED.

THE ORIGINAL SIZE OF THIS SHEET IS 30" X 42"

THESE DRAWINGS AND SPECIFICATIONS ARE THE PROPERTY AND COPYRIGHT OF IDS GROUP AND SHALL NOT BE USED ON ANY OTHER PROJECT OR LOCATIONS EXCEPT AS DESCRIBED ON THE DRAWINGS, WITHOUT THE WRITTEN AGREEMENT WITH IDS GROUP.

IDS PROJECT NO.	22X099.01
IDS DRAWN BY	
IDS CHECKED BY	
IDS APPROVED BY	

SHEET TITLE

PLUMBING DEMOLITION FLOOR PLAN

SHEET NUMBER

P-111

SHEET NO. 004 OF 007

CUMULATIVE SHEET NO. XXX OF XXX

PROGRESS SET - NOT FOR CONSTRUCTION

IDS GROUP - FILE LOCATION: S:\PROJECTS\2022\SHARED\22X099.01 LANC - EL DORADO PARK\17 VE SCOPE REDUCTION\CAD\PLUMB\22X09901_P-111-DEMO PLOT DATE: 4/26/2024 3:29:05 PM USER: DINH THAI

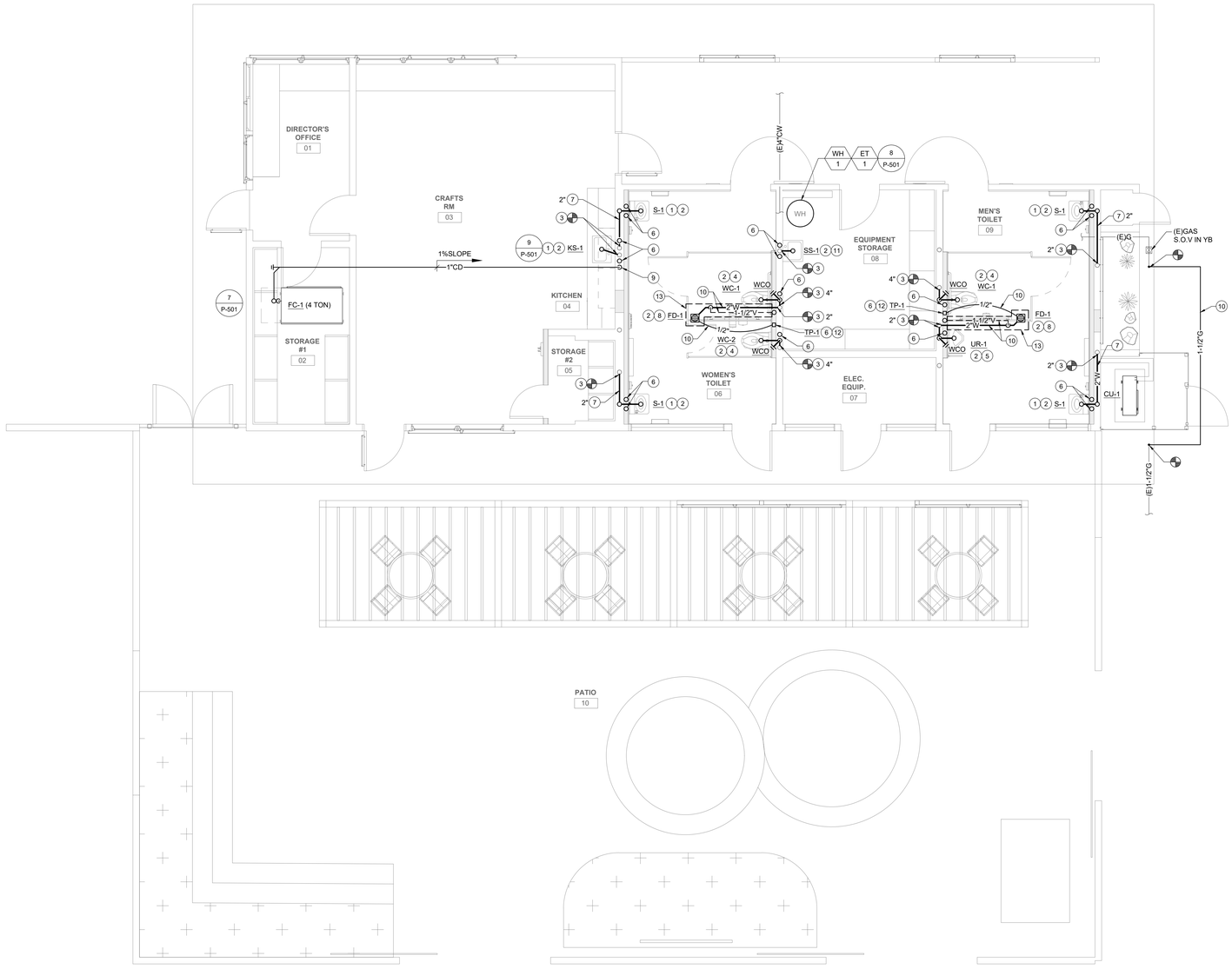

KEYNOTES

1. ROUGH-IN 2"W, 1-1/2"V,1/2"HW AND 1/2"CW AND CONNECT TO PLUMBING FIXTURE.
2. CONNECT NEW VENT PIPING TO EXISTING VENT PIPING BEHIND WALL OR ABOVE CEILING. FIELD VERIFY EXACT PIPING LOCATION.
3. P.O.C TO EXISTING WASTE RISER IN WALL.
4. ROUGH-IN 4"W, 2"V, 1-1/2"CW AND CONNECT TO PLUMBING FIXTURE.
5. ROUGH-IN 2"W, 1-1/2"V, 3/4"CW AND CONNECT TO PLUMBING FIXTURE.
6. CONNECT NEW CW AND/ OR HW TO EXISTING CW AND/ OR HW BEHIND WALL OR ABOVE CEILING. FIELD VERIFY EXACT PIPING LOCATION.
7. RUN PIPE WITH 2% SLOPE IN WALL.
8. ROUGH-IN 2"W, 1-1/2"V AND CONNECT TO FLOOR DRAIN.
9. 1" CD DISCHARGE DOWN IN WALL CONNECT TO KITCHEN SINK TAILPIECE.
10. PIPING BELOW GRADE.
11. ROUGH-IN 2"W, 1-1/2"V AND 1/2"CW AND CONNECT TO PLUMBING FIXTURE.
12. TRAP PRIMER. ROUGH-IN 1/2"CW AND CONNECT TO PLUMBING FIXTURE. PROVIDE WALL ACCESS PANEL.
13. FLOOR SAW CUT. SEE ARCH. DETAIL 8 / A-734.

PLUMBING PROPOSED FLOOR PLAN | 1/4" = 1'-0" | 1

APPROVAL

CITY APPROVED BY:

DIRECTOR OF PUBLIC WORKS — DATE

CITY REVIEWED BY:

SENIOR ENGINEER — DATE

SUBMITTED BY:

DATE

CLIENT

LANCASTER
Creating a better tomorrow. Together.

CITY OF LANCASTER

44933 FERN AVENUE
LANCASTER, CA 93534

PROJECT NAME

SAMARITAN'S PURSE PARK FORMERLY KNOWN AS EL DORADO PARK RENOVATION

PWCP NO. 24-008

44501 5th STREET EAST
LANCASTER, CA 93535

ENGINEER/ARCHITECT

IDS

IDS GROUP

1 PETERS CANYON ROAD, SUITE 130
IRVINE, CA 92606
TEL: 949-387-8500, FAX: 949-387-0800

STAMP

REGISTERED PROFESSIONAL ENGINEER
KAREN B. SMALLEY
No. 30841
Exp. 12/31/24
MECHANICAL
STATE OF CALIFORNIA

ISSUE

REV.	DESCRIPTION	DATE
	30% CD SET	12/15/23
	60% CD SET	01/19/24
	90% CD SET	02/26/24
1	CLIENT REVISION	04/26/24
	COMPOSITE SET	9/24/25

PROJECT IDENTIFICATION

THIS DRAWING WAS CREATED IN AUTODESK AUTOCAD V. 2021 UNLESS OTHERWISE NOTED.

THE ORIGINAL SIZE OF THIS SHEET IS 30" X 42"

THESE DRAWINGS AND SPECIFICATIONS ARE THE PROPERTY AND COPYRIGHT OF IDS GROUP AND SHALL NOT BE USED ON ANY OTHER PROJECT OR LOCATIONS EXCEPT AS DESCRIBED ON THE DRAWINGS, WITHOUT THE WRITTEN AGREEMENT WITH IDS GROUP.

IDS PROJECT NO.	22X099.01
IDS DRAWN BY	SS
IDS CHECKED BY	KB
IDS APPROVED BY	DS

SHEET TITLE

PLUMBING PROPOSED FLOOR PLAN

SHEET NUMBER

P-211

SHEET NO. 005 OF 007

CUMULATIVE SHEET NO. XXX OF XXX

PROGRESS SET - NOT FOR CONSTRUCTION

IDS GROUP - FILE LOCATION: S:\PROJECTS\2022\SHARED\22X099.01 LANC - EL DORADO PARK\17 VE SCOPE REDUCTION\CAD\PLUMB\22X09901_P-211_NEW PLOT DATE: 4/26/2024 3:28:34 PM, USER: DINH.THAI

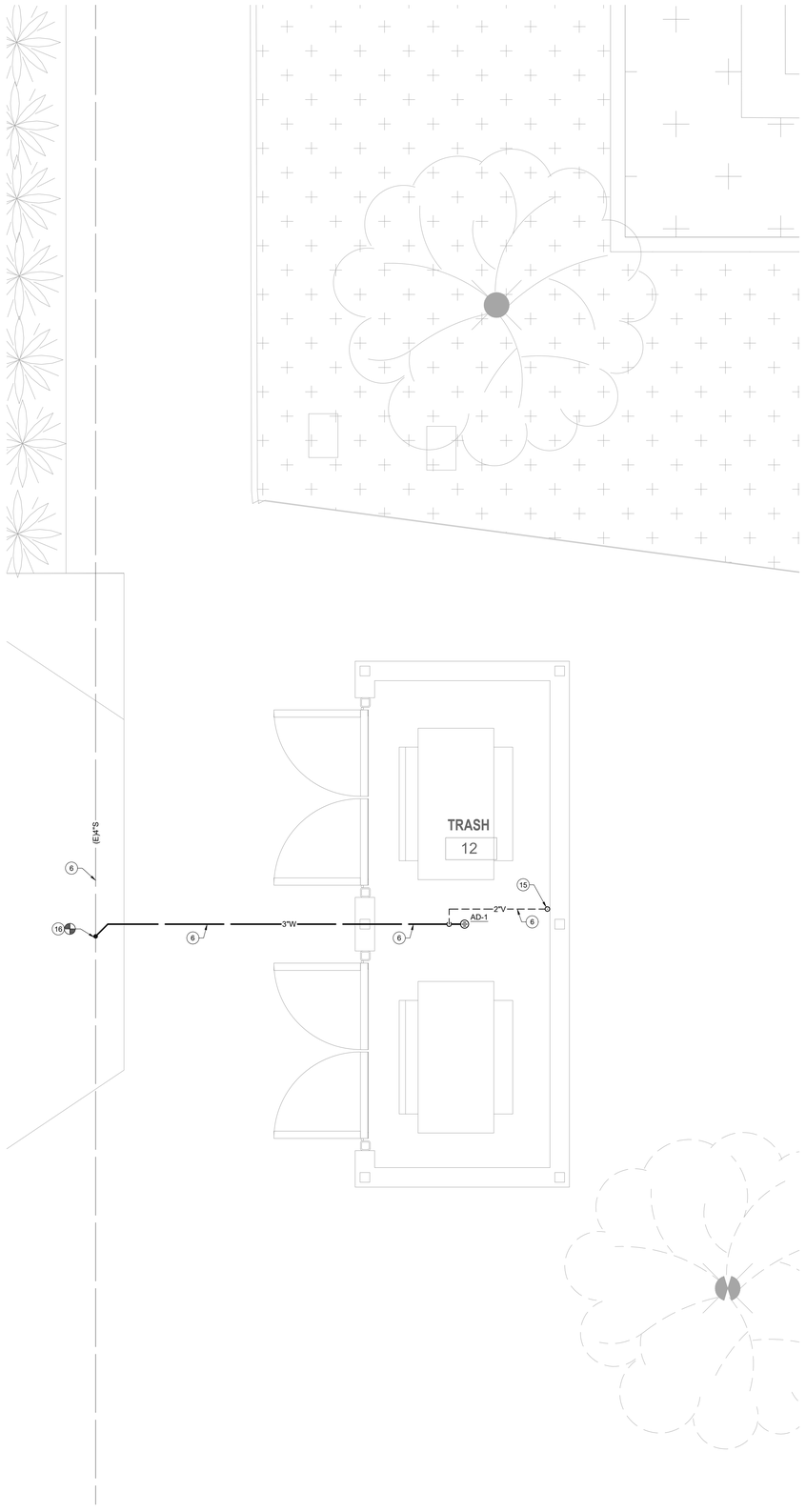

TRASH ENCLOSURE PLUMBING FLOOR PLAN | 1/2" = 1'-0" | 2

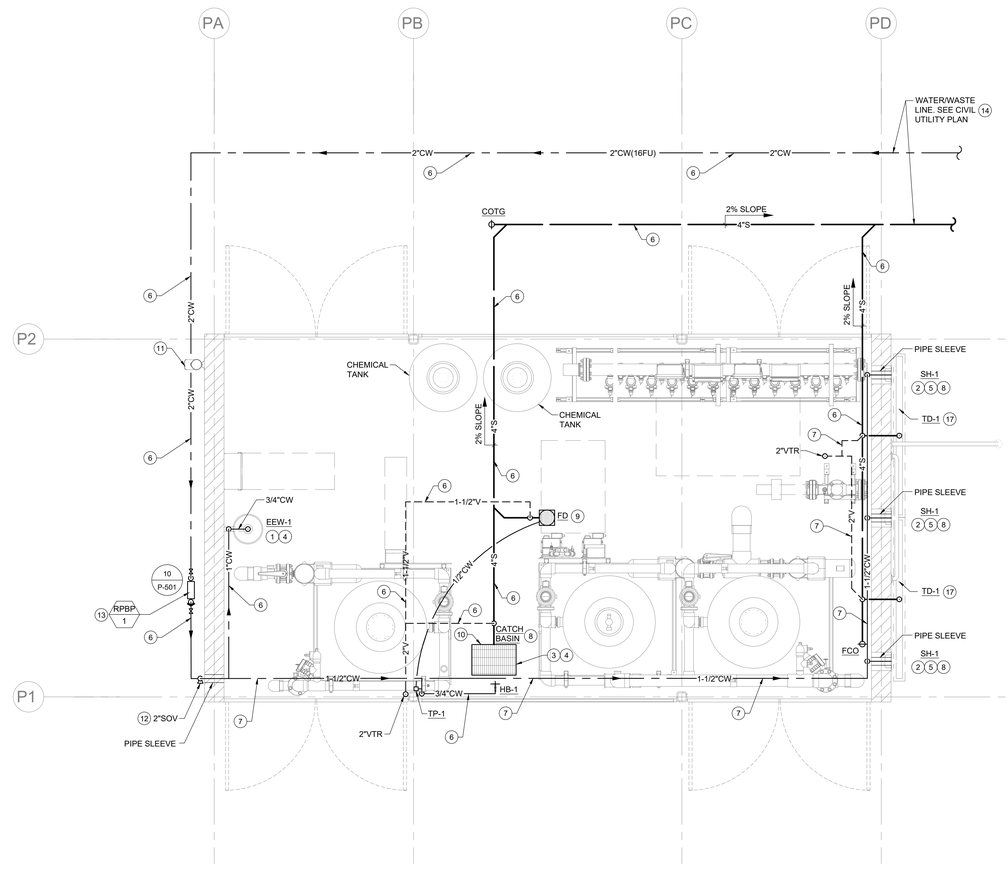

PUMP HOUSE PLUMBING FLOOR PLAN | 1/2" = 1'-0" | 1

KEYNOTES

1. INSTALL NEW EMERGENCY EYE WASH.
2. INSTALL NEW SHOWER FIXTURES.
3. INSTALL NEW HOSE BIBB.
4. ROUGH-IN 3/4"CW AND CONNECT TO FIXTURE.
5. ROUGH-IN 1 1/2"CW AND CONNECT TO FIXTURE.
6. PIPING BELOW GRADE.
7. PIPING ABOVE FLOOR.
8. ROUGH-IN 4"W, 2"V AND CONNECT TO FIXTURE.
9. ROUGH-IN 2"W, 1-1/2"V AND CONNECT TO FIXTURE.
10. INSTALL CATCH BASIN.
11. INSTALL NEW ROOF DRAIN. COORDINATE WITH ARCHITECTURE.
12. BUILDING SHUT OFF VALVE ON RISER.
13. PROVIDE PROTECTIVE CAGE. COORDINATE WITH ARCHITECTURE.
14. SEE CIVIL UTILITY PLAN FOR CONTINUATION.
15. 2" VENT UP. TERMINATE AT 8' MIN. A.F.F. SECURE AND ANCHOR VENT PIPE TO WALL ENCLOSURE.
16. CONNECT 3"W TO EXISTING 4" SEWER. VERIFY EXACT LOCATION OF MAIN SEWER LINE.
17. INSTALL NEW TRENCH DRAIN. COORDINATE WITH ARCHITECTURE.

APPROVAL

CITY APPROVED BY:
DIRECTOR OF PUBLIC WORKS DATE
CITY REVIEWED BY:
SENIOR ENGINEER DATE
SUBMITTED BY:
DATE

CLIENT

LANCASTER
Creating a better tomorrow. Together.

CITY OF LANCASTER
44933 FERN AVENUE
LANCASTER, CA 93534

PROJECT NAME

SAMARITAN'S PURSE PARK FORMERLY KNOWN AS EL DORADO PARK RENOVATION

PWCP NO. 24-008

44501 5th STREET EAST
LANCASTER, CA 93535

ENGINEER/ARCHITECT

IDS
IDS GROUP
1 PETERS CANYON ROAD, SUITE 130
IRVINE, CA. 92606
TEL: 949-387-8500, FAX: 949-387-0800

STAMP

REGISTERED PROFESSIONAL ENGINEER
DARREN B. SMITH
No. 30841
Exp. 12/31/24
MECHANICAL
STATE OF CALIFORNIA

ISSUE

REV.	DESCRIPTION	DATE
	30% CD SET	12/15/23
	60% CD SET	01/19/24
	90% CD SET	02/26/24
1	CLIENT REVISION	04/26/24
	COMPOSITE SET	9/24/25

PROJECT IDENTIFICATION

THIS DRAWING WAS CREATED IN AUTODESK AUTOCAD V. 2021 UNLESS OTHERWISE NOTED.

THE ORIGINAL SIZE OF THIS SHEET IS 30" X 42"

THESE DRAWINGS AND SPECIFICATIONS ARE THE PROPERTY AND COPYRIGHT OF IDS GROUP AND SHALL NOT BE USED ON ANY OTHER PROJECT OR LOCATIONS EXCEPT AS DESCRIBED ON THE DRAWINGS, WITHOUT THE WRITTEN AGREEMENT WITH IDS GROUP.

IDS PROJECT NO.	22X099.01
IDS DRAWN BY	ML
IDS CHECKED BY	DS
IDS APPROVED BY	DS

SHEET TITLE

PUMP HOUSE & TRASH ENCLOSURE PLUMBING FLOOR PLAN

SHEET NUMBER

P-301

SHEET NO. 006 OF 007

CUMULATIVE SHEET NO. XXX OF XXX

PROGRESS SET - NOT FOR CONSTRUCTION

IDS GROUP - FILE LOCATION: S:\PROJECTS\2022\SHARED\22X099.01 LANC - EL DORADO PARK\17 VE SCOPE REDUCTION\CAD\PLUMB\22X09901_P-301_ENLRG PLOT DATE: 4/26/2024 3:28:12 PM USER: DINH.THAI

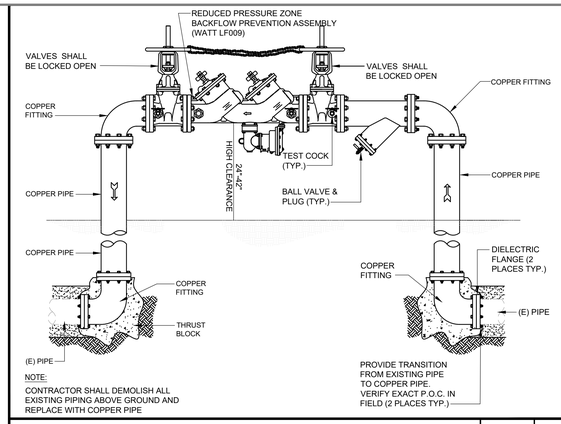

NOTE:
CONTRACTOR SHALL DEMOLISH ALL EXISTING PIPING ABOVE GROUND AND REPLACE WITH COPPER PIPE

REDUCED PRESSURE ZONE BACKFLOW PREVENTION ASSEMBLY | NO SCALE | 10

NOTES:
(1) H= FAN INLET PRESSURE (IN W.C.) +1", BUT NOT LESS THAN 2"

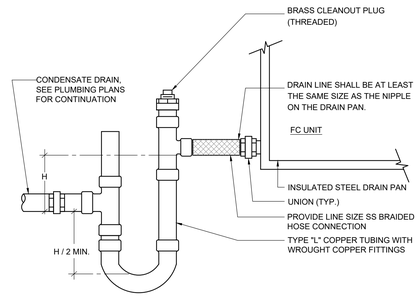

HVAC CONDENSATE DRAIN (DRAW THRU) | NO SCALE | 7

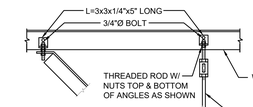

NOTE:
1. SEISMIC BRACING IS NOT REQUIRED PER ASCE 7-10, SECTION 13.6.8.3 FOR 1"Ø PIPE.
2. DIAGONAL BRACE ONLY REQUIRED TO PREVENT COLLISION WITH ADJACENT UTILITIES OR STRUCTURE.
3. VERTICAL PIPE SUPPORT SPACING SHALL BE PER CPC.

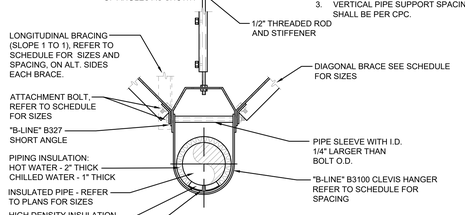

PIPE SIZE	LONGITUDINAL ANGLE AT 30'-0" O.C.	VERTICAL ANGLE	DIAGONAL BRACE AT16'-0" O.C.	ATTACH BOLT
UP TO 2 1/2	2 1/2X2 1/2X16 GA.	2X2X16 GA.	2 1/2X2 1/2X16 GA.	3/8"

PIPE HANGER SUPPORT | NO SCALE | 4

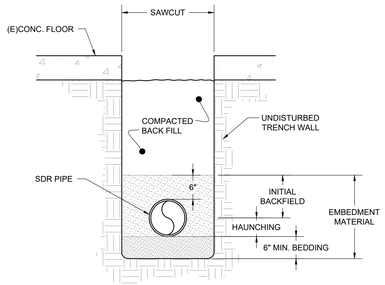

TYPICAL PIPE TRENCH | NO SCALE | 13

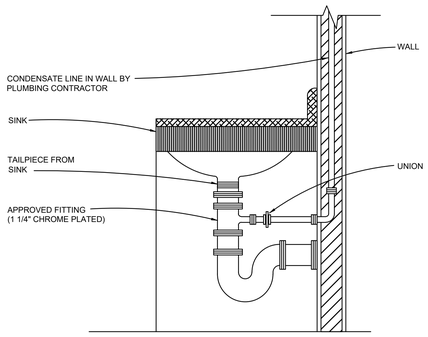

CONDENSATE TO LAV TAILPIECE | NO SCALE | 9

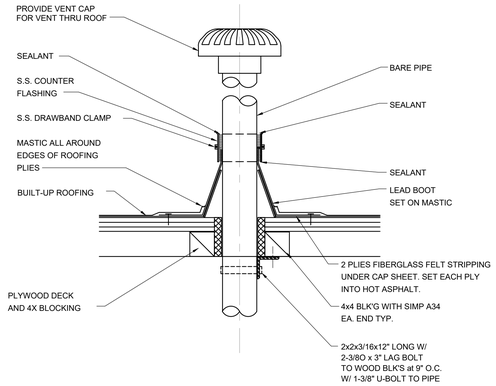

VENT THRU ROOF | NO SCALE | 6

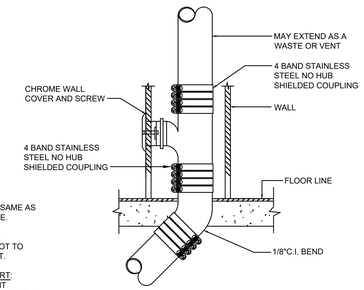

NOTES:
1. BALANCE OF PIPING SAME AS CLEANOUT TO GRADE.
2. VERTICAL SUPPORT: AT EACH FLOOR, NOT TO EXCEED TO 15 FEET.
3. HORIZONTAL SUPPORT: EVERY OTHER JOINT UNLESS OVER 4 FEET THEN SUPPORT EACH JOINT.

WALL CLEANOUT | NO SCALE | 3

INSTALLATION INSTRUCTIONS

1. THREAD NUT (ITEM 3) ONTO RODS (ITEM 2) (ONE NUT PER ROD).
2. THREAD ROD INTO ADAPTER CYLINDER (ITEM 1) AND TIGHTEN NUTS AGAINST CYLINDER SECURELY.
3. PLACE WASHERS (ITEM 6) ON BOLTS (ITEM 4) (ONE WASHER PER BOLT). ASSEMBLE BOLTS INTO ADAPTER FLANGE. THREAD BOLTS ALL THE WAY IN.
4. SECURE ADAPTER INTO CONCRETE FORMS AS PER STANDARD PRACTICE AND AS SHOWN BELOW. BE SURE TO ALIGN ADAPTER FOR PROPER LOCATION OF WATER INLET LINE, DRAIN LINE, AND REQUIRED FOUNTAIN ALIGNMENT.
5. AFTER SUFFICIENT CURE OF CONCRETE, REMOVE FLANGE BOLTS AND WASHERS.
6. MOUNT FOUNTAIN ASSEMBLY PER INSTRUCTIONS SUPPLIED WITH FOUNTAIN AND ITEMS 4, 5, & 6 (SEE BELOW).
7. FOUNTAIN ADAPTER CYLINDER.

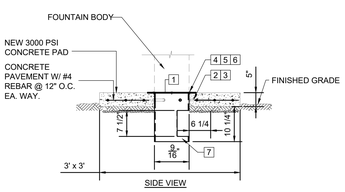

NEW CONCRETE PAD DETAIL | NO SCALE | 12

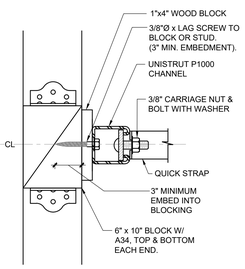

DETAIL "A"

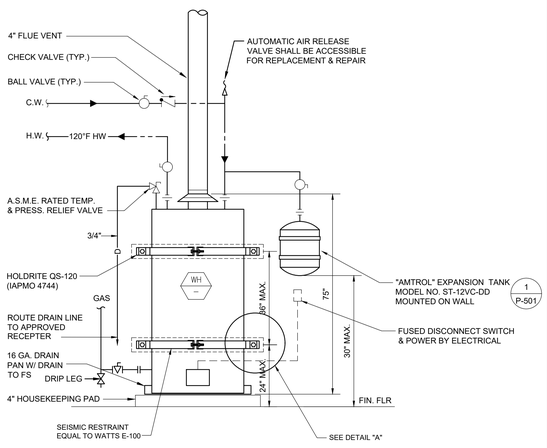

GAS WATER HEATER | NO SCALE | 8

NOTES:
1. PENETRATIONS OF PIPES, CONDUITS, ETC., IN WALLS, FLOORS OR CEILING ASSEMBLIES REQUIRING PROTECTED OPENINGS SHALL BE FIRE STOPPED. FIRE STOP MATERIAL SHALL BE A TESTED ASSEMBLY AS PRESCRIBED IN U.B.C. STANDARD 7-5 AND AS APPROVED BY THE OSHPD FIRE MARSHALL (C.B.C. 714).
2. PLUMBING CONTRACTOR TO FOLLOW CBC 712.3, CPC 301, 701.1.2.2.

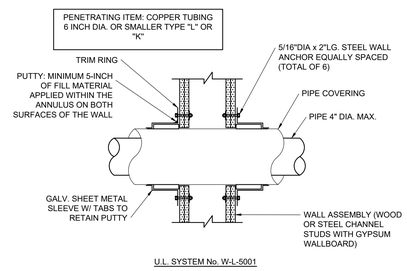

U.L. SYSTEM No. W-L-5001

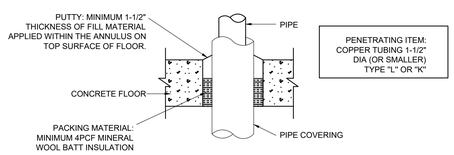

U.L. SYSTEM No. C-AJ-5054

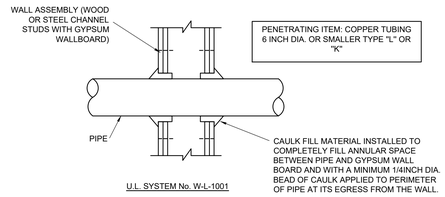

U.L. SYSTEM No. W-L-1001

PIPING PENETRATION FIRE RATED WALL | NO SCALE | 5

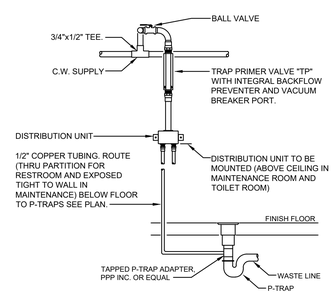

NOTES:
THE TRAP PRIMER AND DISTRIBUTION UNIT SHALL BEHIND ACCESS PANEL

TRAP PRIMER | NO SCALE | 2

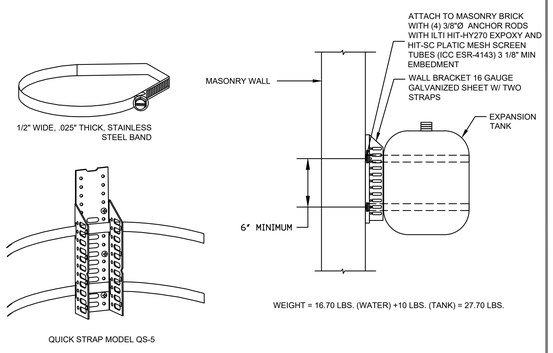

EXPANSION TANK SUPPORT | NO SCALE | 1

NOTES:
(1) PIPING BELOW GRADE.
(2) ROUGH-IN & CONNECT 3/4"CW & 2" WASTE RECONNECT TO (N) WATER & WASTE.
(3) NEW CONCRETE PAD.
(4) (6) 3/8"Ø STAINLESS STEEL EXPANSION BOLT WITH STAINLESS STEEL WASHER.
(5) EMBED BOLT 4" MAX TO (N) CONCRETE PAD.
(6) NEW 12" NPTM SUPPLY INLET - FLEX CONNECTION.
(7) PROVIDE (N) 2" DIA. DRAIN PIPE.

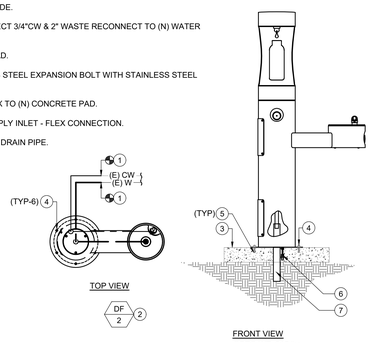

DRINKING FOUNTAIN (OUTDOOR) | NO SCALE | 11

APPROVAL

CITY APPROVED BY:
DIRECTOR OF PUBLIC WORKS — DATE
CITY REVIEWED BY:
SENIOR ENGINEER — DATE
SUBMITTED BY:
DATE

CLIENT
LANCASTER
Creating a better tomorrow. Together.
CITY OF LANCASTER
44933 FERN AVENUE
LANCASTER, CA 93534

PROJECT NAME
SAMARITAN'S PURSE PARK FORMERLY KNOWN AS EL DORADO PARK RENOVATION
PWCP NO. 24-008
44501 5th STREET EAST
LANCASTER, CA 93535

ENGINEER/ARCHITECT
IDS
IDS GROUP
1 PETERS CANYON ROAD, SUITE 130
IRVINE, CA. 92606
TEL: 949-387-8500, FAX: 949-387-0800

STAMP
REGISTERED PROFESSIONAL ENGINEER BARRON B. SMITH No. 30841 Exp. 12/31/24 MECHANICAL STATE OF CALIFORNIA

ISSUE

REV.	DESCRIPTION	DATE
	30% CD SET	12/15/23
	60% CD SET	01/19/24
	90% CD SET	02/26/24
1	CLIENT REVISION	04/26/24
	COMPOSITE SET	9/24/25

PROJECT IDENTIFICATION
THIS DRAWING WAS CREATED IN AUTODESK AUTOCAD V. 2021 UNLESS OTHERWISE NOTED.
THE ORIGINAL SIZE OF THIS SHEET IS 30" X 42"
THESE DRAWINGS AND SPECIFICATIONS ARE THE PROPERTY AND COPYRIGHT OF IDS GROUP AND SHALL NOT BE USED ON ANY OTHER PROJECT OR LOCATIONS EXCEPT AS DESCRIBED ON THE DRAWINGS, WITHOUT THE WRITTEN AGREEMENT WITH IDS GROUP.

IDS PROJECT NO.	22X099.01
IDS DRAWN BY	ML
IDS CHECKED BY	DS
IDS APPROVED BY	DS

SHEET TITLE
PLUMBING DETAILS

SHEET NUMBER
P-501
SHEET NO. 007 OF 007
CUMULATIVE SHEET NO. XXX OF XXX

PROGRESS SET - NOT FOR CONSTRUCTION

IDS GROUP - FILE LOCATION: S:\PROJECTS\2022\SHARED\22X099.01 LANC - EL DORADO PARK\17 VE SCOPE REDUCTION\CAD\PLUMB\22X099.01_P-501_DETAIL PLOT DATE: 4/26/2024 3:27:31 PM USER: MIKE.LIN

IDS GROUP - FILE LOCATION: S:\PROJECTS\2022\SHARED\22X099.01 LANC - EL DORADO PARK\05 CAD\05 ELEC\2023-12-05-EXISTING CC FILES\E-01_E-01.1_SHEET 01_02 GEN SHEET PLOT DATE: 12/5/2024 7:23:23 PM USER: MICHAEL.REED

GENERAL ELECTRICAL NOTES

1. SYMBOLS ARE NOT NECESSARILY USED IN THIS PROJECT.
2. IT IS THE INTENT OF THESE DRAWINGS AND SPECIFICATIONS TO ESTABLISH A STANDARD OF QUALITY. THE ENGINEER RESERVES THE RIGHT TO ALLOW OTHER METHODS AND MATERIALS NOT REFLECTED HEREIN. THE CONTRACTOR SHALL BE RESPONSIBLE TO REQUEST THE ENGINEER WAIVE THE STANDARDS TO ALLOW ALTERNATE MEANS AND METHODS PRIOR TO BEGINNING THE PROJECT. CONTRACT DOCUMENT REVISIONS TO ACCOMMODATE INSTALLED CONDITIONS, WITHOUT PRIOR APPROVAL, WILL RESULT IN ADDITIONAL DESIGN CHARGES TO THE CONTRACTOR.
3. ELECTRICAL WORK SHALL BE PERFORMED IN A WORKMANLIKE MANNER IN ACCORDANCE WITH THE NECA INSTALLATION STANDARDS TO THE SATISFACTION OF THE ARCHITECT AND ENGINEER.
4. WORK, MATERIALS AND EQUIPMENT SHALL CONFORM TO THE CURRENTLY ACCEPTED EDITION OF APPLICABLE NATIONAL, STATE AND CITY CODES AND ORDINANCES.
5. ELECTRICAL SYSTEM COMPONENTS SHALL BE LISTED OR LABELED BY UL OR OTHER RECOGNIZED TESTING FACILITY AS ALLOWED BY AUTHORITY HAVING JURISDICTION.
6. WHERE AN APPARENT DISCREPANCY EXISTS BETWEEN THE REQUIREMENTS OF THE GENERAL NOTES AND INFORMATION PORTRAYED IN THE ELECTRICAL DRAWINGS, THE CONTRACTOR SHALL INCLUDE IN HIS BID THE COST OF THE GREATER QUALITY OR QUANTITY.
7. CONTRACTOR SHALL VISIT JOB SITE PRIOR TO BID AND VERIFY EXISTING CONDITIONS. CONTRACTOR SHALL INCLUDE IN BASE BID COSTS REQUIRED FOR PERMITS AND INSPECTIONS.
8. CONTRACTOR SHALL VERIFY, WITH OWNER'S REPRESENTATIVE PRIOR TO SUBMITTING BID, ALLOWABLE WORKING HOURS, EMPLOYEE PARKING AREAS, MATERIAL DELIVERY, STORAGE REQUIREMENTS, DEMOLITION AND REMOVAL OF CONSTRUCTION DEBRIS, AS WELL AS DAILY CLEAN UP REQUIREMENTS. INCLUDE COSTS IN BID FOR DUST BARRIERS, DUMPSTERS ETC. AS REQUIRED FOR THE DURATION OF THE PROJECT. PERFORM WORK AS DIRECTED BY OWNER'S REPRESENTATIVE AND ARCHITECT.
9. ELECTRICAL SYSTEMS SHALL BE TESTED FOR PROPER OPERATION. IF TESTS SHOW THAT WORK IS DEFECTIVE, CONTRACTOR SHALL MAKE NECESSARY CORRECTIONS.
10. CONTRACTOR SHALL GUARANTEE WORK AGAINST DEFECTS IN MATERIALS AND WORKMANSHIP WHICH MAY OCCUR UNDER NORMAL USE FOR A PERIOD OF ONE YEAR AFTER OWNER'S ACCEPTANCE. DEFECTS SHALL BE PROMPTLY CORRECTED BY CONTRACTOR WITHOUT ADDITIONAL CHARGE TO OWNER.
11. PROVIDE AS-BUILT DRAWINGS TO ARCHITECT. DRAWINGS SHALL INCLUDE ACCURATE CONDUIT AND DEVICE LOCATIONS DIMENSIONED FROM PERMANENT LANDMARKS SUCH AS BUILDING WALLS.
12. DO NOT SCALE ELECTRICAL DRAWINGS. VERIFY EXACT LOCATION OF ALL DEVICES, JUNCTION BOXES, LIGHTING FIXTURES, WITH ARCHITECTURAL AND INTERIOR DESIGN DRAWINGS PRIOR TO INSTALLATION. CONTRACTOR SHALL VERIFY THE EXACT LOCATION OF MECHANICAL EQUIPMENT AND OTHER EQUIPMENT REQUIRING ELECTRICAL CONNECTION PRIOR TO ROUGH-IN. EVERY OUTLET HEIGHT SHALL BE VERIFIED ON EACH WALL WITH THE INTERIOR PLANNING AND DESIGN DRAWINGS. COORDINATE WITH CABINET SHOP DRAWINGS TO ENSURE PROPER HEIGHT AND LOCATION WITH RESPECT TO MILLWORK, EQUIPMENT.
13. THESE DRAWINGS INDICATE THE FINISHED REQUIREMENTS FOR THE ELECTRICAL SYSTEMS, EQUIPMENT, LIGHTING FIXTURES, OUTLETS AND DEVICES. DUE TO STRUCTURAL CONDITIONS, MECHANICAL DUCT, PIPING CONFLICTS, OR OTHER LEGITIMATE REASONS, THE CONTRACTOR MAY DESIRE TO INSTALL THE WORK INDICATED IN A MANNER DIFFERENT FROM THAT SHOWN. SUCH CHANGES SHALL BE PRESENTED TO THE OWNER'S REPRESENTATIVE FOR REVIEW AND APPROVAL PRIOR TO PROCEEDING. UPON APPROVAL, THE WORK SHALL BE PERFORMED AND THE AS-BUILT DRAWINGS SHALL BE REVISED TO ACCURATELY REFLECT THE WORK AS ACTUALLY INSTALLED.
14. RACEWAY SYSTEMS ARE SHOWN DIAGRAMMATICALLY. ACTUAL LOCATION AND ROUTING SHALL BE DETERMINED BY CONTRACTOR TO SUIT FIELD CONDITIONS.
15. PROVIDE DEDICATED NEUTRAL FOR EACH NEW CIRCUIT. HOME RUN CONDUCTORS MAY BE COMBINED INTO ONE CONDUIT. NO RACEWAY OR CABLE SHALL CONTAIN MORE THAN NINE (9) CURRENT CARRYING CONDUCTORS. WHERE MULTIPLE CONDUCTORS IN EXCESS OF THREE (3) ARE INDICATED ON THESE DRAWINGS, THEY HAVE BEEN DERATED AS REQUIRED BY NEC ARTICLE 310 REQUIREMENTS.
16. WHERE ALLOWED, MC CABLE MAY BE INSTALLED PER NEC ARTICLE 330. WHERE MULTIPLE CABLES ARE ROUTED ADJACENT TO EACH OTHER (BUNDLED), A MINIMUM SEPARATION OF ONE (1) CABLE DIAMETER (LARGEST) SHALL BE REQUIRED.
17. PLASTIC CABLE TIES SHALL NOT BE USED AS A MEANS OF SUPPORT FOR MC CABLE. USE ONLY APPROVED CABLE SUPPORTS PER CABLE MANUFACTURER'S INSTALLATION REQUIREMENTS.
18. RACEWAYS SHALL BE INSTALLED CONCEALED (IN CMU OR OTHER WALL) WHENEVER POSSIBLE. RACEWAYS INSTALLED EXPOSED SHALL BE ROUTED OUT OF PUBLIC VIEW AS MUCH AS POSSIBLE. RACEWAYS SHALL BE RUN PARALLEL WITH, OR AT RIGHT ANGLE TO WALLS.
19. PROVIDE APPROVED EXPANSION FITTINGS WHERE RACEWAYS CROSS BUILDING EXPANSION JOINTS. PROVIDE BONDING JUMPER(S) SIZED PER CODE WHERE REQUIRED. PROVIDE FITTINGS REQUIRED FOR A COMPLETE INSTALLATION. REFER TO ARCHITECTURAL DRAWINGS FOR EXPANSION JOINT LOCATION(S).
20. MINIMUM RACEWAY SIZE SHALL BE 1/2". MINIMUM HOMERUN SIZE SHALL BE 3/4". MINIMUM CONDUCTOR SIZE SHALL BE #12 AWG U.N.O. TYPICAL. POWER RELATED CONDUITS SHALL HAVE A CODE SIZE GROUND WIRE INSTALLED IN EACH RUN.
21. CONTRACTOR SHALL PROVIDE PULL CORDS IN ALL EMPTY CONDUITS. WHERE MORE THAN ONE CONDUIT TERMINATES IN A JUNCTION BOX, THE CONTRACTOR SHALL IDENTIFY EACH CONDUIT AND JUNCTION BOX IN A MANNER ALLOWING IDENTIFICATION AFTER WALL FINISHES HAVE BEEN APPLIED.
22. CONTRACTOR SHALL PROVIDE RACEWAY SYSTEMS INDICATED ON THE DRAWING PER NEC REQUIREMENTS AND GENERAL NOTES. ANY DEVIATION FROM THE WIRING METHODS INDICATED SHALL BE ALLOWED ONLY BY SPECIFIC WRITTEN APPROVAL FROM EITHER THE ARCHITECT, ENGINEER OR OWNER. CONTRACTOR'S BID SHALL INCLUDE COSTS FOR RACEWAY SYSTEMS AS SPECIFIED UNLESS SPECIFIC WRITTEN APPROVAL FOR AN ALTERNATIVE WIRING METHOD IS OBTAINED FROM EITHER THE ARCHITECT, ENGINEER OR OWNER AND IS SUBMITTED AS PART OF CONTRACTOR'S FORMAL BID PROPOSAL.
23. CONTRACTOR SHALL BE RESPONSIBLE FOR CORRECT SIZE AND INSTALLATION OF OUTLET, PULL AND JUNCTION BOXES IN ACCORDANCE WITH NEC 314-16. BOXES SHALL BE MINIMUM 4" SQUARE BY 1-1/2" DEEP OR AS INDICATED ON THE DRAWINGS. BOXES SHALL BE RECESSED WITH COVER PLATE TO SUIT THE INTENDED APPLICATION.
24. REFER TO THE ARCHITECTURAL REFLECTED CEILING PLAN(S) FOR EXACT LOCATION OF CEILING MOUNTED LIGHTING FIXTURES. ARCHITECTURAL DRAWINGS SHALL GOVERN IN CASE OF CONFLICT WITH THESE DRAWINGS.
25. PRIOR TO INSTALLATION, CONTRACTOR SHALL REVIEW THE COMPLETE SET OF CONSTRUCTION DOCUMENTS FOR CONFLICTS WITH OTHER TRADES. CONTRACTOR SHALL BE RESPONSIBLE TO COORDINATE WORK WITH OTHER TRADES TO AVOID CONFLICT DURING INSTALLATION. CONTRACTOR SHALL MAKE MINOR ADJUSTMENTS IN EQUIPMENT LOCATION AND ROUTING AS NECESSARY.
26. CONTRACTOR SHALL BE RESPONSIBLE TO PROPERLY CUT AND PATCH EXISTING CONSTRUCTION AS REQUIRED TO INSTALL NEW ELECTRICAL WORK PATCHING SHALL BE OF THE SAME MATERIALS, WORKMANSHIP AND FINISH AS THE EXISTING WORK AND SHALL ACCURATELY MATCH SURROUNDING WORK TO THE SATISFACTION OF THE ARCHITECT.
27. ELECTRICAL EQUIPMENT SHALL HAVE SUFFICIENT GUTTER SPACE AND LUGS TO ACCOMMODATE QUANTITY AND SIZE OF CONDUCTORS REQUIRED. CONTRACTORS SHALL PROVIDE EQUIPMENT WITH OVERSIZED ENCLOSURES WHERE REQUIRED.
28. NEW PANELBOARDS AND SWITCHBOARDS SHALL BE OF THE SAME MANUFACTURER AND HAVE LOCKING DOORS AND BE KEYED THE SAME U.N.O.
29. PROVIDE TYPE WRITTEN UPDATED PANEL DIRECTORY TO BE MOUNTED ON INSIDE OF PANEL DOOR COVERS. DIRECTORY SHALL REFLECT ADDITIONS OR MODIFICATIONS TO EXISTING PANELS AND SHALL REFLECT ACTUAL "AS-BUILT" CONDITIONS.
30. VERIFY DEVICE COLOR AND MOUNTING ORIENTATION (VERTICAL OR HORIZONTAL) WITH ARCHITECTURAL AND INTERIOR DESIGN DRAWINGS PRIOR TO ORDERING ANY EQUIPMENT AND PROVIDE DEVICES AS REQUIRED. UNLESS NOTED OTHERWISE, DEVICES AND DEVICE PLATES SHALL BE WHITE IN COLOR.
31. WHERE MOTORS ARE INSTALLED IN SUSPENDED CEILINGS, CONTRACTOR SHALL PROVIDE DISCONNECT SWITCH IN SUSPENDED CEILING WITHIN REACH FROM ACCESS POINT.
32. SIZING OF MOTOR-RELATED ELECTRICAL COMPONENTS, INCLUDING FEEDER AND/ OR BRANCH CIRCUITS (WIRE AND CONDUIT) AND OVERCURRENT PROTECTION (BREAKER AND/ OR FUSES) IS BASED ON RATINGS INDICATED IN THE CONTRACT DOCUMENTS AS WELL AS NEC APPROXIMATED LOADS FOR A GIVEN MOTOR HORSEPOWER, VOLTAGE AND PHASE. IT IS THE CONTRACTOR'S RESPONSIBILITY TO VERIFY ACTUAL MOTOR AND APPLIANCE RATING AND LOADS. CONTRACTOR TO PROVIDE CORRECTLY SIZED MOTOR OVERLOAD ELECTRICAL COMPONENTS BASED ON NAMEPLATE RATING. REFLECT CHANGES IN THE AS-BUILT DRAWINGS.
33. CONTRACTOR SHALL SUBMIT SHOP DRAWINGS TO ARCHITECT FOR REVIEW OF THE FOLLOWING EQUIPMENT:
    a. ELECTRICAL SWITCHGEAR: SWITCHBOARDS, WITH PANELS, MOTOR CONTROL
    b. CENTERS AND SAFETY DEVICES.
    c. OVERCURRENT DEVICES: CIRCUIT BREAKERS AND FUSES INCLUDING
    d. TIME/CURRENT TRIP CURVES.
    e. LIGHTING FIXTURES: INDOOR/OUTDOOR AS SPECIFIED, PHOTOMETRIC
    f. PERFORMANCE DATA AND LAMPS.
    g. DEVICES: SWITCHES, RECEPTACLES, MOTOR CONTROLLERS AND
    h. DEVICE PLATES.
    i. LIFE SAFTY/FIRE ALARM SYSTEM: CONTROL PANEL, ANNUNCIATOR PANEL,
    j. INITIATION AND NOTIFICATION DEVICES/APPLIANCES, SYSTEM WIRING
    k. REQUIREMENTS AND DIAGRAM, SYSTEM LOAD CALCS, STANDARD BATTERY
    l. CALCULATIONS, AND AUXILIARY POWER SUPPLY.
34. EQUIPMENT ELECTRICAL TERMINATIONS TO UNDERGO A TORQUE TEST. ELECTRICAL CONTRACTOR IS RESPONSIBLE FOR MANUFACTURER'S RECOMMENDED TORQUE DOCUMENTATION AND TOOLS TO PERFORM TORQUE TEST.
35. UNDERGROUND SERVICE CONDUITS SHALL BE SEALED PER NEC ARTICLE 230-8.
36. FLOOR MOUNTED ELECTRICAL EQUIPMENT SHALL BE MOUNTED ON A 4" HIGH CONCRETE PAD.
37. INSTALL TRANSFORMER FOLLOWING MANUFACTURER'S RECOMMENDATIONS FOR VENTILATION CLEARANCES.
38. COORDINATE ELECTRICAL REQUIREMENTS FOR PLUMBING AND MECHANICAL EQUIPMENT WITH FINAL CONTRACTOR SELECTION. THE CONTRACTOR SHALL SIZE DISCONNECTS BASED UPON CIRCUIT BREAKER RATINGS AND PROVIDE FUSING AS REQUIRED PER EQUIPMENT MANUFACTURER RECOMMENDATIONS AND U.L. LISTING REQUIREMENTS.
39. PROVIDE 10 AWG CONDUCTORS FOR 20 AMPERE, 120V BRANCH CIRCUITS LONGER THAN 75' AND 8 AWG CONDUCTORS FOR 20 AMPERE, 120V BRANCH CIRCUITS LONGER THAN 120'. PROVIDE 10 AWG CONDUCTORS FOR 20 AMPERE, 277V BRANCH CIRCUITS LONGER THAN 200'.
40. ALL ELECTRICAL EQUIPMENT SHALL BE LABELED, LISTED, OR CERTIFIED BY A NATIONALLY RECOGNIZED TESTING LABORATORY ACCREDITED BY THE UNITED STATES OCCUPATIONAL SAFETY HEALTH ADMINISTRATION.
41. ALL NEW CIRCUIT BREAKERS INSTALLED IN PANELS SHALL MATCH THE HIGHEST EXISTING AIC RATED CIRCUIT BREAKER WITHIN THAT BOARD. INSPECTOR TO VERIFY HIGHEST AIC RATING AT THE SITE."

SINGLE LINE DIAGRAM

SYMBOL	DESCRIPTION
	CIRCUIT BREAKER
	UTILITY COMPANY SERVICE CABLE TERMINATION
	FUSE
	FUSED DISCONNECT SWITCH
	SWITCH
TVSS	TRANSIENT VOLTAGE SURGE SUPPRESSOR
	CURRENT TRANSFORMER (CT)
	POTENTIAL TRANSFORMER
	GROUNDING ELECTRODE
M	UTILITY COMPANY POWER METER
#	MOTOR (# INDICATED HP)
M	CUSTOMER OWNED POWER METER
G	GENERATOR
ST	SHUNT TRIP
GFPD	GROUND FAULT PROTECTION DEVICE
	TRANSFER SWITCH ATS OR MTS AND NUMBER OF POLES AS NOTED
	CONTACTOR (NORMALLY OPEN)
	CONTACTOR (NORMALLY CLOSED)
	TIME SWITCH
	CONTROL SWITCH
	PUSH BUTTON
T AC-1	THERMOSTAT OUTLET AT +54" (HVAC UNIT DESIGNATION)
	ENCLOSED CIRCUIT BREAKER
R	RELAY
C	CONTACTOR

ELECTRICAL SYMBOL LIST

LIGHTING

SYMBOL	DESCRIPTION
	LINEAR LED FIXTURE RECESSED MOUNT
	LINEAR LED FIXTURE SUSPENDED OR PENDANT
	LED WALL MOUNT FIXTURE
	LINEAR LED STRIP FIXTURE
	LED DOWNLIGHT RECESSED OR SURFACE
	PENDANT FIXTURE
	LED WALL MOUNTED LIGHT FIXTURE
	LED WALL SCONCE
	LED WALL WASHER
	MONO-POINT LIGHT FIXTURE
	PARKING LOT POLE MOUNTED LIGHT FIXTURE
	BOLLARD LIGHT FIXTURE
	EXIT SIGN - CEILING MOUNTED (SHADE INDICATES FACE)
	EXIT SIGN - WALL MOUNTED (SHADE INDICATES FACE)
	EXIT SIGN - W/ARROWS INDICATE DIRECTION
	EMERGENCY BUG EYE FIXTURE WITH 90 MIN BATTERY BACKUP
A 1b	LIGHTING FIXTURE NOTATION A, 1, b INDICATES: A = FIXTURE TYPE, REFER TO SCHEDULE 1 = CIRCUIT NUMBER b = SWITCH CONTROLLING FIXTURE ab =BI-LEVEL/DUAL SWITCH CONTROL
	HALF SHADED LINEAR LED OR SOLID DOWNLIGHT FIXTURE FURNISHED ON EMERGENCY POWER.
$ D,K $ abcd 2,3,4	WALL SWITCH, +48" OR AS NOTED: SUBSCRIPTS AT SYMBOL INDICATE THE FOLLOWING: 2 - DOUBLE POLE (20A, 120/277V) 3 - THREE WAY (20A, 120/277V) 4 - FOUR WAY (20A, 120/277V) D - DIMMER SWITCH (20A, 120/277V) K - KEY OPERATED (20A, 120/277V) M - MOTOR STARTING SWITCH (20A, 120/277V) P - PILOT LIGHT (20A, 120/277V) R - REMOTE CONTROL SWITCH (20A, 120/277V) T - TIMER SWITCH (0-60 MIN.) (20A, 120/277V)
OS	OCCUPANCY SENSOR - CEILING
OS	OCCUPANCY SENSOR - WALL MOUNTED
OS D	OCCUPANCY SENSOR w/DIMMER- WALL MOUNTED
LC	LIGHTING CONTACTOR
PC	PHOTOCELL
PP	LIGHTING CONTROL POWER PACK

POWER

SYMBOL	DESCRIPTION
	SINGLE RECEPTACLE, NEMA 5-15R, 20A, 125V, MOUNT CENTER OF OUTLET AT 18" AFF UON
	DUPLEX RECEPTACLE, NEMA 5-15R, 20A, 125V RATED, MOUNT CENTER OF OUTLET AT 18" AFF UON
	DEDICATED DUPLEX RECEPTACLE, NEMA 5-20R, 20A, 125V RATED MOUNT CENTER OF OUTLET AT 18" AFF UON
G	DEDICATED DUPLEX RECEPTACLE, NEMA 5-20R, 20A, 125V, GFCI TYPE, RATED MOUNT CENTER OF OUTLET AT 18" AFF UON
C	DUPLEX RECEPTACLE / HALF-SWITCHED "C" INDICATES CONTROLLED VIA MOTION SENSOR/TIME CLOCK, MOUNT CENTER OF OUTLET AT 18" AFF UON
	DUPLEX RECEPTACLE NEMA 5-15R 125V RATED MOUNTED 6" ABOVE COUNTER SPLASH
	DUPLEX RECEPTACLE NEMA 5-20R, 15A, 125V GFCI TYPE, MOUNTED 6" ABOVE COUNTER SPLASH
	QUADPLEX RECEPTACLE, NEMA 5-15R, 20A, 125V, MOUNT CENTER OF OUTLET AT 18" AFF UON
	SPECIAL RECEPTACLE 480V RATED w/GROUND AS NOTED
	SPECIAL RECEPTACLE. 250V RATED WITH GROUND AS NOTED
	DUPLEX RECEPTACLE NEMA 5-20R, 15A, 125V - FLUSH MOUNT CEILING
	DUPLEX RECEPTACLE NEMA 5-20R, 15A, 125V - FLUSH MOUNT CEILING
	POWER FLOOR OUTLET WITH DEVICE AS INDICATED
	COMBINATION POWER / DATA FLOOR OUTLET AS INDICATED
	COMBINATION POWER / DATA FLOOR OUTLET NOTED SUITABLE FOR CONCRETE FLOORS NOTED SUITABLE FOR TYPE 5 CONSTRUCTION
	COMBINATION USB/DUPLEX NEMA 5-15R, 125V, MOUNTED 18" AFF UON
	COMBINATION USB/DUPLEX NEMA 5-15R, 125V, MOUNTED 6" ABOVE COUNTER
J	JUNCTION BOX
J	JUNCTION BOX - WALL MOUNT
J	JUNCTION BOX - FLUSH FLOOR MOUNT
	DUAL CHANNEL RACEWAY WITH COVER, DUPLEX AND DATA RECEPTACLES AS NOTED
PB	PULLBOX - EXTERIOR OR INTERIOR AS INDICATED
	LIGHTING AND APPLIANCE PANELBOARD - SURFACE MOUNT
	LIGHTING AND APPLIANCE PANELBOARD - FLUSH MOUNT
	SWITCHBOARD OR DISTRIBUTION BOARD
ATS	AUTOMATIC TRANSFER SWITCH
VFD	VARIABLE FREQUENCY DRIVE
	METER SERVICE PEDESTAL
	PUSH BUTTON CONTROL STATION
$ M	SINGLE MANUAL MOTOR RATED SWITCH (1HP)
	NON-FUSED DISCONNECT SWITCH (WITH SEALTITE RACEWAY CONNECTION
F	FUSED DISCONNECT SWITCH
	MOTOR CONTROLLER OR STARTER

SIGNAL

SYMBOL	DESCRIPTION
	COMBINATION TELE/DATA OUTLET AT +18"
	TELEPHONE OUTLET AT +18"
	DATA OUTLET AT +18"
	TELE/DATA OUTLET MOUNTED 6" ABOVE COUNTER SPLASH
	TELEPHONE OUTLET MOUNTED 6" ABOVE COUNTER SPLASH
	DATA OUTLET MOUNTED 6" ABOVE COUNTER SPLASH
	TELE/DATA CEILING OUTLET
	DATA CEILING OUTLET
CR	CARD READER
S	CEILING MOUNTED SPEAKER
C	CAMERA (CCTV)
	FLUSH FLOOR BOX WITH COMBINATION TELE/DATA OUTLET
TV	TELEVISION OUTLET
TS	TIME SWITCH
T	POWER TRANSFORMER. SIZE AND TYPE NOTED ON PLANS AND SPECIFICATIONS
	TELEPHONE BACKBOARD

FIRE ALARM

SYMBOL	DESCRIPTION
FACP	FIRE ALARM CONTROL PANEL 120V
FATC	FIRE ALARM TERMINAL CABINET
ANN	FIRE ALARM ANNUNCIATOR
FS	FLOW SWITCH
TS	TAMPER SWITCH
DD	DUCT MOUNTED SMOKE DETECTOR
CSFD	COMBINATION FIRE SMOKE DAMPER
	FIRE ALARM PULL STATION
DH	ELECTROMAGNETIC DOOR HOLDER
	WALL MOUNTED FIRE ALARM HORN SPEAKER DEVICE "CD" INDICATES CANDELA; "db" INDICATES DECIBEL LEVEL
15cd 30cd 75cd	WALL MOUNTED HORN STROBE DEVICE "cd" INDICATES CANDELA; "db" INDICATES DECIBEL LEVEL
	WALL MOUNTED STROBE DEVICE "cd" INDICATES CANDELA
	CEILING MOUNTED STROBE DEVICE "CD" INDICATES CANDELA
SD	FIRE ALARM SMOKE DETECTOR DEVICE
	HEAT DETECTOR
CO	CARBON MONOXIDE DETECTOR
	FIRE ALARM BELL MOUNTED +90"A.F.F. PER NFPA72 18.4.8.1

WIRING

SYMBOL	DESCRIPTION
	CONDUIT ROUTED EXPOSED
	CONDUIT ROUTED UNDER FLOOR/UNDERGROUND
	RACEWAY CONCEALED IN WALL OR CEILING 1/2"C, 2#12 AND 1#12 GND - TYPICAL U.N.O.
	RACEWAY TURNED UP 1/2"C, 2#12 AND 1#12 GND - TYPICAL U.N.O.
	RACEWAY TURNED DOWN 1/2"C, 2#12 AND 1#12 GND - TYPICAL U.N.O.
	MIN. 3/4"C- HOMERUN TO PANELBOARD
	CONDUIT CAP-OFF

MISCELLANEOUS

SYMBOL	DESCRIPTION
UNIT #	MECHANICAL EQUIPMENT TAG
# SHEET	DIAGRAM TAG
1	KEYNOTE PLAN SYMBOL
1	DEMOLITION KEYNOTE PLAN SYMBOL
1	REVISION SYMBOL
XXX	FEEDER SCHEDULED EQUIPMENT
XXXX	ELECTRICAL EQUIPMENT TAG

APPLICABLE CODES

- 2022 CALIFORNIA ELECTRICAL CODE (CEC) PART 3, TITLE 24, CALIFORNIA CODE OF REGULATIONS (CCR)
- 2020 NATIONAL ELECTRICAL CODE (NEC) NFPA 70
- 2022 CALIFORNIA ADMINISTRATIVE CODE (CAC) PART 1, TITLE 24, CALIFORNIA CODE OF REGULATIONS (CCR)
- 2022 CALIFORNIA BUILDING CODE (CBC) PART 2, TITLE 24, CALIFORNIA CODE OF REGULATIONS (CCR)
- 2022 CALIFORNIA MECHANICAL CODE (CMC) PART 4, TITLE 24, CALIFORNIA CODE OF REGULATIONS (CCR)
- 2022 CALIFORNIA PLUMBING CODE (CPC) PART 5, TITLE 24, CALIFORNIA CODE OF REGULATIONS (CCR)
- 2022 CALIFORNIA ENERGY CODE (CEC) PART 6, TITLE 24, CALIFORNIA CODE OF REGULATIONS (CCR)
- 2022 CALIFORNIA FIRE CODE (CFC) PART 9, TITLE 24, CALIFORNIA CODE OF REGULATIONS (CCR)
- 2022 CALIFORNIA GREEN BUILDING CODE (CGBC) PART 11, TITLE 24, CALIFORNIA CODE OF REGULATIONS (CCR)

STANDARD ABBREVIATIONS

- A -
A AMPERE
AB ABOVE BACK SPLASH
ADA AMERICANS W/DISABILITIES ACT
AFF ABOVE FINISHED FLOOR
AF ARC FAULT
AHU AIR HANDLING UNIT
AMP FUSE
AFG ABOVE FINISHED GRADE
AIC AMPERE INTERRUPTING CAPACITY
AL ALUMINUM
ARCH'L ARCHITECTURAL AS AMP SWITCH
ATS AUTOMATIC TRANSFER SWITCH
AWG AMERICAN WIRE GAUGE

- B -
BC BARE COPPER
BLDG BUILDING BLDG

- C -
C CONDUIT
CAB CABINET
CAT CATALOG/CATEGORY
CB CIRCUIT BREAKER
CKT CIRCUIT
CLG CEILING
CO CONDUIT ONLY
CC COMM COMMUNICATION
CU COPPER
CTEP CALIFORNIA TYPE EVALUATION PROGRAM

- D -
DEMO,(D) DEMOLITION/DEMOLISH
DISC. DISCONNECT
DN DOWN
DWG DRAWING

- E -
EA EACH
EF EXHAUST FAN
EG EQUIPMENT GROUND
ELEC. ELECTRICAL
ELEV ELEVATOR
EM EMERGENCY
EMT ELECTRICAL METALLIC TUBING
EQUIP EQUIPMENT
(E) EXISTING TO REMAIN
EVCS ELECTRICAL VEHICLE CHARGING STATION

- F -
FACP FIRE ALARM CONTROL PANEL
FBO FURNISHED BY OTHERS
FF FINISHED FLOOR
FIXT FIXTURE
FLA FULL LOAD AMPS
FLEX FLEXIBLE METALLIC CONDUIT(STEEL)
FLUOR FLUORESCENT
FT FEET OR FOOT

- G -
GFA GROUND FAULT ALARM
GFCI GROUND FAULT CIRCUIT INTERRUPTER
GND GROUND

- H -
HP HORSEPOWER
HVAC HEATING, VENTILATING & AIR CONDITIONING

- I -
IBC INTERNATIONAL BUILDING CODE
IMC INTERMEDIATE METAL CONDUIT
IN INCH(ES)
IRC INTERNATIONAL RESIDENTIAL CODE
ISC SHORT CIRCUIT AMPERES

- J -
JB, J-BOX JUNCTION BOX

- K -
KCMIL & MCM THOUSAND CIRCULAR MILS
KVA KILOVOLT AMPERE
KW KILOWATT

- L -
LCP LIGHTING CONTROL PANEL
LRA LOCK RUNNING AMPS
LOTO LOCK OUT TAG OUT
LTG LIGHTING

- M -
MAX. MAXIMUM
MCA MAXIMUM CIRCUIT AMP
MCB MAIN CIRCUIT BREAKER
MCC MOTOR CONTROL CENTER
MECH. MECHANICAL
MIN. MINIMUM
MLO MAIN LUGS ONLY
MTD MOUNTED

- N -
NC NORMALLY CLOSED
NEC NATIONAL ELECTRICAL CODE
NECA NATIONAL ELECTRICAL CONTRACTOR'S ASSOCIATION
NEMA NATIONAL ELECTRICAL MANUFACTURERS ASSOCIATION
NEUT NEUTRAL
NFC NATIONAL FIRE CODE
NF NON-FUSIBLE
NFPA NATIONAL FIRE PROTECTION ASSOCIATION
NIC NOT IN CONTRACT
NO NORMALLY OPEN
NTS NOT TO SCALE

- O -
OCPD OVER CURRENT PROTECTION DEVICE

- P -
P POLE
PH PHASE
PNL PANEL
PV PHOTOVOLTAIC
PVC POLYVINYL CHLORIDE
PWR POWER

- Q -
QTY QUANTITY

- R -
(R) RELOCATE
RECEP RECEPTACLE
REQ'D REQUIRED
RGS RIGID GALVANIZED STEEL
RSC RIGID STEEL CONDUIT

- S -
SCHED SCHEDULE
SECP SECURITY CONTROL PANEL
SECT SECTION
SN SOLID NEUTRAL
SP SINGLE POLE
SPEC SPECIFICATION
SW SWITCH
SWBD SWITCHBOARD
SWGR SWITCH GEAR
SYS SYSTEM

- T -
TEMP TEMPORARY
TELE TELEPHONE
T-STAT THERMOSTAT
TTB TELEPHONE TERMINAL BACKBOARD
TTC TELEPHONE TERMINAL CABINET
TYP. TYPICAL

- U -
UBC UNIFORM BUILDING CODE
UL UNDERWRITERS LABORATORY
UON UNLESS OTHERWISE NOTED

- V -
V VOLT OR VOLTAGE
VA VOLT AMPERE
VD VOLTAGE DROP
VFD VARIABLE FREQUENCY DRIVE
VP VAPOR PROOF

- W -
W WATT, WIRE
WP WEATHERPROOF, NEMA 3R

- X -
XFMR TRANSFORMER

ENERGY CODE ACCEPTANCE TESTING

THE CALIFORNIA ENERGY CODE SECTION 10-103 REQUIRES ACCEPTANCE TESTING ON ALL NEWLY INSTALLED LIGHTING CONTROLS, MECHANICAL SYSTEMS, ENVELOPES, AND PROCESS EQUIPMENT AFTER INSTALLATION AND BEFORE PROJECT COMPLETION. AN ACCEPTANCE TEST IS A FUNCTIONAL PERFORMANCE TEST TO HELP ENSURE THAT NEWLY INSTALLED EQUIPMENT IS OPERATING AND IN COMPLIANCE WITH THE ENERGY CODE.

LIGHTING CONTROLS ACCEPTANCE TESTS MUST BE PERFORMED BY A CERTIFIED LIGHTING CONTROLS ACCEPTANCE TEST TECHNICIAN (ATT). CONTRACTOR TO TEST LIGHTING CONTROL DIMMING FUNCTION, AUTOMATIC OFF, MOTION SENSOR CONTROL, AND LIGHT FIXTURE FUNCTIONALITY.

MECHANICAL SYSTEM ACCEPTANCE TESTS MUST BE PERFORMED BY A CERTIFIED MECHANICAL ATT FOR PROJECTS SUBMITTED ON OR AFTER OCTOBER 1, 2021.

A LISTING OF CERTIFIED ATT CAN BE FOUND AT HTTPS://WWW.ENERGY.CA.GOV/PROGRAMS-AND-TOPICS/PROGRAMS /ACCEPTANCE-TEST-TECHNICIAN-CERTIFICATION-PROVIDER-PROGRAM/ACCEPTANCE.

THE ACCEPTANCE TESTING PROCEDURES MUST BE REPEATED, AND DEFICIENCIES MUST BE CORRECTED BY THE BUILDER OR INSTALLING CONTRACTOR UNTIL THE CONSTRUCTION / INSTALLATION OF THE SPECIFIED SYSTEMS CONFORM AND PASS THE REQUIRED ACCEPTANCE CRITERIA.

PROJECT INSPECTORS WILL BE COLLECTING THE FORMS TO CONFIRM THAT THE REQUIRED ACCEPTANCE TESTS HAVE BEEN COMPLETED.

SHEET INDEX

SHEET NUMBER	SHEET TITLE
E-01	GENERAL NOTES, ABBREVIATIONS, SYMBOLS AND SHEET INDEX
E-01.1	ELECTRICAL SHEET SPECIFICATIONS
E-02	ELECTRICAL SINGLE LINE DIAGRAM
E-02.1	ELECTRICAL SINGLE LINE DIAGRAM FOR THE WORKOUT PARK
E-03	LIGHT FIXTURE SCHEDULE
E-04	COMMUNITY CENTER LIGHTING ELECTRICAL PLANS
E-04.1	COMMUNITY CENTER POWER ELECTRICAL PLANS
E-04.2	COMMUNITY CENTER PHOTOMETRIC STUDY
E-05	OVERALL SITE PLAN
E-05.1	OVERALL SITE ELECTRICAL DEMO PLAN
E-05.2	ELECTRICAL SITE WORKOUT LIGHTING PLAN NORTH
E-05.3	ELECTRICAL SITE PLAYGROUND LIGHTING PLAN SOUTH
E-05.4	ELECTRICAL SITE LIGHTING PHOTOMETRIC STUDY
E-06	ENLARGED PUMP STATION DETAILS
E-06.1	OVERALL ELECTRICAL SITE DEMO PLAN
E-07	ELECTRICAL LIGHTING CONTROL DEVICE LAYOUT PLAN
E-07.1	ELECTRICAL LIGHTING CONTROL DETAILS
E-07.2	ELECTRICAL DETAILS
E-08	TITLE 24 COMPLIANCE INDOOR FORMS
E-08.1	TITLE 24 COMPLIANCE OUTDOOR FORMS

APPROVAL

CITY APPROVED BY:
DIRECTOR OF PUBLIC WORKS DATE
CITY REVIEWED BY:
SENIOR ENGINEER DATE
SUBMITTED BY:
DATE

CLIENT
LANCASTER
Creating a better tomorrow. Together.
CITY OF LANCASTER
44933 FERN AVENUE
LANCASTER, CA 93534

PROJECT NAME
SAMARITAN'S PURSE PARK FORMERLY KNOWN AS EL DORADO PARK RENOVATION
PWCP NO. 24-008
44501 5th STREET EAST
LANCASTER, CA 93535

ENGINEER/ARCHITECT
IDS
IDS GROUP
1 PETERS CANYON ROAD, SUITE 130
IRVINE, CA. 92606
TEL: 949-387-8500, FAX: 949-387-0800

STAMP
REGISTERED PROFESSIONAL ENGINEER
STEVEN M. COLLINS
No. E22808
Exp. 06-30-25
ELECTRICAL
STATE OF CALIFORNIA
DATE SIGNED 09-23-23

ISSUE

REV.	DESCRIPTION	DATE
	30% CD SET	12/15/23
	60% CD SET	01/19/24
	90% CD SET	02/26/24
1	CLIENT REVISION	04/26/24
2	BID SET	09/10/24
3	BULLETIN #1	10/25/24
4	BULLETIN #1 R1	2/14/25
	COMPOSITE SET	9/24/25

PROJECT IDENTIFICATION

THIS DRAWING WAS CREATED IN AUTODESK AUTOCAD V. 2021 UNLESS OTHERWISE NOTED.

THE ORIGINAL SIZE OF THIS SHEET IS 30" X 42"

THESE DRAWINGS AND SPECIFICATIONS ARE THE PROPERTY AND COPYRIGHT OF IDS GROUP AND SHALL NOT BE USED ON ANY OTHER PROJECT OR LOCATIONS EXCEPT AS DESCRIBED ON THE DRAWINGS, WITHOUT THE WRITTEN AGREEMENT WITH IDS GROUP.

IDS PROJECT NO.	22X099.01
IDS DRAWN BY	SM
IDS CHECKED BY	SM
IDS APPROVED BY	SC

SHEET TITLE
GENERAL NOTES, ABBREVIATIONS, SYMBOLS AND SHEET INDEX

SHEET NUMBER
E-01

SHEET NO. 1 OF 18

CUMULATIVE SHEET NO. OF

PROGRESS SET - NOT FOR CONSTRUCTION

ELECTRICAL SPECIFICATIONS

A. MATERIALS

1. MATERIALS SHALL BE NEW AND OF QUALITY AS SPECIFIED ON THE PLANS OR SPECIFICATIONS AND MUST CARRY THE UNDERWRITER'S LABORATORIES APPROVAL COVERING THE PURPOSE FOR WHICH THEY ARE USED, IN ADDITION TO MEETING REQUIREMENTS OF THE CURRENT APPLICABLE CODES AND REGULATIONS.

B. CONDUIT

1. ALL WIRING SHALL BE INSTALLED IN LISTED METALLIC CONDUIT EXCEPT AS PERMITTED BELOW. RGS, WITH A 20 MIL PVC COATING WILL BE USED WHEN IN CONTACT WITH EARTH. IMC MAY BE USED IN INDOOR LOCATIONS NOT IN CONTACT WITH THE EARTH. EMT MAY BE USED IN INDOOR LOCATIONS NOT IN CONTACT WITH EARTH, NOT IN CONCRETE SLABS OR WALLS AND NOT SUBJECT TO DAMAGE. PVC MAY BE USED IN OR BELOW CONCRETE AND DIRECT BURIED IN EARTH. FLEXIBLE STEEL CONDUIT SHALL BE USED FOR INDOOR FINAL CONNECTIONS TO EQUIPMENT IN LENGTHS NOT TO EXCEED 72". LIQUID-TIGHT FLEXIBLE STEEL CONDUIT SHALL BE FOR OUTDOOR FINAL CONNECTIONS TO EQUIPMENT NOT TO EXCEED 36".

2. WHERE CONDUIT ENTERS OUTLET BOXES, FIXTURES OR CABINETS, FIRMLY FASTEN WITH STEEL SET SCREW, COMPRESSION CONNECTORS, OR DOUBLE LOCKNUTS FOR GRC. CONNECTIONS SHALL HAVE BUSHINGS OR INSULATED THROAT CONNECTORS. FIRMLY FASTEN CONDUIT TO THE BUILDING CONSTRUCTION. RUN EXPOSED CONDUIT PARALLEL TO THE BUILDING LINES, SUPPORTED BY APPROPRIATE HANGERS (UNISTRUT, T & B OR APPLETON, OR EQUAL).

3. COVER METALLIC CONDUIT IN CONTACT WITH EARTH WITH POLYETHYLENE TAPED SPIRAL WRAPPED, 1/2 LAPPED TO PROVIDE 20 MIL. THICKNESS. TAPE SHALL BE SCOTCH NO. 50 TAPE. CONDUIT AND DUCTS NOT UNDER BUILDINGS AND FEEDER DUCTS SHALL BE INSTALLED PER N.E.C. 300-5. MAKE JOINTS WITH COMPOUND TO BE WATERTIGHT.

4. FITTINGS AND CONDUIT BODIES SHALL BE STEEL. NO DIECAST FITTINGS.

5. CONDUIT SIZES SHALL BE AS REQUIRED BY CODE AND AS INDICATED OR SPECIFIED.

6. EMPTY CONDUIT SYSTEMS SHALL HAVE A NYLON PULL STRING TO FACILITATE INSTALLATION OF FUTURE WIRE.

7. SCHEDULE 40 PVC CONDUIT SHALL BE PERMITTED UNDERGROUND WITH PROPER FITTINGS, UL APPROVED AND CEMENTED JOINTS. PENETRATIONS THROUGH FLOOR SLABS AND BENDS GREATER THAN 22° SHALL BE WRAPPED RIGID GALVANIZED STEEL ELBOWS.

8. CONDUITS AND OUTLETS SHALL BE CONCEALED WITH THE BUILDING STRUCTURE, EXCEPT THAT CERTAIN MOTOR AND LIGHTING FEEDER CONDUITS MAY BE RUN EXPOSED IN CERTAIN AREAS AS INDICATED ON THE DRAWINGS. CONDUIT SHOWN TO BE INSTALLED IN CABINETS, COUNTERS, AND CASEWORK SHALL BE RUN AS DIRECTED BY THE ARCHITECT.

9. CONDUIT SYSTEMS SHALL HAVE A CODE SIZED COPPER GROUND CONDUCTOR INCREASE CONDUIT SIZE AS REQUIRED.

10. CONDUIT PENETRATION THROUGH ROOF SHALL HAVE ROOF FLASHING WITH CAULK TYPE COUNTER FLASHING SLEEVE. INSTALLATION SHALL BE WATERTIGHT.

11. CONDUITS SHALL BE ROUTED SURFACE ON THE STRUCTURE, PARALLEL AND PERPENDICULAR TO THE STRUCTURE.

C. OUTLET, PULL, AND JUNCTION BOXES

1. EACH SWITCH, LIGHT. RECEPTACLE OR OTHER OUTLET SHALL BE PROVIDED WITH A CODE GAUGE, GALVANIZED STEEL OUTLET BOX. JUNCTION AND PULL BOXES SHALL BE CODE GAUGE, GALVANIZED STEEL. OUTLET BOXES SHALL BE OF THE ONE PIECE, KNOCKOUT TYPE. IN GENERAL 4" SQUARE WITH PLASTER RING. PLASTER RINGS SHALL BE SET TO PROVIDE NOT MORE THAN 1/8" FROM WALL SURFACE TO RING. IN NO CASE SHALL PLASTER RING PROJECT BEYOND SURFACE OF WALL. SINGLE GANG RINGS SIMILAR TO STEEL CITY S2050 SHALL BE USED FOR 4" BOXES IN UNFINISHED BRICK NUMBER 180 BOXES MAY BE USED FOR UNFINISHED MASONRY FLUSH WALL OUTLETS. CENTER OUTLET BOXES IN BLOCK COURSE.

2. BOXES INSTALLED IN POURED CEMENT FLOORS SHALL BE FLUSH TYPE CAST IRON OR STEEL WITH WATERTIGHT GASKETED COVERS. WHERE BOXES ARE INSTALLED IN FLOORS WITH TILE OR CARPET FLOOR COVERING, COVERS SHALL BE OF THE RECESSED TYPE TO ACCOMMODATE THE FLOOR COVERING.

3. BOXES INSTALLED FOR THE ALARM, COMPUTER, AND SECURITY SYSTEM SHALL BE PROVIDED WITH APPROPRIATE COVER PLATES.

4. BOXES FOR TELEPHONE, COMPUTER, T.V., FIRE ALARM, SECURITY, AND SIMILAR SYSTEMS SHALL BE MINIMUM 4" SQUARE AND 2-1/8" DEEP.

D. SWITCHBOARDS

1. SWITCHBOARDS SHALL BE PROVIDED WITH FULLY RATED COPPER OR ALUMINUM BUS. HORIZONTAL TAPERED BUSSING SHALL NOT BE ALLOWED.

2. ACCEPTABLE MANUFACTURERS - CUTLER HAMMER, SEIMENS, SQUARE D OR APPROVED EQUAL.

3. FACTORY ASSEMBLED DEAD FRONT, METAL ENCLOSED, AND SELF-SUPPORTING SWITCHBOARD ASSEMBLY CONFORMING TO NEMA PB 2, AND UL 891, AND COMPLETE FROM INCOMING LINE TERMINALS TO LOAD SIDE TERMINATIONS.

4. LINE AND LOAD TERMINATIONS: ACCESSIBLE FROM THE FRONT ONLY OF THE SWITCHBOARD. SUITABLE FOR THE CONDUCTOR MATERIALS AND NUMBER OF CONDUCTORS USED.

5. BUS CONNECTIONS: BOLTED. ACCESSIBLE FROM FRONT FOR MAINTENANCE. PROVIDE BELLEVILLE WASHERS FOR AND PROPERLY TORQUE CONNECTIONS.

6. PROVIDE FULLY-RATED NEUTRAL BUS AND FULLY RATED GROUND BUS MATCHING MATERIAL USED FOR MAIN BUS.

7. FUTURE PROVISIONS: FULLY EQUIP SPACES FOR FUTURE DEVICES WITH BUSSING AND BUS CONNECTIONS. SUITABLY INSULATED AND BRACED FOR SHORT CIRCUIT CURRENTS. CONTINUOUS CURRENT RATING AS INDICATED ON DRAWINGS.

E. PANEL BOARDS

1. CIRCUIT BREAKER TYPE AS INDICATED ON DRAWINGS. UNLESS INDICATED OTHERWISE, PANELS SHALL HAVE PANEL BOARD TYPE CONSTRUCTION WITH BOLT-ON CIRCUIT BREAKERS FOR 30 PANELS. MANUFACTURERS SHALL BE GENERAL ELECTRIC, SQUARE D, SIEMENS, CUTLER-HAMMER OR EQUAL WITH VOLTAGE, SIZES, AND RATINGS AS INDICATED ON DRAWINGS.

2. THE CIRCUIT BREAKERS SHALL BE OPERABLE IN ANY POSITION AND BE REMOVABLE FROM THE FRONT OF THE PANEL BOARD WITHOUT DISTURBING THE ADJACENT UNITS. BRANCH BREAKERS SHALL BE OF SUCH DESIGN THAT COMBINATION OF SINGLE-POLE, DOUBLE-POLE, AND THREE-POLE BREAKERS CAN BE ASSEMBLED ON THE SAME PANEL. EACH BRANCH CIRCUIT SHALL BE CLEARLY NUMBERED. BRANCH AND MAIN TERMINALS SHALL BE OF THE SOLDERLESS TYPE. HANDLE TIES TO FORM MULTI-POLE BREAKERS NOT ACCEPTABLE.

3. WIRE TERMINATION FOR PANEL BOARDS AND CIRCUIT BREAKERS SHALL BE LISTED AS SUITABLE FOR 75 DEGREES C.

4. PROVIDE A TYPEWRITTEN CIRCUIT INDEX BEHIND CLEAR PLASTIC COVER ON INSIDE OF DOOR. INFORMATION SHALL INCLUDE ROOM AND TYPE LOAD SERVED. CIRCUIT BREAKERS SHALL BE IDENTIFIED, INCLUDING SPARES. INDEX CARD FRAME SHALL BE METAL, SECURED TO DOOR.

5. WHERE PANEL BOARDS ARE INSTALLED FLUSH WITH THE WALLS, EXTEND EMPTY CONDUITS FORM THE PANEL BOARD TO AN ACCESSIBLE SPACE ABOVE OR BELOW. PROVIDE 3/4" (MINIMUM SIZE) CONDUIT FOR EVERY THREE SINGLE SPARE CIRCUIT BREAKERS OR SPACE OR EQUIVALENT MULTI-POLE ARRANGEMENT, OR FRACTION THEREOF, BUT NOT LESS THAN TWO CONDUITS FOR EACH PANEL.

6. PANEL BOARDS TO BE PROVIDED WITH COPPER BUSSING ONLY.

7. LOAD CENTERS SHALL NOT BE ALLOWED UNLESS NOTED OTHERWISE.

8. NEW PANELBOARDS SHALL COMPLY WITH NEC ARTICLE 110.16. EQUIPMENT MANUFACTURERS SHALL PROVIDE WARNING LABELS FOR PANELBOARDS, GENERATORS, AUTOMATIC TRANSFER SWITCHES TO WARN QUALIFIED PERSONS OF POTENTIAL ELECTRIC ARC FLASH HAZARDS. THE MARKING SHALL BE LOCATED SO AS TO BE CLEARLY VISIBLE TO QUALIFIED PERSONS BEFORE EXAMINATION, ADJUSTMENT, SERVICE, OR MAINTENANCE OF THE EQUIPMENT.

F. WIRE

1. CONDUCTOR SIZES SHOWN ON THE DRAWINGS ARE BASED ON COPPER WIRE. UNLESS OTHERWISE SPECIFIED, WIRE SHALL BE TYPE XHHW FOR FEEDERS OR BRANCH CIRCUITS LARGER THAN 4 AWG, TYPE THHN/THWN INSULATION FOR FEEDERS AND BRANCH CIRCUITS 4 AWG AND SMALLER. BRANCH CIRCUIT WIRING SHALL BE COPPER. SERVICE AND PANEL FEEDERS #1/0 AND LARGER MAY BE ALUMINUM, PROVIDED THE CONDUCTOR SIZES ARE INCREASED FOR EQUAL OR GREATER AMPACITY AND EQUAL OR LESS EQUIVALENT VOLTAGE DROP. INCREASE CONDUIT SIZE AS REQUIRED. THE WIRES SHALL BE MARKED WITH COLOR TO SIMPLIFY CIRCUIT IDENTIFICATION. UNLESS OTHERWISE REQUIRED BY LOCAL ORDINANCES GROUND WIRES SHALL BE GREEN, NEUTRAL WIRES SHALL BE 120V- WHITE, 277V- GRAY, AND LIVE WIRES 208Y/120V AND 120/240 SHALL BE BLACK (PHASE A), RED (PHASE B), AND BLUE (PHASE C). FOR 480Y/277V CIRCUITS, THE COLOR CODE SHALL BE BROWN (PHASE A), ORANGE (PHASE B), AND YELLOW (PHASE C). THE WIRE SHALL BE 12 AWG UNLESS OTHERWISE INDICATED. CIRCUIT SHALL BE LABELED IN EACH J-BOX.

2. WHERE ALUMINUM WIRE IS USED, ALUMINUM CONDUCTOR MATERIAL SHALL COMPLY WITH N.E.C. 310-14 AND CONNECTIONS AND TERMINATIONS SHALL BE MACHINE COMPRESSION TYPE EQUAL TO BURNDY "HI PLUG" OR "MACADAPT", NO EXCEPTIONS.

3. NO WIRE SHALL BE INSTALLED IN THE CONDUIT SYSTEM UNTIL THE CONDUIT SYSTEM IS COMPLETE. USE MINERALAC NO. 100 OR EQUIVALENT AS A LUBRICANT TO FACILITATE THE INSTALLATION OF THE CONDUCTORS IN THE CONDUIT SYSTEM.

4. SPLICES IN EXTERIOR PULL BOXES AND MANHOLES SHALL BE WEATHERPROOF USING "SCOTCHCAST" SPLICE KIT OR APPROVED EQUAL. SEAL ENDS OF CONDUITS AND DUCTS WITH "DUCTSEAL" OR APPROVED EQUAL.

5. PROVIDE SOLID CONDUCTOR FOR 12 AWG AND SMALLER.

G. WIRING DEVICES

1. WALL SWITCHES SHALL BE SPECIFICATION GRADE AC SILENT TYPE SWITCHES, 20A, 120/277 VOLT.

2. RECEPTACLES SHALL BE SPECIFICATION GRADE, DUPLEX TYPE, NEMA 5-20R, 20 AMPERE, 120 VOLT GROUNDED TYPE. SPECIAL APPLICATION RECEPTACLES SHALL BE INDICATED ON PLANS. MOUNT WITH THE GROUND DOWN.

3. DEVICE PLATES SHALL BE EQUAL TO SIERRA SMOOTH-LINE PLASTIC WALL PLATES. COLOR SHALL BE WHITE, UNLESS OTHERWISE NOTED.

4. RECEPTACLES IN OUTDOOR AND WET LOCATIONS SHALL BE INSTALLED WITH A HINGED OUTLET COVER/ENCLOSURE CLEARLY MARKED AND U.L. LISTED SUITABLE FOR WET LOCATIONS WHILE IN USE, EQUAL TO TAYMAC SPECIFICATION GRADE.

H. LIGHTING FIXTURES

1. PROVIDE ALL LIGHTING FIXTURES, WIRED AND CONNECTED. THE DRAWINGS INDICATE THE FIXTURES FOR EACH LOCATION. PROVIDE LAMPS FOR FIXTURES. THE LAMPS SHALL BE BY THE SAME MANUFACTURER. VERIFY CEILING CONSTRUCTION BEFORE ORDERING RECESSED UNITS. PROVIDE PLASTER FRAMES AND HANGERS AS REQUIRED. CEILING CONSTRUCTION, ARCHITECTURAL ACCESSORIES, VOLTAGE, AND BALLASTS TO MEET THE EXISTING CONDITION.

I. SERVICE ENTRANCE SECTION

1. THE SERVICE ENTRANCE EQUIPMENT SHALL BE AS INDICATED ON THE DRAWINGS. EQUIPMENT SHALL CARRY THE U.L. LABEL AND SHALL CONFORM TO THE POWER COMPANY REGULATIONS.

2. SERVICE ENTRANCE EQUIPMENT SHALL BE PROVIDED WITH A FULLY RATED COPPER OR ALUMINUM BUS. HORIZONTALLY TAPERED BUSSING SHALL NOT BE ALLOWED.

J. SYSTEM GROUNDING

1. GROUNDING SHALL COMPLY WITH REQUIREMENTS OF ARTICLE 250. EXPOSED NONCURRENT CARRYING METALLIC PARTS OF ELECTRICAL EQUIPMENT, METALLIC RACEWAY SYSTEMS, METALLIC CABLE ARMOR, GROUNDING CONDUCTOR OF NONMETALLIC SHEATHED CABLES, GROUNDING CONDUCTOR IN NONMETALLIC RACEWAYS, AND GROUNDED CONDUCTORS OF THE WIRING SYSTEM SHALL BE GROUNDED.

2. GROUNDING CONDUCTOR (NEUTRAL) OF THE WIRING SYSTEM SHALL BE CONNECTED TO THE SYSTEM GROUNDING CONDUCTOR AT A SINGLE PLACE IN EACH SYSTEM BY REMOVABLE BONDING JUMPERS, SIZED ACCORDING TO THE APPLICABLE PROVISIONS OF THE NATIONAL ELECTRICAL CODE. THE GROUNDED CONDUCTOR (NEUTRAL) TO THE GROUNDING CONDUCTOR CONNECTION SHALL BE LOCATED IN THE ENCLOSURE FOR THE SYSTEM'S OVERCURRENT PROTECTION OR WHERE OTHERWISE INDICATED ON THE PLANS OR SPECIFICATIONS.

3. A GROUND BUS SEPARATE FROM THE NEUTRAL BUS SHALL BE PROVIDED IN ALL SWITCHBOARDS AND PANELBOARDS. GROUND BUS SHALL BE RETOROUED (CHECKED) PRIOR TO ENERGIZING EQUIPMENT PER MANUFACTURER'S RECOMMENDATIONS.

4. GROUND BUSES AND NEUTRAL BUSES IN DISTRIBUTION PANELS, SWITCHBOARDS, PANELBOARDS, AND THOSE PROVIDED IN ANY EQUIPMENT SHALL BE ISOLATED EXCEPT WHERE REQUIRED TO BE CONNECTED AS SPECIFIED ABOVE FOR THE SERVICE ENTRANCE AND IN TRANSFORMER TERMINAL COMPARTMENTS.

5. WHEN INDICATED ON THE DRAWINGS, EQUIPMENT GROUNDING CONDUCTORS SHALL BE EXTENDED FROM THE GROUND BUS IN THE DISTRIBUTION EQUIPMENT TO THE RECEPTACLE, FIXTURE OR DEVICE LUGS WHERE THEY ARE PROVIDED. WHERE LUGS ARE NOT PROVIDED, EQUIPMENT GROUNDING CONDUCTORS SHALL BE CONNECTED TO EQUIPMENT ENCLOSURES. THE CONNECTIONS SHALL BE ARRANGED SUCH THAT REMOVAL OF THE RECEPTACLE, EQUIPMENT GROUND CONDUCTORS, OR GROUND JUMPERS FROM GROUND BUSING SHALL NOT AFFECT THE GROUND SYSTEM.

6. RACEWAYS MAY NOT BE USED AS A GROUNDING CONDUCTOR FOR POWER AND LIGHTING CIRCUITS. CONDUIT SHALL HAVE SEPARATE CODE SIZED GREEN GROUND WIRE INSTALLED IN THE CONDUIT TO INSURE A CONTINUOUS GROUNDING PATH.

7. IN INACCESSIBLE LOCATIONS, MAKE CONNECTIONS BY EXOTHERMIC WELD PROCESS.

8. IN ACCESSIBLE LOCATIONS, CONNECTIONS SHALL BE MADE WITH BOLTED THROUGH, APPROVED SOLDERLESS BRONZE GROUNDING DEVICES.

9. BOND TOGETHER METAL SIDING NOT ATTACHED TO GROUNDED STRUCTURE BOND TO GROUND.

K. TELEPHONE SYSTEM

1. TELEPHONE WALL OUTLETS SHALL CONSIST OF STANDARD BOXES MOUNTED 18" ABOVE THE FLOOR UNLESS OTHERWISE INDICATED. CONNECT OUTLETS TO TELEPHONE TERMINAL WITH SEPARATE 3/4" CONDUIT UNLESS OTHERWISE SHOWN ON DRAWINGS. PROVIDE A TERMINAL MOUNTING BOARD FOR THE INCOMING SERVICE CABLE.

L. LIGHTING CONTROL

1. FURNISH AND INSTALL TIME SWITCHES, PHOTOCELLS, CONTACTORS AND FULL LIGHTING CONTROL SYSTEMS AS REQUIRED FOR LIGHTING CONTROLS INDICATED ON THE DRAWINGS.

2. TIME SWITCHES SHALL BE EQUAL TO PARAGON, GENERAL ELECTRIC, TORK, OR INTERMATIC AND SHALL HAVE SIZE AND NUMBER OF POLES AS REQUIRED.

3. PHOTOCELLS SHALL BE EQUAL TO TORK OR INTERMATIC WITH VOLTAGE AS INDICATED.

M. LIGHTING INVERTER SYSTEM

1. LIGHTING INVERTERS SHALL HAVE A CENTRAL BATTERY AS EMERGENCY POWER SOURCE FOR EGRESS LIGHTING WITH SIZE AND VOLTAGE AS INDICATED ON THE DRAWINGS.

2. ACCEPTABLE MANUFACTURES - DUAL-LITE, HUBBELL LIGHTING, LITHONIA LIGHTING EMERGENCY LIGHTING SYSTEMS, MCPHILBEN EMERGENCY LIGHTING OR APPROVED EQUAL.

3. UNIT SHALL AUTOMATICALLY SENSE LOSS OF NORMAL AC SUPPLY AND USE A SOLID-STATE SWITCH TO TRANSFER LOADS. TRANSFER IN 0.004 SECOND OR LESS FROM NORMAL SUPPLY TO BATTERY-INVERTER SUPPLY. INVERTER SHALL BE COMPATIBLE WITH INCANDESCENT, MAGNETIC AND ELECTRONIC FLUORESCENT BALLASTS, HIGH POWER FACTOR COMPACT FLUORESCENT, AND HIGH INTENSITY DISCHARGE (H.I.D) LAMP TYPES.

4. UNIT SHALL SUPPLY POWER TO OUTPUT CIRCUIT(S) FROM A SINGLE, EXTERNAL, NORMAL SUPPLY SOURCE. UNIT AUTOMATICALLY TRANSFERS LOAD FROM NORMAL SOURCE TO INTERNAL BATTERY/INVERTER SOURCE. RETRANSFER TO NORMAL IS AUTOMATIC WHEN NORMAL POWER IS RESTORED.

5. UNIT SHALL COMPLY WITH NFPA 70 AND NFPA 101. AND BE UL 924 LISTED.

6. UNIT SHALL SUSTAIN A FULL-CAPACITY OUTPUT FOR A MINIMUM OF 90 MINUTES. PROVIDE BATTERIES THAT ARE MAINTENANCE FREE, SEALED LEAD CALCIUM BATTERY WITH AN EXPECTED LIFE OF NO LESS THAN 10 YEARS.

7. UNIT SHALL CONTAIN GROUP DISPLAYS, INDICATIONS, AND BASIC SYSTEM CONTROLS ON COMMON CONTROL PANEL ON FRONT OF CENTRAL BATTERY INVERTER ENCLOSURE.

8. ENCLOSURE SHALL BE STEEL, WITH HINGED LOCKABLE DOORS, SUITABLE FOR FLOOR MOUNTING. MANUFACTURER'S STANDARD CORROSION-RESISTANT FINISH.

N. DRY TYPE TRANSFORMERS

1. MANUFACTURERS: SUBJECT TO COMPLIANCE WITH REQUIREMENTS, PROVIDE PRODUCTS BY ONE OF THE FOLLOWING

a. ACME ELECTRIC CORPORATION; POWER DISTRIBUTION PRODUCTS DIVISION.
b. GE ELECTRICAL DISTRIBUTION & CONTROL.
c. CUTLER-HAMMER.
d. SQUARE D/GROUPE SCHNEIDER NA.

2. CONTINUOUS WINDINGS WITHOUT SPLICES, EXCEPT FOR TAPS.

a. INTERNAL COIL CONNECTIONS - BRAZED OR PRESSURE TYPE.
b. COIL MATERIAL - COPPER

3. ENCLOSURE - VENTILATED, NEMA 250, TYPE 2 (NEMA 3R FOR OUTDOOR INSTALLATIONS).

4. INSULATION CLASS - 220 DEG C, UL-COMPONENT-RECOGNIZED INSULATION SYSTEM WITH A MAXIMUM OF 150 DEG C RISE ABOVE 40 DEG C AMBIENT TEMPERATURE.

5. TAPS FOR TRANSFORMERS 25 KVA AND LARGER - TWO 2.5 PERCENT TAPS ABOVE AND FOUR 2.5 PERCENT TAPS BELOW NORMAL FULL CAPACITY.

6. WALL BRACKETS - MANUFACTURER'S STANDARD BRACKETS.

7. LOW-SOUND-LEVEL-REQUIREMENTS - MINIMUM OF 3 DBA LESS THAN NEMA ST 20 STANDARD SOUND LEVELS WHEN FACTORY TESTED ACCORDING TO IEEE C57.12.91.

O. GUARANTEE

8. GUARANTEE MATERIAL FURNISHED AND WORKMANSHIP PERFORMED FOR A PERIOD OF ONE YEAR FROM DATE OF FINAL ACCEPTANCE OF WORK. ANY DEFECTS DEVELOPING WITHIN THIS PERIOD, TRACEABLE TO MATERIAL FURNISHED AS A PART OF THIS SECTION OR WORKMANSHIP PERFORMED HEREUNDER, SHALL BE MADE GOOD AT NO EXPENSE TO THE OWNER.

P. SHOP DRAWINGS AND APPROVALS

1. THE ITEMS SPECIFIED HEREIN AND ON DRAWINGS ARE USED AS A STANDARD OF QUALITY. ANY MATERIALS OF EQUAL QUALITY AND AESTHETIC VALUE WILL BE GIVEN CONSIDERATION AS A SUBSTITUTE FOR THE MATERIALS SPECIFIED. NO APPROVAL WILL BE GIVEN TO A SPECIFIC CATALOG NUMBER, MODEL, OR TYPE OF EQUIPMENT, PRIOR TO BIDDING. AFTER BIDDING, THE DECISION OF THE ARCHITECT AND/OR ENGINEER DETERMINING EQUAL MATERIALS WILL BE FINAL.

2. THE CONTRACTOR SHALL SUBMIT SEVEN (7) IDENTICAL BOUND SETS OF SHOP DRAWINGS ON THE FOLLOWING ITEMS:

o. LIGHTING FIXTURE CUTS AND PERFORMANCE DATA.
p. OUTLINE DRAWINGS AND DATA SHEETS OF EACH PANELBOARD AND SWITCHBOARD.
q. OUTLINE DRAWINGS OF ALL SWITCHGEAR.

3. SUBMIT ITEMS AT ONE TIME IN A NEAT AND ORDERLY MANNER WITHIN 15 DAYS OF AWARD OF CONTRACT. PARTIAL SUBMITTALS WILL NOT BE ACCEPTABLE.

Q. RECORD AND AS-BUILT DRAWINGS

1. THE ELECTRICAL CONTRACTOR SHALL MAINTAIN A SET OF DRAWINGS AT THE JOB SITE FOR THE EXCLUSIVE PURPOSE OF MAINTAINING A RECORD OF WORK INSTALLED AND TO SHOW ANY DEVIATIONS FROM THE WORK INDICATED ON THE DRAWINGS.

2. AT THE COMPLETION OF THE PROJECT, ONE SET OF REPRODUCIBLE DRAWINGS, SHOWING AS-BUILT CONDITIONS, SHALL BE DELIVERED TO THE OWNER FOR ACCEPTANCE PRIOR TO FINAL PAYMENT.

R. COORDINATION STUDY & ARC FLASH REQUIREMENTS

1. THE ELECTRICAL CONTRACTOR MUST HIRE AN INDEPENDANT THIRD PARTY TO PERFORM A COORDINATION STUDY OF THE ENTIRE ELECTRICAL SYSTEM. THE COORDINATION STUDY SHALL BE PERFORMED AFTER THE ENGINEER HAS APPROVED THE SHOP DRAWINGS AND A MANUFACTURE HAS BEEN SELECTED. THE STUDY MUST BE PRESENTED TO THE ENGINEER AND OWNER FOR REVIEW TO ENSURE THE ENTIRE ELECTRICAL SYSTEM IS PROPERLY COORDINATED.

2. ARC FLASH REQUIREMENTS:

a. PROVIDE AN ARC FLASH EVALUATION FOR THE NEW ELECTRICAL EQUIPMENT. PERFORM ALL CALCULATIONS AND WORK WITH COMMERCIALLY AVAILIBLE COMPUTER SOFTWARE IN ACCORDANCE WITH IEEE STD. 1584-2002 IEEE GUIDE FOR PERFORMING ARC-FLASH HAZARD CALCULATIONS, NFPA 70-2009 (NEC), AND NFPA 70E-2009 STANDARD FOR ELECTRICAL SAFETY IN THE WORKPLACE.
b. WHERE THE CALCULATIONS DETERMINE THAT THE SETTINGS RESULT IN PROHIBITIVE INCIDENT ENERGY LEVELS (>40 CAL/CM2) THE CONTRACTOR SHALL PROVIDE RECOMMENDED SETTINGS OR OTHER MITIGATION RECOMMENDATIONS TO REDUCE THE INCIDENT ENERGY TO A LEVEL WHERE ENERGIZED WORK IS CAPABLE OF BEING PERFORMED. THE CONTRACTOR SHALL DOCUMENT THE RECOMMENDED CHANGES AND PROVIDED TIME CURRENT CURVES INDICATING THE COORDINATION THAT REFLECTS THE RECOMMENDED SETTINGS.
c. PROVIDE LABELS FOR EACH ELECTRICAL ENCLOSURE OR EQUIPMENT WHERE WORKERS COULD BE EXPOSED TO ENERGIZED CONDUCTORS. THESE LABELS SHALL COMPLY WITH THE REQUIREMENTS OF NFPA 70E-2009 AND INCLUDE BUT NOT LIMITED TO:

1. VOLTAGE PHASE TO PHASE
2. FLASH PROTECTION BOUNDARY (INCHES)
3. INCIDENT ENERGY AT THE WORKING DISTANCE(CAL/CM2)
4. PPE CLASS AND DESCRIPTION (INCLUDING GLOVE RATING)
5. RESTRICTED APPROACH BOUNDARY (INCHES)
6. LIMITED SHOCK PPROACH BOUNDARY (INCHES)
7. PROHIBITED SHOCK APPROACH BOUNDARY (INCHES)
8. LOCATION IDENTIFICATION

APPROVAL

CITY APPROVED BY:

DIRECTOR OF PUBLIC WORKS DATE

CITY REVIEWED BY:

SENIOR ENGINEER DATE

SUBMITTED BY:

DATE

CLIENT

LANCASTER
Creating a better tomorrow. Together.

CITY OF LANCASTER

44933 FERN AVENUE
LANCASTER, CA 93534

PROJECT NAME

SAMARITAN'S PURSE PARK FORMERLY KNOWN AS EL DORADO PARK RENOVATION

PWCP NO. 24-008

44501 5th STREET EAST
LANCASTER, CA 93535

ENGINEER/ARCHITECT

IDS

IDS GROUP

1 PETERS CANYON ROAD, SUITE 130
IRVINE, CA. 92606
TEL: 949-387-8500, FAX: 949-387-0800

STAMP

REGISTERED PROFESSIONAL ENGINEER
PETER W. COLLINS
No. E22808
Exp. 06-30-24
ELECTRICAL
STATE OF CALIFORNIA

DATE SIGNED 09-23-23

ISSUE

REV.	DESCRIPTION	DATE
	30% CD SET	12/15/23
	60% CD SET	01/19/24
	90% CD SET	02/26/24
1	CLIENT REVISION	04/26/24
2	BID SET	09/10/24
3	BULLETIN #1	10/25/24
4	BULLETIN #1 R1	2/14/25
	COMPOSITE SET	9/24/25

PROJECT IDENTIFICATION

THIS DRAWING WAS CREATED IN AUTODESK AUTOCAD V. 2021 UNLESS OTHERWISE NOTED.

THE ORIGINAL SIZE OF THIS SHEET IS 30" X 42"

THESE DRAWINGS AND SPECIFICATIONS ARE THE PROPERTY AND COPYRIGHT OF IDS GROUP AND SHALL NOT BE USED ON ANY OTHER PROJECT OR LOCATIONS EXCEPT AS DESCRIBED ON THE DRAWINGS, WITHOUT THE WRITTEN AGREEMENT WITH IDS GROUP.

IDS PROJECT NO.	22X099.01
IDS DRAWN BY	SM
IDS CHECKED BY	SM
IDS APPROVED BY	SC

SHEET TITLE

ELECTRICAL SHEET SPECIFICATIONS

SHEET NUMBER

E-01.1

SHEET NO. 2 OF 18

CUMULATIVE SHEET NO. XXX OF XXX

PROGRESS SET - NOT FOR CONSTRUCTION

IDS GROUP - FILE LOCATION: S:\PROJECTS\2022\SHARED\22X099.01 LANC - EL DORADO PARK\05 CAD\05 ELEC\2023-12-05-EXISTING CC FILES\E-01_E-01.1_SHEET 01_02 GEN SHEET PLOT DATE: 12/5/2024 7:23:24 PM USER: MICHAEL.REED

N.E.C. GROUNDING NOTES

(***) COMMUNICATIONS GROUND CONDUCTOR SHALL BE SIZED BASED ON DISTANCE BETWEEN TELECOMMUNICATIONS ROOM AND SYSTEM GROUNDED BUS BAR AS FOLLOWS:

0-200 FT.	#1/0
OVER 200 FT.	#3/0

(**) MAIN BONDING JUMPER SHALL BE SIZED AS FOLLOWS:

SERVICE SIZE	M.B.J. SIZE
0-1,000A	#3/0
1,200A	#4/0
1,600A	250KCMIL
2,000A	300KCMIL
2,500A	500KCMIL
3,000A	500KCMIL
4,000A	600KCMIL

(*) GROUNDING ELECTRODE CONDUCTOR SHALL BE SIZED AS FOLLOWS:

SERVICE SIZE	G.E.C. SIZE
0-200A	#4
201-400A	#1/0
OVER 400A	#3/0

NOTES:

1. THE ELECTRICAL CONTRACTOR SHALL PROVIDE A GROUNDING ELECTRODE SYSTEM IN ACCORDANCE WITH NEC 250.52(A)(1) THROUGH (A)(6).
2. IF NONE OF THESE SYSTEMS ARE AVAILABLE, THEN THE ELECTRODES SPECIFIED IN NEC 250.52(A)(4) THROUGH (A)(7) SHALL BE PROVIDED.

POTENTIAL ELECTRICAL ARC FLASH HAZARD NOTE

1. ALL ELECTRICAL PANELS, MOTOR CONTROL CENTERS AND SWITCHBOARDS REQUIRING EXAMINATION OR SERVICING WHILE ENERGIZED SHALL BE FILED-MARKED TO WARN QUALIFIED PERSONS OF POTENTIAL ELECTRICAL ARC FLASH HAZARDS. SUCH MARKING SHALL BE LOCATED SO AS TO BE CLEARLY VISIBLE TO QUALIFIED PERSONS BEFORE EXAMINATION, ADJUSTMENT, SERVICING OR MAINTENANCE. 2019 CALIFORNIA ELECTRICAL CODE CEC 110.16.

SERIES RATING NOTE

1. IF SERIES RATING IS INDICATED, THEN THERE SHALL BE A U.L. LISTED SERIES RATING BETWEEN THE LINESIDE CIRCUIT BREAKERS AT THE SERVICE ENTRANCE EQUIPMENT DISTRIBUTION SECTION AND DOWNSTREAM CIRCUIT BREAKERS AT PANELS BASED ON THE CALCULATED AVAILABLE FAULT CURRENT SUBMITTED BY THE UTILITY POWER COMPANY (INCLUDING MOTOR CONTRIBUTION) AT THE LINESIDE OF THE CIRCUIT BREAKERS.

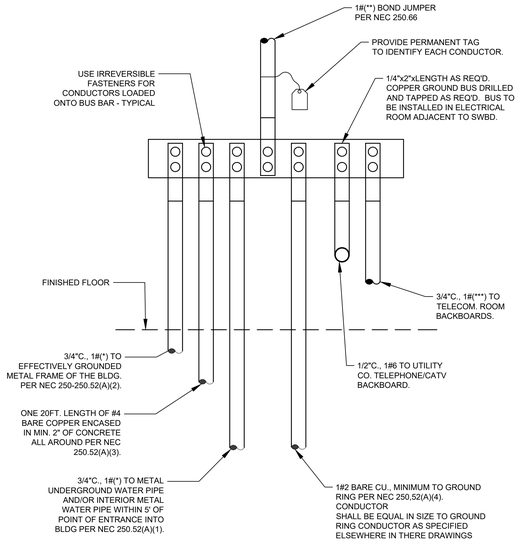

EXISTING SWITCHBOARD 'MSA' WITH EXISTING BALLFIELD LIGHTING - FEEDER SCHEDULE AND CALCULATIONS

LOAD						FEEDERS								VOLTAGE DROP CALCULATIONS				AFC CALCULATIONS		
NAME	PF	VOLTS	Ø	DEMAND		#	CONDUITS		WIRE PER CONDUIT		GND.PER CONDUIT	EST.	REMARKS	FEEDER SEGMENT DROP ONLY		NET DROP AT DEVICE		AFC FROM	MOTOR CONTRI-BUTION	NET AFC AT DEVICE
				KVA	AMPS		#	SIZE	#	SIZE	SIZE	DIST.		VOLTS DROP	%	VOLTS DROP	%	SOURCE		
LOAD ANALYSIS 'FOR MSA	1.00	240	1	**71**	**296**													42,000	0	**42,000**
COMMUNITY CENTER SUB-PANEL "A"	1.00	240	1	34	142	F05	4	2 1/2"	3	3/0	#6	15	COPPER	0.09	**0.0%**	0.09	**0.0%**	42,000		**38,106**
PUMP STATION SUB-PANEL "PS"	1.00	240	1	14	58	F04	1	2"	3	#1	#8	75	COPPER	1.21	**0.5%**	1.21	**0.5%**	42,000		**9,131**
YARD LIGHTING SUB-PANEL "SL"	1.00	240	1	23	96	F05	1	2"	3	#1	#6	10	COPPER	0.27	**0.1%**	0.27	**0.1%**	42,000		**28,379**

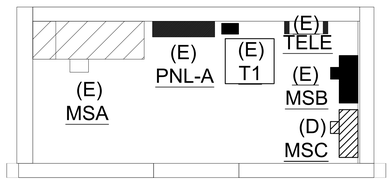

EXISTING COMMUNITY CENTERS ELECTRICAL ROOM EQUIPMENT LAYOUT

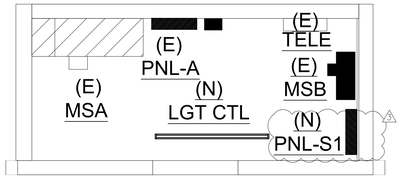

NEW AND EXISTING COMMUNITY CENTERS ELECTRICAL ROOM EQUIPMENT LAYOUT

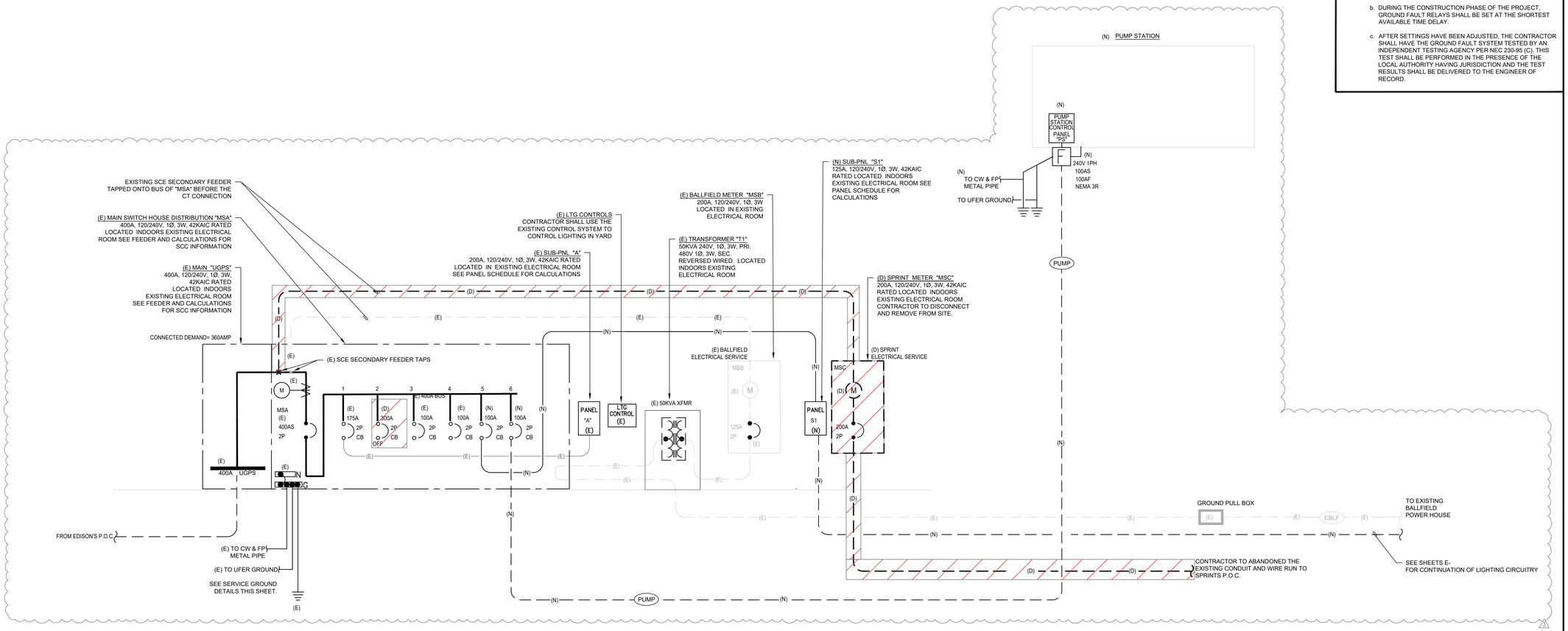

SINGLE LINE GENERAL NOTES

1. THE DESIGN PROFESSIONAL HAS PERFORMED REQUIRED SHORT CIRCUIT CALCULATIONS AND THE AIC RATING INDICATED FOR EACH DEVICE IS ADEQUATE TO PROTECT THE EQUIPMENT AND THE ELECTRICAL SYSTEM.
2. THE DESIGN PROFESSIONAL HAS PERFORMED ALL REQUIRED VOLTAGE DROP CALCULATIONS AND BRANCH CIRCUITS AND FEEDERS COMPLY WITH NEC 210-19(A) FPN NO. 4.
3. FAULT CURRENT CALCULATIONS ASSUME UTILITY PROVIDED ____KVA UTILITY TRANSFORMER WITH ____A OF AVAILABLE FAULT CURRENT LOCATED ___ FEET FROM MAIN SWITCHBOARD. REFER TO POWER UTILITY DRAWINGS FOR EXACT SIZE AND LOCATION. NOTIFY ENGINEER IN WRITING IF TRANSFORMER SIZE IS INCREASED OR DISTANCE IS DECREASED.
4. EACH SERVICE DISCONNECTING MEANS, AND THE EXTERIOR DOOR PROVIDING ACCESS TO THE DISCONNECTING MEANS, LOCATED IN AN APPROVED ELECTRICAL ROOM, SHALL BE PERMANENTLY MARKED WITH A 1 FOOT SQUARE YELLOW SIGN WITH 1" HIGH X 1/4" STROKE BLACK LETTERING OR NUMBERS AS REQUIRED BY CODE AND THE AUTHORITY HAVING JURISDICTION.

GENERAL NOTES

1. OVERCURRENT DEVICES IN AN INDIVIDUAL PIECE OF EQUIPMENT SHALL HAVE AN AIC RATING EQUAL TO THE OVERALL RATING OF THE EQUIPMENT - SERIES RATING OF DEVICES WITHIN A PIECE OF EQUIPMENT IS NOT ALLOWED.
2. SERIES CONNECTED DEVICES SHALL HAVE BEEN INVESTIGATED BY UL IN COMBINATION WITH THE END USE EQUIPMENT, AND THE EQUIPMENT IN WHICH THESE DEVICES ARE USED SHALL BE MARKED WITH THE SERIES CONNECTED RATING. EQUIPMENT SHALL BE MARKED IN ACCORDANCE WITH NEC REQUIREMENTS.
3. TERMINATIONS AND ENCLOSURES SHALL BE RATED FOR USE WITH 75 DEGREE CELSIUS CONDUCTORS.
4. SERVICE ENTRANCE EQUIPMENT, SWITCHBOARDS, DISTRIBUTION BOARDS, AND PANELBOARDS RATED AT 400 AMPS OR GREATER, SHALL BE PROVIDED WITH A MAIN OVERCURRENT DEVICE AND BUSSING RATED AT 100% CONTINUOUS OPERATION.
5. BRANCH OR FEEDER CIRCUIT OVER-CURRENT DEVICES RATED AT 400 AMPS OR HIGHER SHALL BE RATED FOR 100% CONTINUOUS OPERATION.
6. CONTRACTOR SHALL SUBMIT SWITCHBOARD SHOP DRAWINGS TO THE SERVING UTILITY FOR APPROVAL PRIOR TO FABRICATION. CONTRACTOR SHALL SECURE CONFIRMATION THAT THE PROPOSED SWITCHBOARD COMPLIES WITH THE POWER COMPANY REGULATIONS.
7. BUSSING:
   a. BUSSING SHALL BE COPPER OR ALUMINUM IN CONSTRUCTION. MAIN HORIZONTAL AND VERTICAL BUSSING SHALL BE FULL CAPACITY IN SWITCHBOARD SECTIONS.
   b. HORIZONTAL AND VERTICAL BUSSING SHALL BE FULL LENGTH. BUSSING SHALL HAVE A MINIMUM WITHSTAND RATING EQUAL TO THE AVAILABLE FAULT CURRENT INDICATED, BUT IN NO CASE SHALL THE RATING BE LESS THAN 65,000 AMPS, SYMMETRICAL.
8. GROUND FAULT RELAY SETTINGS:
   a. TO MINIMIZE NUISANCE TRIPPING OF THE MAIN AND FEEDER BREAKER, THE CONTRACTOR SHALL ADJUST THE GROUND FAULT RELAY SETTINGS FOR THE GFP DEVICES TO BE HIGHER THAN DOWNSTREAM GFP AND NON-GFP DEVICES. THE GROUND FAULT CURRENT PICK-UP AND TIME DELAY SETTINGS SHALL BE ADJUSTED, PER THE MANUFACTURERS RECOMMENDATIONS, RESULTING FROM A CONTRACTOR/MANUFACTURER PREPARED COORDINATION STUDY - WHICH SHALL BE DOCUMENTED IN THE SHOP DRAWING SUBMITTAL.
   b. DURING THE CONSTRUCTION PHASE OF THE PROJECT, GROUND FAULT RELAYS SHALL BE SET AT THE SHORTEST AVAILABLE TIME DELAY.
   c. AFTER SETTINGS HAVE BEEN ADJUSTED, THE CONTRACTOR SHALL HAVE THE GROUND FAULT SYSTEM TESTED BY AN INDEPENDENT TESTING AGENCY PER NEC 230-95 (C). THIS TEST SHALL BE PERFORMED IN THE PRESENCE OF THE LOCAL AUTHORITY HAVING JURISDICTION AND THE TEST RESULTS SHALL BE DELIVERED TO THE ENGINEER OF RECORD.

APPROVAL

CITY APPROVED BY:

DIRECTOR OF PUBLIC WORKS — DATE

CITY REVIEWED BY:

SENIOR ENGINEER — DATE

SUBMITTED BY:

DATE

CLIENT

LANCASTER
Creating a better tomorrow. Together.

CITY OF LANCASTER
44933 FERN AVENUE
LANCASTER, CA 93534

PROJECT NAME

SAMARITAN'S PURSE PARK FORMERLY KNOWN AS EL DORADO PARK RENOVATION

PWCP NO. 24-008

44501 5th STREET EAST
LANCASTER, CA 93535

ENGINEER/ARCHITECT

IDS

IDS GROUP
1 PETERS CANYON ROAD, SUITE 130
IRVINE, CA 92606
TEL: 949-387-8500, FAX: 949-387-0800

STAMP

REGISTERED PROFESSIONAL ENGINEER — STEVEN M. COLLTON — No. E22808 — Exp. 06-30-24 — ELECTRICAL — STATE OF CALIFORNIA

DATE SIGNED 09-23-23

ISSUE

REV.	DESCRIPTION	DATE
	30% CD SET	12/15/23
	60% CD SET	01/19/24
	90% CD SET	02/26/24
1	CLIENT REVISION	04/26/24
2	BID SET	09/10/24
3	BULLETIN #1	10/25/24
4	BULLETIN #1 R1	2/14/25
	COMPOSITE SET	9/24/25

PROJECT IDENTIFICATION

THIS DRAWING WAS CREATED IN AUTODESK AUTOCAD V. 2021 UNLESS OTHERWISE NOTED.

THE ORIGINAL SIZE OF THIS SHEET IS 30" X 42"

THESE DRAWINGS AND SPECIFICATIONS ARE THE PROPERTY AND COPYRIGHT OF IDS GROUP AND SHALL NOT BE USED ON ANY OTHER PROJECT OR LOCATIONS EXCEPT AS DESCRIBED ON THE DRAWINGS, WITHOUT THE WRITTEN AGREEMENT WITH IDS GROUP.

IDS PROJECT NO.	22X099.01
IDS DRAWN BY	SM
IDS CHECKED BY	SM
IDS APPROVED BY	SC

SHEET TITLE

SINGLE LINE DIAGRAM FOR THE COMMUNITY CENTER

SHEET NUMBER

E-02

SHEET NO. 3 OF 18

CUMULATIVE SHEET NO. XXX OF XXX

PROGRESS SET - NOT FOR CONSTRUCTION

IDS GROUP - FILE LOCATION: S:\PROJECTS\2022\SHARED\22X099.01 LANC - EL DORADO PARK\05 CAD\05 ELEC\2023-12-05-EXISTING CC FILES\E-02_SHEET 03_SLD PLOT DATE: 12/5/2024 7:23:24 PM USER: MICHAEL.REED

N.E.C. GROUNDING NOTES

(***) COMMUNICATIONS GROUND CONDUCTOR SHALL BE SIZED BASED ON DISTANCE BETWEEN TELECOMMUNICATIONS ROOM AND SYSTEM GROUNDED BUS BAR AS FOLLOWS:
0-200 FT. #1/0
OVER 200 FT. #3/0

(**) MAIN BONDING JUMPER SHALL BE SIZED AS FOLLOWS:

SERVICE SIZE	M.B.J. SIZE
0-1,000A	#3/0
1,200A	#4/0
1,600A	250KCMIL
2,000A	300KCMIL
2,500A	500KCMIL
3,000A	500KCMIL
4,000A	600KCMIL

(*) GROUNDING ELECTRODE CONDUCTOR SHALL BE SIZED AS FOLLOWS:

SERVICE SIZE	G.E.C. SIZE
0-200A	#4
201-400A	#1/0
OVER 400A	#3/0

NOTES:

1. THE ELECTRICAL CONTRACTOR SHALL PROVIDE A GROUNDING ELECTRODE SYSTEM IN ACCORDANCE WITH NEC 250.52(A)(1) THROUGH (A)(6).
2. IF NONE OF THESE SYSTEMS ARE AVAILABLE, THEN THE ELECTRODES SPECIFIED IN NEC 250.52(A)(4) THROUGH (A)(7) SHALL BE PROVIDED.

POTENTIAL ELECTRICAL ARC FLASH HAZARD NOTE

1. ALL ELECTRICAL PANELS, MOTOR CONTROL CENTERS AND SWITCHBOARDS REQUIRING EXAMINATION OR SERVICING WHILE ENERGIZED SHALL BE FILED-MARKED TO WARN QUALIFIED PERSONS OF POTENTIAL ELECTRICAL ARC FLASH HAZARDS. SUCH MARKING SHALL BE LOCATED SO AS TO BE CLEARLY VISIBLE TO QUALIFIED PERSONS BEFORE EXAMINATION, ADJUSTMENT, SERVICING OR MAINTENANCE. 2019 CALIFORNIA ELECTRICAL CODE CEC 110.16.

SERIES RATING NOTE

1. IF SERIES RATING IS INDICATED, THEN THERE SHALL BE A U.L. LISTED SERIES RATING BETWEEN THE LINESIDE CIRCUIT BREAKERS AT THE SERVICE ENTRANCE EQUIPMENT DISTRIBUTION SECTION AND DOWNSTREAM CIRCUIT BREAKERS AT PANELS BASED ON THE CALCULATED AVAILABLE FAULT CURRENT SUBMITTED BY THE UTILITY POWER COMPANY (INCLUDING MOTOR CONTRIBUTION) AT THE LINESIDE OF THE CIRCUIT BREAKERS.

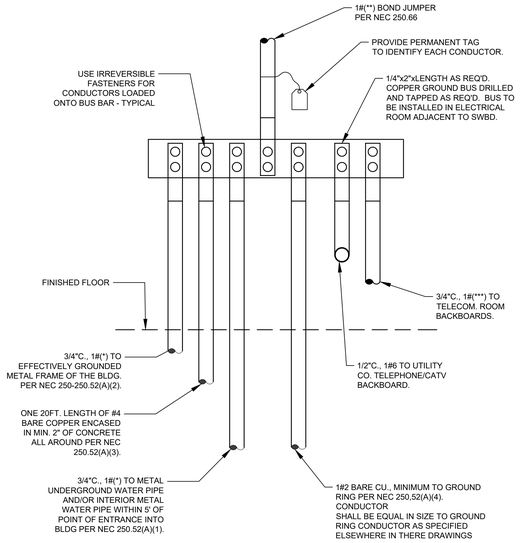

PANEL "PEDL1" — EXISTING UPDATED METER PEDESTAL

MOUNTING SURFACE | DOUBLE LUG NO | Volts: 120/240V | MAIN 100A
NEMA 3R YES | 200% NO | Phases: 1 | BUS 100
FEED THRU NO | I/G BUS NO | Wires: 3 | A.I.C. 22,000

NOTES	LOADS	CIRC	LOCATION	TRIP	POLES	A	B	A	B	POLES	TRIP	LOCATION	CIRC	LOADS	NOTES
	R	1	POWER OUTLETS	20A	1	700				1	20A	SPARE	2	R	
	L	3	WORKOUT PATH LIGHTING	20A	20		1020		1086	1	20A	PARKING LOT LIGHTING	4	L	
	L	5	WORKOUT PATH LIGHTING	20A	1	1020		240		1	20A	LCP	6		
		7	SPACE									SPACE	8		
		9	SPACE									SPACE	10		
		11	SPACE									SPACE	12		
						ØA	ØB								
			TOTAL DEMAND LOAD:			2215	2633								
			TOTAL DEMAND AMPS:			18	22								

84% PERCENT BALANCE

LOAD CLASSIFICATION	CONNECTED LOAD	DEMAND FACTOR	ESTIMATED DEMAND	PANEL LOADS	
CONTINUOUS LOAD = C	0	125%	0		
KITCHEN EQUIPMENT LOAD = K	0	100%	0	TOTAL CONN. LOAD (VA):	3826
LIGHTING LOAD = L	3126	125%	3908	TOTAL EST. DEMAND (VA):	4608
MOTOR LOAD = M	0	100%	0	TOTAL CONN. (AMPS):	16
NON-CONTINUOUS LOAD = N	0	100%	0	TOTAL EST. DEMAND (AMPS):	19
PANEL LOAD = P	0	100%	0		
RECEPTACLE LOAD = R	700	100%	700		

PANEL SCHEDULE NOTES:

1. PROVIDE LOCK-ON DEVICE.
2. PROVIDE LOCK-OFF DEVICE.
3. CIRCUIT BREAKER CONTROLLED BY ANSUL SYSTEM.REFER TO HOOD FIRE SYSTEM INTERLOCK DIAGRAM.
4. PROVIDE GFCI TYPE DEVICE.
5. PROVIDE A RED CIRCUIT BREAKER.
6. PROVIDE A NEW BREAKER TO EXISTING TYPE AND A.I.C. RATING IN PANEL
7. PROVIDE "HACR" TYPE CIRCUIT BREAKER. FOR HVAC EQUIPMENT.
8. PROVIDE PHOTOCELL AND TIME CLOCK CLOCK WITH RELAYS FOR EXTERIO LIGHITNG CONTROL. REFER TO EXTERIOR LIGHTING CONTROL DIAGRAM.
9. EXISTING BREAKER
10. CIRCUIT MADE AVAILABLE THROUGH DEMOLITION

100AMP SWITCHBOARD 'METER PED-1' - FEEDER SCHEDULE AND CALCULATIONS

LOAD								FEEDERS									VOLTAGE DROP CALCULATIONS				AFC CALCULATIONS		
NAME	PF	VOLTS	Ø	CONNECTED HP	CONNECTED KVA	DEMAND KVA	DEMAND AMPS	#	CONDUITS #	CONDUITS SIZE	WIRE PER CONDUIT #	WIRE PER CONDUIT SIZE	GND.PER CONDUIT SIZE	EST. DIST.	REMARKS	FEEDER SEGMENT DROP ONLY VOLTS DROP	%	NET DROP AT DEVICE VOLTS DROP	%	AFC FROM SOURCE	MOTOR CONTRI-BUTION	NET AFC AT DEVICE
LOAD ANALYSIS 'FOR **MPED-1**	1.00	240	1			**5**	**21**													**22,000**		**22,000**
PARKING LOT LIGHTING	1.00	240	1			2	8	3	1	1"	2	#6	#12	645	COPPER	4.19	**1.7%**	4.19	**1.7%**	22,000		**442**
POLE CAMRA POWER	1.00	240	1			1	4	4	1	1"	2	#6	#12	400	COPPER	1.30	**0.5%**	1.30	**0.5%**	22,000		**704**
YARD LIGHTING	1.00	240	1			1	5	5	1	1"	2	#6	#12	447	COPPER	1.60	**0.7%**	1.60	**0.7%**	22,000		**632**
YARD LIGHTING	1.00	240	1			1	4	6	1	1"	2	#6	#12	447	COPPER	1.45	**0.6%**	1.45	**0.6%**	22,000		**632**

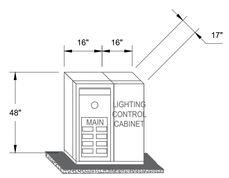

EXISTING METER PEDESTAL ELEVATION

EXISTING METER PEDESTAL OUTDOOR ELEVATION

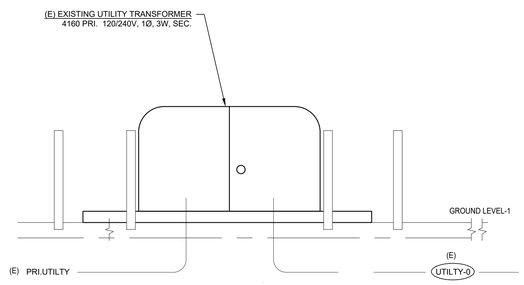

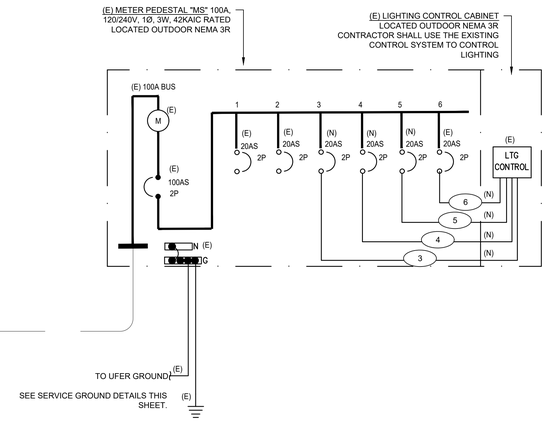

SINGLE LINE GENERAL NOTES

1. THE DESIGN PROFESSIONAL HAS PERFORMED REQUIRED SHORT CIRCUIT CALCULATIONS AND THE AIC RATING INDICATED FOR EACH DEVICE IS ADEQUATE TO PROTECT THE EQUIPMENT AND THE ELECTRICAL SYSTEM.
2. THE DESIGN PROFESSIONAL HAS PERFORMED ALL REQUIRED VOLTAGE DROP CALCULATIONS AND BRANCH CIRCUITS AND FEEDERS COMPLY WITH NEC 210-19(A) FPN NO. 4.
3. FAULT CURRENT CALCULATIONS ASSUME UTILITY PROVIDED ____KVA UTILITY TRANSFORMER WITH ____A OF AVAILABLE FAULT CURRENT LOCATED ___ FEET FROM MAIN SWITCHBOARD. REFER TO POWER UTILITY DRAWINGS FOR EXACT SIZE AND LOCATION. NOTIFY ENGINEER IN WRITING IF TRANSFORMER SIZE IS INCREASED OR DISTANCE IS DECREASED.
4. EACH SERVICE DISCONNECTING MEANS, AND THE EXTERIOR DOOR PROVIDING ACCESS TO THE DISCONNECTING MEANS, LOCATED IN AN APPROVED ELECTRICAL ROOM. SHALL BE PERMANENTLY MARKED WITH A 1 FOOT SQUARE YELLOW SIGN WITH 1" HIGH X 1/4" STROKE BLACK LETTERING OR NUMBERS AS REQUIRED BY CODE AND THE AUTHORITY HAVING JURISDICTION.

GENERAL NOTES

1. OVERCURRENT DEVICES IN AN INDIVIDUAL PIECE OF EQUIPMENT SHALL HAVE AN AIC RATING EQUAL TO THE OVERALL RATING OF THE EQUIPMENT - SERIES RATING OF DEVICES WITHIN A PIECE OF EQUIPMENT IS NOT ALLOWED.
2. SERIES CONNECTED DEVICES SHALL HAVE BEEN INVESTIGATED BY UL IN COMBINATION WITH THE END USE EQUIPMENT, AND THE EQUIPMENT IN WHICH THESE DEVICES ARE USED SHALL BE MARKED WITH THE SERIES CONNECTED RATING. EQUIPMENT SHALL BE MARKED IN ACCORDANCE WITH NEC REQUIREMENTS.
3. TERMINATIONS AND ENCLOSURES SHALL BE RATED FOR USE WITH 75 DEGREE CELSIUS CONDUCTORS.
4. SERVICE ENTRANCE EQUIPMENT, SWITCHBOARDS, DISTRIBUTION BOARDS, AND PANELBOARDS RATED AT 400 AMPS OR GREATER, SHALL BE PROVIDED WITH A MAIN OVERCURRENT DEVICE AND BUSSING RATED AT 100% CONTINUOUS OPERATION.
5. BRANCH OR FEEDER CIRCUIT OVER-CURRENT DEVICES RATED AT 400 AMPS OR HIGHER SHALL BE RATED FOR 100% CONTINUOUS OPERATION.
6. CONTRACTOR SHALL SUBMIT SWITCHBOARD SHOP DRAWINGS TO THE SERVING UTILITY FOR APPROVAL PRIOR TO FABRICATION. CONTRACTOR SHALL SECURE CONFIRMATION THAT THE PROPOSED SWITCHBOARD COMPLIES WITH THE POWER COMPANY REGULATIONS.
7. BUSSING:
   a. BUSSING SHALL BE COPPER OR ALUMINUM IN CONSTRUCTION. MAIN HORIZONTAL AND VERTICAL BUSSING SHALL BE FULL CAPACITY IN SWITCHBOARD SECTIONS.
   b. HORIZONTAL AND VERTICAL BUSSING SHALL BE FULL LENGTH. BUSSING SHALL HAVE A MINIMUM WITHSTAND RATING EQUAL TO THE AVAILABLE FAULT CURRENT INDICATED, BUT IN NO CASE SHALL THE RATING BE LESS THAN 65,000 AMPS, SYMMETRICAL.
8. GROUND FAULT RELAY SETTINGS:
   a. TO MINIMIZE NUISANCE TRIPPING OF THE MAIN AND FEEDER BREAKER, THE CONTRACTOR SHALL ADJUST THE GROUND FAULT RELAY SETTINGS FOR THE GFP DEVICES TO BE HIGHER THAN DOWNSTREAM GFP AND NON-GFP DEVICES. THE GROUND FAULT CURRENT PICK-UP AND TIME DELAY SETTINGS SHALL BE ADJUSTED, PER THE MANUFACTURERS RECOMMENDATIONS, RESULTING FROM A CONTRACTOR/MANUFACTURER PREPARED COORDINATION STUDY - WHICH SHALL BE DOCUMENTED IN THE SHOP DRAWING SUBMITTAL.
   b. DURING THE CONSTRUCTION PHASE OF THE PROJECT, GROUND FAULT RELAYS SHALL BE SET AT THE SHORTEST AVAILABLE TIME DELAY.
   c. AFTER SETTINGS HAVE BEEN ADJUSTED, THE CONTRACTOR SHALL HAVE THE GROUND FAULT SYSTEM TESTED BY AN INDEPENDENT TESTING AGENCY PER NEC 230-95 (C). THIS TEST SHALL BE PERFORMED IN THE PRESENCE OF THE LOCAL AUTHORITY HAVING JURISDICTION AND THE TEST RESULTS SHALL BE DELIVERED TO THE ENGINEER OF RECORD.
9. DRY TYPE TRANSFORMERS:
   a. DRY TYPE TRANSFORMERS OVER 112-1/2KVA SHALL HAVE A MINIMUM CLASS 155 INSULATION RATING SYSTEM.
   b. DRY TYPE TRANSFORMERS SHALL BE COMPLETELY ENCLOSED EXCEPT FOR VENTILATED OPENINGS..

APPROVAL

CITY APPROVED BY:
DIRECTOR OF PUBLIC WORKS DATE
CITY REVIEWED BY:
SENIOR ENGINEER DATE
SUBMITTED BY:
DATE

CLIENT
LANCASTER
Creating a better tomorrow. Together.
CITY OF LANCASTER
44933 FERN AVENUE
LANCASTER, CA 93534

PROJECT NAME
SAMARITAN'S PURSE PARK FORMERLY KNOWN AS EL DORADO PARK RENOVATION
PWCP NO. 24-008
44501 5th STREET EAST
LANCASTER, CA 93535

ENGINEER/ARCHITECT
IDS
IDS GROUP
1 PETERS CANYON ROAD, SUITE 130
IRVINE, CA. 92606
TEL: 949-387-8500, FAX: 949-387-0800

STAMP
REGISTERED PROFESSIONAL ENGINEER STEVEN M. COLLINS No. E22808 Exp. 06/30/24 ELECTRICAL STATE OF CALIFORNIA
DATE SIGNED 09-23-23

ISSUE

REV.	DESCRIPTION	DATE
	30% CD SET	12/15/23
	60% CD SET	01/19/24
	90% CD SET	02/26/24
1	CLIENT REVISION	04/26/24
2	BID SET	09/10/24
3	BULLETIN #1	10/25/24
4	BULLETIN #1 R1	2/14/25
	COMPOSITE SET	9/24/25

PROJECT IDENTIFICATION

THIS DRAWING WAS CREATED IN AUTODESK AUTOCAD V. 2021 UNLESS OTHERWISE NOTED.

THE ORIGINAL SIZE OF THIS SHEET IS 30" X 42"

THESE DRAWINGS AND SPECIFICATIONS ARE THE PROPERTY AND COPYRIGHT OF IDS GROUP AND SHALL NOT BE USED ON ANY OTHER PROJECT OR LOCATIONS EXCEPT AS DESCRIBED ON THE DRAWINGS, WITHOUT THE WRITTEN AGREEMENT WITH IDS GROUP.

IDS PROJECT NO.	22X099.01
IDS DRAWN BY	SM
IDS CHECKED BY	SM
IDS APPROVED BY	SC

SHEET TITLE
SINGLE LINE DIAGRAM UPGRADE FOR THE WORKOUT METER PEDESTAL

SHEET NUMBER
E-02.1
SHEET NO. 4 OF 18
CUMULATIVE SHEET NO. XXX OF XXX

PROGRESS SET - NOT FOR CONSTRUCTION

IDS GROUP - FILE LOCATION: S:\PROJECTS\2022\SHARED\22X099.01 LANC - EL DORADO PARK\05 CAD\05 ELEC\2023-12-05-EXISTING CC FILES\E-02_SHEET 03_SLD PLOT DATE: 12/5/2024 7:24:09 PM USER: MICHAEL.REED

FIXTURE NOTES

1. FIXTURES SHALL INCLUDE ALL ACCESSORIES FOR INSTALLATION AS REQUIRED BY CALIFORNIA AND LOCAL ELECTRICAL CODES.

2. PRIOR TO THE RELEASE OF THE FIXTURE ORDER. THE PARTY RESPONSIBLE FOR FIXTURE PROCUREMENT (TYPICALLY THE CONTRACTOR.) SHALL:
   - VERIFY ALL FIXTURES SHALL HAVE APPROPRIATE UL, ETL, OR OTHER RECOGNIZED AND ACCEPTED TESTING AGENCY FOR DRY, DAMP, OR WET LOCATION INSTALLATION AS REQUIRED BY CALIFORNIA AND LOCAL ELECTRICAL CODES.
   - VERIFY ALL INTEGRAL OR REMOTE DR RECOGNIZED BY UL, ETL, OR OTHER RECOGNIZED TESTING AGENCY. REMOTE DRIVERS SHALL BE LISTED AS "ASSEMBLY" TO OPERATE WITH THE LUMINARIES.
   - WORK WITH THE CONTRACTOR TO VERIFY ITEMS OUTLINED IN THE SECTIONS BELOW.

3. PRIOR TO THE RELEASE OF THE LIGHTING FIXTURE ORDER, CONTRACTOR SHALL WORK WITH THE LIGHTING PROCUREMENT AGENT TO:
   - VERIFY FIXTURE LOCATION AND ABOVE-CEILING CLEARANCE FOR RECESSED FIXTURES. THE CONTRACTOR SHALL NOTIFY THE LIGHTING DESIGNER OF ANY CONFLICTS.
   - VERIFY FINAL FIXTURE VOLTAGE.
   - VERIFY CEILING TRIM OR COMPATIBILITY (E.G. GYP. OR SUSPENDED CEILING.)
   - VERIFY LENGTHS OF COVE OR PERIMETER LIGHTING. THESE FIXTURES MUST NOT BE DIMENSIONED FROM PLANS.
   - IDENTIFY FIRE-RATED CEILING OR FLOOR ASSEMBLIES AND PROVIDE FIRE-RATED ENCLOSURES FOR FIXTURES INSTALLED IN THESE CONDITIONS.
   - IDENTIFY INSULATED CEILING AREAS AND PROVIDE IC-RATED HOUSING OPTIONS FOR FIXTURES TO BE INSTALLED. THE CONTRACTOR SHALL NOTIFY THE LIGHTING DESIGNER IF AN IC OPTION IS NOT AVAILABLE FOR THE SPECIFIED FIXTURES(S).

4. LAMPS OR LED LIGHT ENGINES SHALL BE INSTALLED AS OUTLINED IN THE FIXTURE SCHEDULE BELOW.

5. THICKNESS OF CEILINGS IN EXCESS OF 3/4" SHALL BE IDENTIFIED IN WRITING BY THE ARCHITECT OR CONTRACTOR.

6. WALLS DIRECTLY ILLUMINATED (E.G., "WALL GRAZING" OR PERIMETER LIGHTING SYSTEMS) SHALL BE A LEVEL 5 FINISH, AS DEFINED IN GYPSUM ASSOCIATION GA216-96.

7. THE ARCHITECT AND LIGHTING DESIGNER SHALL APPROVE FIXTURE SUBSTITUTIONS PRIOR TO BID, IN ACCORDANCE WITH SECTION 26.00.00 SPECIFICATIONS IF NON-SPECIFIED OR ALTERNATES ARE INSTALLED. THEY SHALL BE REPLACED AT THE CONTRACTOR'S SOLE EXPENSE (INCLUDING BACKCHARGES BY OTHER TRADES SUCH AS DRYWALL, PAINTING, ETC.) WITH NO ADDITIONAL COST TO THE OWNER.

COMMUNITY LIGHTING FIXTURE SCHEDULE

Type	Manufacturer	Part ID	Description	Mounting Height	Lumens	Wattage	Voltage
a	LUMINIS	SN820C-L1L9-K35-120-BKT--NT-SWK	OUTDOORS UNDER EVE CEILING MOUNT	9-10' AFF	83 LUMEN	11.3 W	120V
b	VISION VCM8	VCM8 4FT NODIM--50W-40K-120-CLP-WHT	WALL MOUNT 4FT, X 2 EACH 50WATT EACH	8-9' AFF	4000 LUMEN	50W	120V
c	LITHONIA LIGHTING	ZL1D-L48-ASR-5000LM-FST-120-40K-80CRI	'PENDANT LINEAR DIRECT 4FT. 41WATT EACH	8-10' AFF	5000 LUMEN	41W	120V
d	bodhi	BSS210-4-40-D-R-B--C4-ST-AW	'PENDANT CHAIN LINEAR DIRECT 7' X 3-FIX 21FT. 8.5W FT.	FIELD VERIFY	4000 LUMENS PER 4FT.	178.5W	120V
e	PACLIGHTS	FFLE/2 -050-UV-4000K-FM-DB	OUTDOOR UNDER EVE, SURFACE MOUNT EACH	FIELD VERIFY	6918 LUMEN	50W	120V
f	PACLIGHTS	FFLE/2 -060-UV-4000K-FM-DB	OUTDOOR TOP OF TRELLIS MOUNT EACH	FIELD VERIFY	3022 LUMEN	60W	120V

SITE LIGHTING FIXTURE SCHEDULE

Type	Manufacturer	Part ID	Description	Mounting Height	Lumens	Wattage	Voltage
SF1	BULLARD BOLLARDS	EDGE SP 10L 90 50D GH1595_ FGFT400 [FINISH]-[ACCES	(2) FIXTURES PER POLE	MOUNTED FIXTURE @ 20FT	2180 Lumens		
SFI CNTRL	LSI	ALBC [xxamp] Load Controller					
SF1 Pole	LSI	5RPU-T-S11G-20'-D[XX]-[MOUNTING]-[FINISH]-GA	5" ROUND, STEEL POLE 20' IN LENGTH				
SF1 Pole	LSI	GBC DECORATIVE BASE COVER: 483859[CLR	POLE BASE COVER				
SF2	LSI	OPS-PT-12L-5R-UNV-40K8-[Finish]-ALBCS1		MH: 16' TOP OF FIXTURE @ APPROX 16FT AFG	11286 Delivered Lumens	85W	UNV
SF2 Pole	LSI	5RPU-T-S11G-20'-D[XX]-[MOUNTING]-[FINISH]-GA	5" ROUND, STEEL POLE 20' IN LENGTH				
SF2 Pole	LSI	GBC DECORATIVE BASE COVER: 483859[CLR	POLE BASE COVER				
SF3	LSI	SLM-LED-24L-SIL-FT-UNV-DIM-40-70CRI-ALBCS1-[Finish]		MH: 20' POLE MOUNTED FIXTURE @ 20FT AFG	25238 Delivered Lumens	161W	UNV
SF3 Pole	LSI	5RPU-T-S11G-20'-D[XX]-[MOUNTING]-[FINISH]-GA	5" ROUND, STEEL POLE 20' IN LENGTH				UNV
SF3 Pole	LSI	GBC DECROTIVE BASE COVER 483859 CR	5" ROUND, STEEL POLE 20' IN LENGTH				120V
SFP	LSI	40FT. POLE 6X10 FLAG FIXTURE SET BACK 5FT.	IN GROUND UP LIGHT	IN GROUND	XIG-LED-19-350-CW-UE-SP11	22W	120V
Time Clock	LSI	ALB TK 120					120v

COMMUNITY CENTER NEW LIGHTING PLAN | N.T.S. | 1

APPROVAL

CITY APPROVED BY:

DIRECTOR OF PUBLIC WORKS DATE

CITY REVIEWED BY:

SENIOR ENGINEER DATE

SUBMITTED BY:

DATE

CLIENT

LANCASTER
Creating a better tomorrow. Together.

CITY OF LANCASTER

44933 FERN AVENUE
LANCASTER, CA 93534

PROJECT NAME

SAMARITAN'S PURSE PARK FORMERLY KNOWN AS EL DORADO PARK RENOVATION

PWCP NO. 24-008

44501 5th STREET EAST
LANCASTER, CA 93535

ENGINEER/ARCHITECT

IDS

IDS GROUP

1 PETERS CANYON ROAD, SUITE 130
IRVINE, CA. 92606
TEL: 949-387-8500, FAX: 949-387-0800

STAMP

REGISTERED PROFESSIONAL ENGINEER
STEVEN M COLLINS
No. E32808
Exp. 06-30-24
ELECTRICAL
STATE OF CALIFORNIA

DATE SIGNED 09-23-23

ISSUE

REV.	DESCRIPTION	DATE
	30% CD SET	12/15/23
	60% CD SET	01/19/24
	90% CD SET	02/26/24
1	CLIENT REVISION	04/26/24
2	BID SET	09/10/24
3	BULLETIN #1	10/25/24
4	BULLETIN #1 R1	2/14/25
	COMPOSITE SET	9/24/25

PROJECT IDENTIFICATION

THIS DRAWING WAS CREATED IN AUTODESK AUTOCAD V. 2021 UNLESS OTHERWISE NOTED.

THE ORIGINAL SIZE OF THIS SHEET IS 30" X 42"

THESE DRAWINGS AND SPECIFICATIONS ARE THE PROPERTY AND COPYRIGHT OF IDS GROUP AND SHALL NOT BE USED ON ANY OTHER PROJECT OR LOCATIONS EXCEPT AS DESCRIBED ON THE DRAWINGS, WITHOUT THE WRITTEN AGREEMENT WITH IDS GROUP.

IDS PROJECT NO.	22X099.01
IDS DRAWN BY	SM
IDS CHECKED BY	SM
IDS APPROVED BY	SC

SHEET TITLE

LIGHT FIXTURE SCHEDULE

SHEET NUMBER

E-03

SHEET NO. 5 OF 18

CUMULATIVE SHEET NO. XXX OF XXX

PROGRESS SET - NOT FOR CONSTRUCTION

IDS GROUP - FILE LOCATION: S:\PROJECTS\2022\SHARED\22X099.01 LANC - EL DORADO PARK\05 CAD\05 ELEC\2023-12-05-EXISTING CC FILESIE-03_SHEET 04_LIGHT FIXTURE SCHEDULES PLOT DATE: 12/5/2024 7:23:28 PM USER: MICHAEL.REED

PANEL "A" EXISTING

MOUNTING SURFACE | DOUBLE LUG NO | Volts: 120/240V | MAIN MLO
NEMA 3R NO | 200% NO | Phases: 1 | BUS 225
FEED THRU NO | I/G BUS NO | Wires: 3 | A.I.C. 10,000

NOTES	LOADS	CIRC	LOCATION	TRIP	POLES	A	B	A	B	POLES	TRIP	LOCATION	CIRC	LOADS	NOTES
		1	CRAFTS ROOM	20A	1	1000		1550		1	20A	STORAGE, ELEC. RM., OFFICE & FLOODS	2	L	
	L	3	CRAFTS ROOM	20A	1		1000		900	1	20A	EXTERIOR LIGHTS UNDER EAVES	4	L	
	L	5	TOILETS, CONCESSION, TEL. BOOTH	20A	1	1150		900		1	20A	CRAFTS RM. & OFFICE	6	L	
	L	7	STORAGE & ELEC. ROOMS	20A	1		700		900	1	20A	CRAFTS ROOM	8	L	
	R	9	GARBAGE DISPOSAL (1/3 HP)	20A	1	760		4930		2	50A	KITCHEN UNIT RANGE & OVEN	10	K	
	R	11	CONCESSION	20A	1		600		4930	2	50A	KITCHEN UNIT RANGE & OVEN	12	K	
	R	13	EVAPORATIVE CLR (1/4 HP), UNIT HTR (1/8 HP)	20A	1	630		50		1	20A	TIME CLOCKS	14	R	
	R	15	REFRIDGERATOR, EXH. FAN (60W) & PLUGS	20A	1		1200		1200	1	20A	AREA LIGHTS	16	L	
	R	17	SPRINKLER CONTROLLER	20A	1	100		1500		1	20A	AREA LIGHTS	18	L	
		19	SPARE	20A	1					1	20A	SPARE	20		
		21	SPARE	20A	1	500		400		1	20A	SPARE	22		
		23	SPACE		1							SPACE	24		

REMOVE EXISTING 50AMP RANGE CIRCUIT AND REPLACE IT WITH 20AMP CIR TO BE USED WITH COUNTER TOP MICROWAVE SEE PLANS

	ØA	ØB
TOTAL DEMAND LOAD:	14745	12605
TOTAL DEMAND AMPS:	123	105

85% PERCENT BALANCE

LOAD CLASSIFICATION	CONNECTED LOAD	DEMAND FACTOR	ESTIMATED DEMAND	PANEL LOADS	
CONTINUOUS LOAD = C	0	125%	0		
KITCHEN EQUIPMENT LOAD = K	9860	100%	9860	TOTAL CONN. LOAD (VA):	23000
LIGHTING LOAD = L	9800	125%	12250	TOTAL EST. DEMAND (VA):	25450
MOTOR LOAD = M	0	100%	0	TOTAL CONN. (AMPS):	96
NON-CONTINUOUS LOAD = N	0	100%	0	TOTAL EST. DEMAND (AMPS):	106
PANEL LOAD = P	0	100%	0		
RECEPTACLE LOAD = R	3340	100%	3340		

PANEL SCHEDULE NOTES:

1. PROVIDE LOCK-ON DEVICE.
2. PROVIDE LOCK-OFF DEVICE.
3. CIRCUIT BREAKER CONTROLLED BY ANSUL SYSTEM. REFER TO HOOD FIRE SYSTEM INTERLOCK DIAGRAM.
4. PROVIDE GFCI TYPE DEVICE.
5. PROVIDE A RED CIRCUIT BREAKER.
6. PROVIDE A NEW BREAKER TO EXISTING TYPE AND A.I.C. RATING IN PANEL
7. PROVIDE "HACR" TYPE CIRCUIT BREAKER. FOR HVAC EQUIPMENT.
8. PROVIDE PHOTOCELL AND TIME CLOCK CLOCK WITH RELAYS FOR EXTERIO LIGHITNG CONTROL. REFER TO EXTERIOR LIGHTING CONTROL DIAGRAM.
9. EXISTING BREAKER
10. CIRCUIT MADE AVAILABLE THROUGH DEMOLITION

EXISTING PANEL SCHEDULE

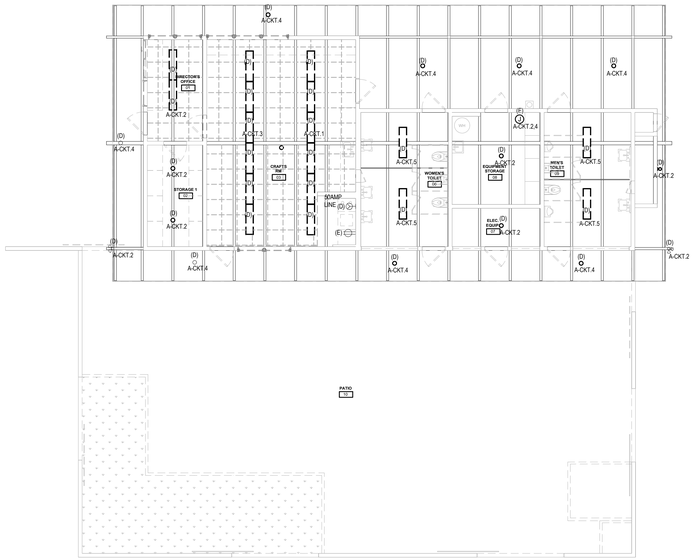

COMMUNITY CENTER DEMO LIGHTING PLAN | 1/8" = 1'-0" | 1

PANEL "A" EXISTING WITH NEW CKT. LOADS

MOUNTING SURFACE | DOUBLE LUG NO | Volts: 120/240V | MAIN MLO
NEMA 3R NO | 200% NO | Phases: 1 | BUS 225
FEED THRU NO | I/G BUS NO | Wires: 3 | A.I.C. 10,000

NOTES	LOADS	CIRC	LOCATION	TRIP	POLES	A	B	A	B	POLES	TRIP	LOCATION	CIRC	LOADS	NOTES
		1	CRAFTS ROOM	20A	1	223		623		1	20A	STORAGE, ELEC. RM., OFFICE & FLOODS	2	L	
	L	3	CRAFTS ROOM	20A	1		480		173	1	20A	EXTERIOR LIGHTS UNDER EAVES	4	L	
	L	5	TOILETS, CONCESSION, TEL. BOOTH	20A	1	240		240		1	20A	CRAFTS RM. & OFFICE	6	L	
	L	7	STORAGE & ELEC. ROOMS	20A	1		470		356	1	20A	CRAFTS ROOM	8	L	
	R	9	GARBAGE DISPOSAL (1/3 HP)	20A	1	760		1200		1	20A	COUNTER MICROWAVE	10	K	
	R	11	CONCESSION	20A	1		600		1200	1	20A	COUNTER MICROWAVE	12	K	
	R	13	EVAPORATIVE CLR (1/4 HP), UNIT HTR (1/8 HP)	20A	1	630		50		1	20A	TIME CLOCKS	14	R	
	R	15	REFRIDGERATOR, EXH. FAN (60W) & PLUGS	20A	1		1200		3540	2	40A	CU-1	16	M	
	R	17	SPRINKLER CONTROLLER	20A	1	100		3540		2	--	CU-1	18	M	
	M	19	EF-1 AND 2	20A	1		936		1500	1	20A	FC-1	20	M	
	R	21	EXISTING LOAD	20A	1	1000		180		1	20A	GFCI OUTLET	22	R	
	R	23	TV OUTLET	20A	1		180		1200	1	20A	DATA RACK	24	R	

	ØA	ØB
TOTAL DEMAND LOAD:	9062	13090
TOTAL DEMAND AMPS:	76	109

69% PERCENT BALANCE

LOAD CLASSIFICATION	CONNECTED LOAD	DEMAND FACTOR	ESTIMATED DEMAND	PANEL LOADS	
CONTINUOUS LOAD = C	0	125%	0		
KITCHEN EQUIPMENT LOAD = K	2400	100%	2400	TOTAL CONN. LOAD (VA):	25438
LIGHTING LOAD = L	2592	125%	3228	TOTAL EST. DEMAND (VA):	27854
MOTOR LOAD = M	14556	100%	16326	TOTAL CONN. (AMPS):	106
NON-CONTINUOUS LOAD = N	0	100%	0	TOTAL EST. DEMAND (AMPS):	116
PANEL LOAD = P	0	100%	0		
RECEPTACLE LOAD = R	5900	100%	5900		

PANEL SCHEDULE NOTES:

1. PROVIDE LOCK-ON DEVICE.
2. PROVIDE LOCK-OFF DEVICE.
3. CIRCUIT BREAKER CONTROLLED BY ANSUL SYSTEM. REFER TO HOOD FIRE SYSTEM INTERLOCK DIAGRAM.
4. PROVIDE GFCI TYPE DEVICE.
5. PROVIDE A RED CIRCUIT BREAKER.
6. PROVIDE A NEW BREAKER TO EXISTING TYPE AND A.I.C. RATING IN PANEL
7. PROVIDE "HACR" TYPE CIRCUIT BREAKER. FOR HVAC EQUIPMENT.
8. PROVIDE PHOTOCELL AND TIME CLOCK CLOCK WITH RELAYS FOR EXTERIO LIGHITNG CONTROL. REFER TO EXTERIOR LIGHTING CONTROL DIAGRAM.
9. EXISTING BREAKER
10. CIRCUIT MADE AVAILABLE THROUGH DEMOLITION

EXISTING PANEL SCHEDULE WITH NEW CONNECTED LOADS

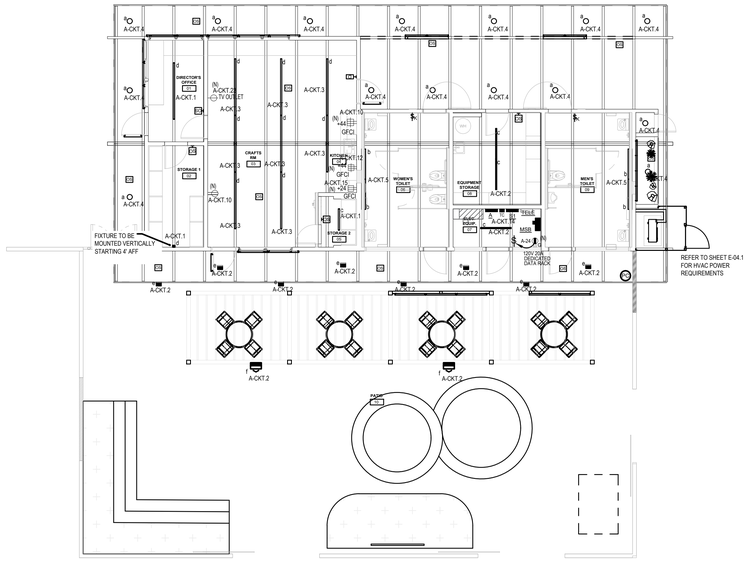

COMMUNITY CENTER NEW LIGHTING & POWER PLAN | 1/8" = 1'-0" | 1

GENERAL LIGHTING DEMO NOTES

1. WORK INCLUDED: LABOR, MATERIAL, APPLIANCES, TOOLS, EQUIPMENT, FACILITIES, TRANSPORTATION AND SERVICES NECESSARY AND INCIDENTAL TO PERFORMING OPERATIONS IN CONNECTION WITH THE DEMOLITION, DISPOSAL, TRANSPORTATION AND RECONNECTION OF EXISTING REMAINING EQUIPMENT/DEVICES. COMPLETE AS INDICATED IN THE CONTRACT DOCUMENTS AS SPECIFIED HEREIN.
2. THE FOLLOWING IS INTENDED TO COVER THE COMPLETE DEMOLITION, DISPOSAL, TRANSPORTATION AND RECONNECTION OF EXISTING ELECTRICAL EQUIPMENT. THE OMISSION OF EXPRESSED REFERENCE TO ANY ITEM OF LABOR OR MATERIAL FOR THE PROPER EXECUTION OF THE WORK IN ACCORDANCE WITH PRESENT PRACTICE OF THE TRADE SHALL NOT RELIEVE THE CONTRACTOR FROM PROVIDING SUCH ADDITIONAL LABOR AND MATERIALS.
3. REFER TO THE CONTRACT DOCUMENTS FOR ADDITIONAL DEMOLITION REQUIREMENTS WHICH AFFECT THE PROPER EXECUTION OF THIS WORK. DIAGRAMS AND SYMBOLS SHOWING ELECTRICAL CONNECTIONS ARE DIAGRAMMATIC ONLY. WIRING DIAGRAMS DO NOT NECESSARILY SHOW THE EXACT PHYSICAL ARRANGEMENT OF THE EQUIPMENT.
4. IT IS THE CONTRACTOR'S RESPONSIBILITY TO VISIT THE SITE AND BECOME THOROUGHLY FAMILIAR WITH FEATURES OF THE BUILDING AND SITE WHICH MAY AFFECT THE PROPER PERFORMANCE OF THIS WORK.
5. PORTIONS OF THESE PLANS HAVE BEEN DERIVED FROM INFORMATION TAKEN FROM ORIGINAL ELECTRICAL PLANS. THE INTENT OF THE DRAWINGS AND SPECIFICATIONS IS TO PROVIDE FOR THE REMOVAL AND DISPOSAL OF ELECTRICAL EQUIPMENT, LIGHTING FIXTURES, DEVICES, OUTLET BOXES, CONDUIT, WIRING AS DEFINED HEREIN AND AS INDICATED ELSEWHERE IN THE CONTRACT DOCUMENTS.
6. IT IS UNDERSTOOD AND AGREED THAT THIS CONTRACT DOES NOT CONTEMPLATE THE HANDLING OF ASBESTOS, PCB OR ANY HAZARDOUS WASTE MATERIAL. IF ASBESTOS, PCB OR ANY HAZARDOUS WASTE MATERIAL IS ENCOUNTERED, NOTIFY THE ARCHITECT IMMEDIATELY. DO NOT DISTURB, HANDLE OR ATTEMPT TO REMOVE.
7. THE SCOPE OF DEMOLITION WORK SHALL INCLUDE, BUT IS NOT LIMITED TO THE FOLLOWING:
   a. SUBMIT PROPOSED OUTAGE SCHEDULE. PROVIDE A SEQUENCE OF DEMOLITION TO INSURE THE UNINTERRUPTED USE OF OCCUPIED PORTIONS OF THE FACILITY WHICH ARE TO REMAIN OPERATIONAL DURING THE CONTRACT PERIOD.
   b. SYSTEM OUTAGES SHALL BE PERMITTED ONLY AT TIMES APPROVED BY OWNER, IN WRITING. WORK WHICH COULD RESULT IN A ACCIDENTAL OUTAGE (BEYOND BRANCH CIRCUITS) SHALL BE PERFORMED WITH THE OWNER'S MAINTENANCE PERSONNEL ADVISED OF SUCH WORK.
   c. COORDINATE WITH THE OWNER AND DESIGNATE A PORTION OF THE FACILITY FOR SAFELY STORING REMOVED AND SALVAGED MATERIALS.
   d. REMOVED MATERIALS AND EQUIPMENT WHICH IN THE OPINION OF THE OWNER/ARCHITECT ARE SALVAGEABLE, SHALL REMAIN THE PROPERTY OF THE OWNER. DELIVER SUCH SALVAGED MATERIALS AND EQUIPMENT ON PREMISES AS DIRECTED, NEATLY PILE OR STORE THEM AND PROTECT FROM DAMAGE. DO NOT REUSE MATERIALS AND EQUIPMENT UNLESS SPECIFICALLY INDICATED ON PLANS OR SPECIFIED. REMOVE FROM PREMISES AND DISPOSE OF MATERIALS CONSIDERED BY THE OWNER/ARCHITECT TO BE SCRAP.
   e. AS INDICATED, DISCONNECT AND REMOVE EXISTING LIGHTING FIXTURES, LIGHTING CONTROL DEVICES, HARDWARE, SUPPORT DEVICES AND ASSOCIATED RACEWAYS, CONDUCTORS AND OUTLET BOXES. WHERE OUTLET BOXES ARE FLUSH AND CONDUITS ARE CONCEALED IN EXISTING REMAINING WALLS, REMOVE WIRING, AND ABANDON CONDUIT IN PLACE.
   f. AS INDICATED, DISCONNECT AND REMOVE EXISTING ELECTRICAL EQUIPMENT, DISCONNECT SWITCHES, RECEPTACLES, MOUNTING HARDWARE AND ASSOCIATED RACEWAYS, CONDUCTORS AND OUTLET BOXES. WHERE OUTLET BOXES ARE FLUSH AND CONDUITS ARE CONCEALED IN EXISTING REMAINING WALLS, REMOVE WIRING AND ABANDON CONDUIT IN PLACE.
8. THE CONTRACTOR SHALL FIELD VERIFY EXISTING EQUIPMENT, DEVICES, AND/OR CIRCUITS THAT ARE REMAINING. CIRCUITS SHALL BE RECONNECTED TO NEW OR EXISTING POWER DISTRIBUTION EQUIPMENT AND FUNCTION IN THE MANNER THEY WERE ORIGINALLY DESIGNED. PROVIDE ADDITIONAL EQUIPMENT, DEVICES, OUTLET BOXES, CONDUIT, WIRING AS REQUIRED TO RESTORE CONTINUITY TO THESE CIRCUITS.
9. WHERE FIXTURES, EQUIPMENT, DEVICES ARE SPECIFIED BY THE CONTRACT DOCUMENTS FOR REMOVAL, THE CONTRACTOR SHALL REMOVE CIRCUIT CONDUCTORS/CABLING BACK TO THE NEAREST REMAINING JUNCTION BOX AND/OR POINT OF TERMINATION.
10. RELOCATE EXISTING CONDUITS AND/OR CONDUCTORS/CABLING ROUTING THROUGH AREAS WHERE NEW PLENUMS AND/OR ROOF OPENINGS ARE SPECIFIED.
11. RELOCATION AND/OR REMOVAL OF EXISTING EQUIPMENT, DEVICES, OUTLET BOXES, CONDUIT, WIRING MAY AFFECT THE OPERATION OF EXISTING, REMAINING ELECTRICAL EQUIPMENT/DEVICES. THE CONTRACTOR SHALL PROVIDE ADDITIONAL MATERIALS AS REQUIRED TO MAINTAIN AND/OR RESTORE CONTINUITY OF SERVICE TO EXISTING, REMAINING ELECTRICAL/DEVICES.
12. PROVIDE NECESSARY DEMOLITION TO REMOVE EXISTING UNUSED RACEWAYS, CONDUCTORS, CABLING, OUTLET BOXES, RECEPTACLES, SWITCHES, EQUIPMENT.
13. DISCONNECT ABANDONED CIRCUITS AT EXISTING PANELBOARDS AND REMOVE WIRE TO LAST REMAINING DEVICE. LABEL ABANDONED CIRCUIT BREAKERS "SPARE".
14. EXISTING CIRCUITS THAT ARE REMOVED AND ARE NOT RE-USED SHALL BE IDENTIFIED ON THE PANEL DIRECTORY AS "SPARE".

DEMO NOTES

1. DISCONNECT, REMOVE AND REPLACE EXISTING LIGHT FIXTURE FROM EXISTING ROOM SWITCH-LEGS. CONSTANT HOT CIRCUITING SHALL REMAIN AS IS.
   VERIFY EXACT CIRCUIT NUMBER IN FIELD.
2. ALL EXISTING EXIT SIGN LUMINAIRES ARE TO REMAIN AND ARE NOT A PART OF THIS PERMIT SET..
3. EXISTING EMERGENCY FIXTURES SHALL BE REPLACED WITH NEW FIXTURES, AND TO REMAIN ON THE EMERGENCY LIGHT CIRCUIT.
4. ALL EXISTING FLOOR TO FLOOR LIGHTING CIRCUITRY ARE EXISTING TO REMAIN TO BE REUSED TO CONNECT TO NEW FIXTURES.
5. THESE PLANS HAVE BEEN DERIVED FROM THE AS-BUILT PLANS AND FROM ON SITE OBSERVATION / CONDITION ARE EXISTING AND SHALL BE VERIFIED BY THE CONTRACTOR..
6. CIRCUIT NUMBERS PROVIDED ON THESE DOCUMENTS ARE EXISTING, AND HAVE BEEN DERIVED FROM AS-BUILT DRAWINGS.
7. CONTRACTOR SHALL COORDINATE LOCK OUT, TAG OUT PROCEDURE WITH OWNERS ENGINEERING MANAGEMENT PRIOR TO WORKING OR DE ENERGIZING.

APPROVAL

CITY APPROVED BY:

DIRECTOR OF PUBLIC WORKS — DATE
CITY REVIEWED BY:

SENIOR ENGINEER — DATE
SUBMITTED BY:

DATE

CLIENT

LANCASTER
Creating a better tomorrow. Together.

CITY OF LANCASTER
44933 FERN AVENUE
LANCASTER, CA 93534

PROJECT NAME

SAMARITAN'S PURSE PARK FORMERLY KNOWN AS EL DORADO PARK RENOVATION

PWCP NO. 24-008

44501 5th STREET EAST
LANCASTER, CA 93535

ENGINEER/ARCHITECT

IDS

IDS GROUP
1 PETERS CANYON ROAD, SUITE 130
IRVINE, CA. 92606
TEL: 949-387-8500, FAX: 949-387-0800

STAMP

REGISTERED PROFESSIONAL ENGINEER — STEVEN M. COULTER — No. E22808 — Exp. 09/30/24 — ELECTRICAL — STATE OF CALIFORNIA

DATE SIGNED 09-23-23

ISSUE

REV.	DESCRIPTION	DATE
	30% CD SET	12/15/23
	60% CD SET	01/19/24
	90% CD SET	02/26/24
1	CLIENT REVISION	04/26/24
2	BID SET	09/10/24
3	BULLETIN #1	10/25/24
4	BULLETIN #1 R1	2/14/25
	COMPOSITE SET	9/24/25

PROJECT IDENTIFICATION

THIS DRAWING WAS CREATED IN AUTODESK AUTOCAD V. 2021 UNLESS OTHERWISE NOTED.

THE ORIGINAL SIZE OF THIS SHEET IS 30" X 42"

THESE DRAWINGS AND SPECIFICATIONS ARE THE PROPERTY AND COPYRIGHT OF IDS GROUP AND SHALL NOT BE USED ON ANY OTHER PROJECT OR LOCATIONS EXCEPT AS DESCRIBED ON THE DRAWINGS, WITHOUT THE WRITTEN AGREEMENT WITH IDS GROUP.

IDS PROJECT NO.	22X099.01
IDS DRAWN BY	SM
IDS CHECKED BY	SM
IDS APPROVED BY	SC

SHEET TITLE

COMMUNITY CENTER LIGHTING AND POWER PLAN

SHEET NUMBER

E-04

SHEET NO. 6 OF 18

CUMULATIVE SHEET NO. XXX OF XXX

PROGRESS SET - NOT FOR CONSTRUCTION

IDS GROUP - FILE LOCATION: S:\PROJECTS\2022\SHARED\22X099.01 LANC - EL DORADO PARK\05 CAD\05 ELEC\2023-12-05-EXISTING CC FILES\E-04_SHEET _05 LIGHTING PLOT DATE: 12/5/2024 7:24:02 PM USER: MICHAEL REED

IDS GROUP - FILE LOCATION: S:\PROJECTS\2022\SHARED\22X099.01 LANC - EL DORADO PARK\05 CAD\05 ELEC\2023-12-05-EXISTING CC FILES\E-04.1._SHEET _05 POWER PLOT DATE: 12/5/2024 7:23:36 PM USER: MICHAEL.REED

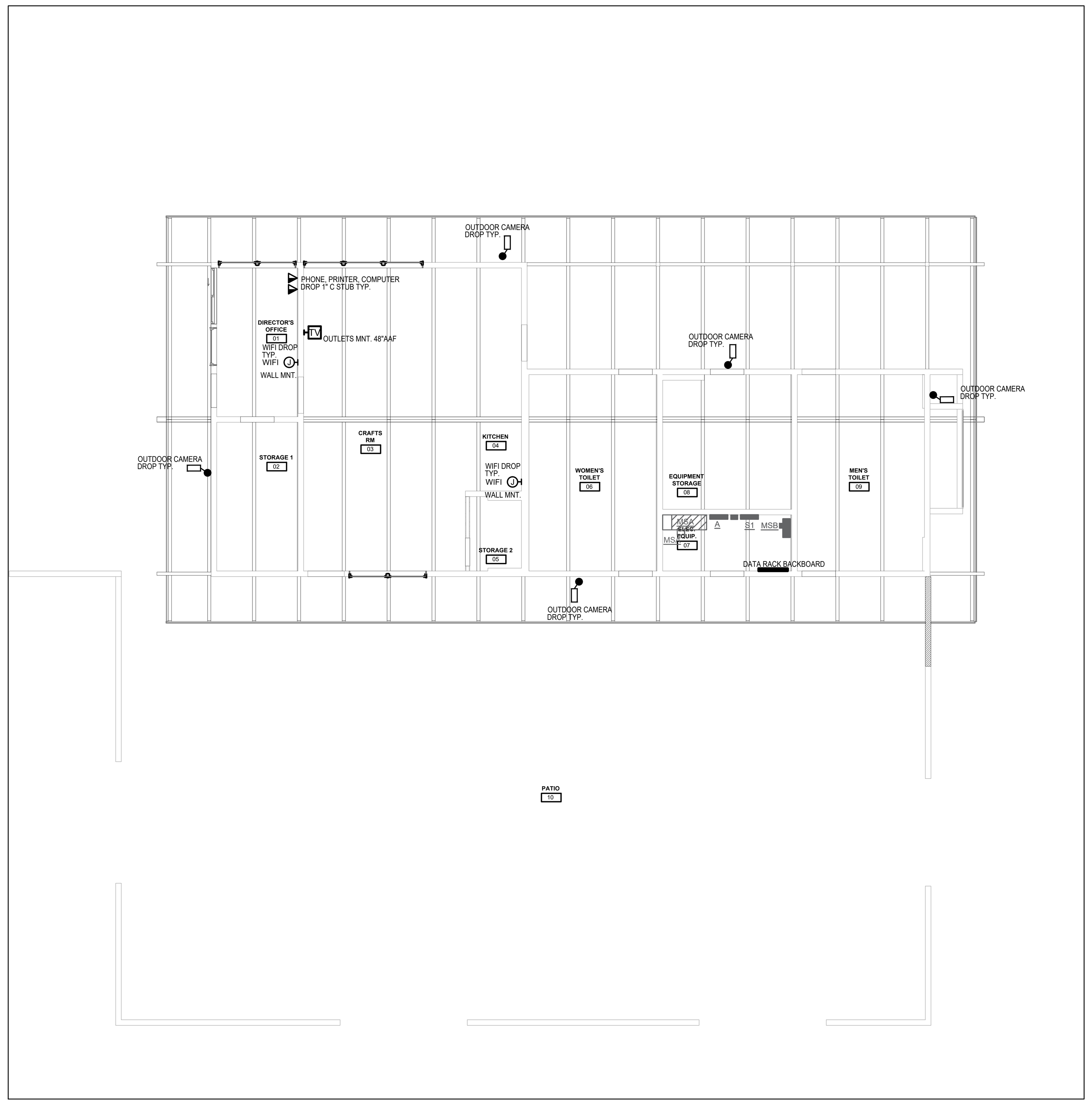

COMMUNITY CENTER LOW VOLTAGE PLAN | 1/8" = 1'-0" | 1

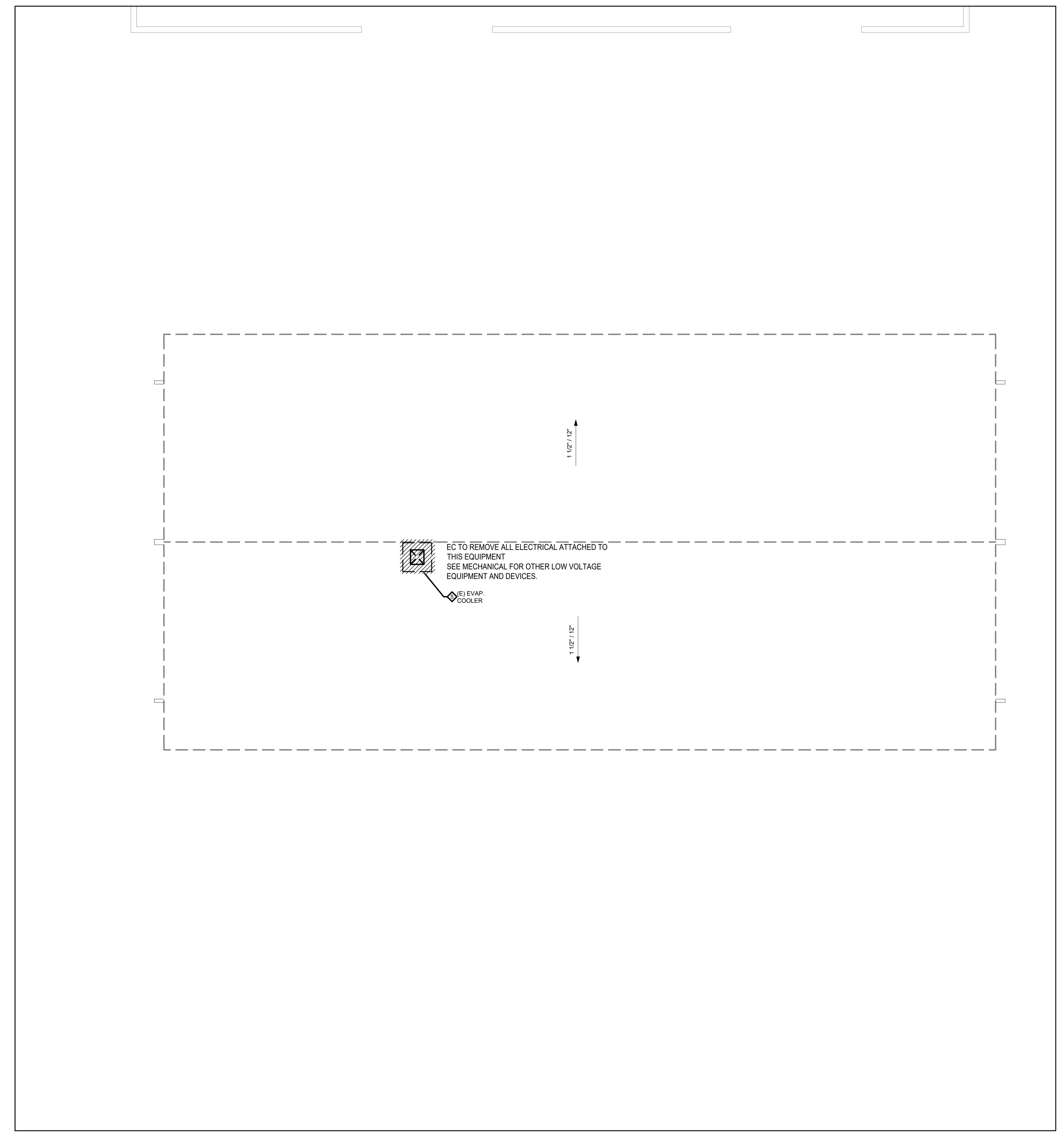

COMMUNITY CENTER DEMO POWER PLAN | 1/8" = 1'-0" | 1

PANEL "A" EXISTING WITH NEW CKT. LOADS

MOUNTING SURFACE | NEMA 3R NO | FEED THRU NO
DOUBLE LUG NO | 200% NO | I/G BUS NO
Volts: 120/240V | Phases: 1 | Wires: 3
MAIN MLO | BUS 225 | A.I.C. 10,000

NOTES	LOADS	CIRC	LOCATION	TRIP	POLES	A	B	A	B	POLES	TRIP	LOCATION	CIRC	LOADS	NOTES
		1	CRAFTS ROOM	20A	1	223		623		1	20A	STORAGE, ELEC. RM., OFFICE & FLOODS	2	L	
	L	3	CRAFTS ROOM	20A	1		480		173	1	20A	EXTERIOR LIGHTS UNDER EAVES	4	L	
	L	5	TOILETS, CONCESSION, TEL. BOOTH	20A	1	240		240		1	20A	CRAFTS RM. & OFFICE	6	L	
	L	7	STORAGE & ELEC. ROOMS	20A	1		470		356	1	20A	CRAFTS ROOM	8	L	
	R	9	GARBAGE DISPOSAL (1/3 HP)	20A	1	760		1200		1	20A	COUNTER MICROWAVE	10	K	
	R	11	CONCESSION	20A	1		600		1200	1	20A	COUNTER MICROWAVE	12	K	
	R	13	EVAPORATIVE CLR (1/4 HP), UNIT HTR (1/8 HP)	20A	1	630		50		1	20A	TIME CLOCKS	14	R	
	R	15	REFRIDGERATOR, EXH. FAN (60W) & PLUGS	20A	1		1200		3540	2	40A	CU-1	16	M	
	R	17	SPRINKLER CONTROLLER	20A	1	100		3540		2	--	CU-1	18	M	
	M	19	EF-1 AND 2	20A	1		936		1500	1	20A	FC-1	20	M	
	R	21	EXISTING LOAD	20A	1	1000		180		1	20A	GFCI OUTLET	22	R	
	R	23	TV OUTLET	20A	1		180		1200	1	20A	DATA RACK	24	R	

	ØA	ØB
TOTAL DEMAND LOAD:	9062	13090
TOTAL DEMAND AMPS:	76	109

69% PERCENT BALANCE

LOAD CLASSIFICATION	CONNECTED LOAD	DEMAND FACTOR	ESTIMATED DEMAND	PANEL LOADS	
CONTINUOUS LOAD = C	0	125%	0		
KITCHEN EQUIPMENT LOAD = K	2400	100%	2400	TOTAL CONN. LOAD (VA):	25438
LIGHTING LOAD = L	2582	125%	3228	TOTAL EST. DEMAND (VA):	27854
MOTOR LOAD = M	14556	100%	16326	TOTAL CONN. (AMPS):	106
NON-CONTINUOUS LOAD = N	0	100%	0	TOTAL EST. DEMAND (AMPS):	116
PANEL LOAD = P	0	100%	0		
RECEPTACLE LOAD = R	5900	100%	5900		

PANEL SCHEDULE NOTES:
1. PROVIDE LOCK-ON DEVICE.
2. PROVIDE LOCK-OFF DEVICE.
3. CIRCUIT BREAKER CONTROLLED BY ANSUL SYSTEM. REFER TO HOOD FIRE SYSTEM INTERLOCK DIAGRAM.
4. PROVIDE GFCI TYPE DEVICE.
5. PROVIDE A RED CIRCUIT BREAKER.
6. PROVIDE A NEW BREAKER TO EXISTING TYPE AND A.I.C. RATING IN PANEL
7. PROVIDE "HACR" TYPE CIRCUIT BREAKER. FOR HVAC EQUIPMENT.
8. PROVIDE PHOTOCELL AND TIME CLOCK CLOCK WITH RELAYS FOR EXTERIO LIGHITNG CONTROL. REFER TO EXTERIOR LIGHTING CONTROL DIAGRAM.
9. EXISTING BREAKER
10. CIRCUIT MADE AVAILABLE THROUGH DEMOLITION

EXISTING PANEL SCHEDULE WITH NEW CONNECTED LOADS

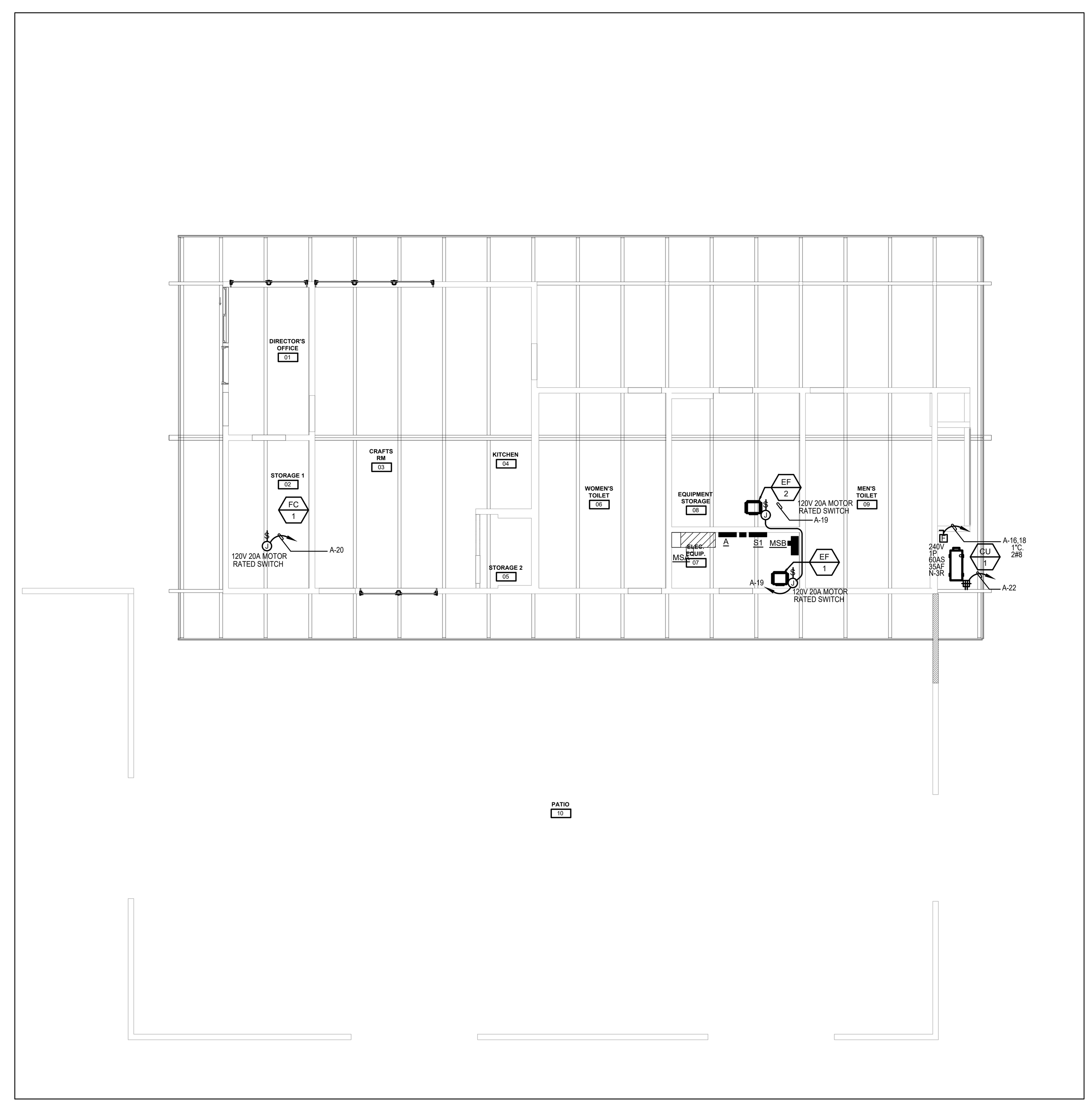

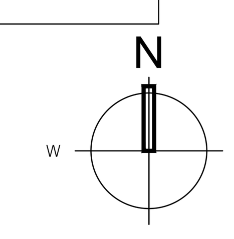

COMMUNITY CENTER NEW POWER PLAN | 1/8" = 1'-0" | 1

GENERAL LIGHTING DEMO NOTES

1. WORK INCLUDED: LABOR, MATERIAL, APPLIANCES, TOOLS, EQUIPMENT, FACILITIES, TRANSPORTATION AND SERVICES NECESSARY AND INCIDENTAL TO PERFORMING OPERATIONS IN CONNECTION WITH THE DEMOLITION, DISPOSAL, TRANSPORTATION AND RECONNECTION OF EXISTING REMAINING EQUIPMENT/DEVICES. COMPLETE AS INDICATED IN THE CONTRACT DOCUMENTS AS SPECIFIED HEREIN.
2. THE FOLLOWING IS INTENDED TO COVER THE COMPLETE DEMOLITION, DISPOSAL, TRANSPORTATION AND RECONNECTION OF EXISTING ELECTRICAL EQUIPMENT. THE OMISSION OF EXPRESSED REFERENCE TO ANY ITEM OF LABOR OR MATERIAL FOR THE PROPER EXECUTION OF THE WORK IN ACCORDANCE WITH PRESENT PRACTICE OF THE TRADE SHALL NOT RELIEVE THE CONTRACTOR FROM PROVIDING SUCH ADDITIONAL LABOR AND MATERIALS.
3. REFER TO THE CONTRACT DOCUMENTS FOR ADDITIONAL DEMOLITION REQUIREMENTS WHICH AFFECT THE PROPER EXECUTION OF THIS WORK. DIAGRAMS AND SYMBOLS SHOWING ELECTRICAL CONNECTIONS ARE DIAGRAMMATIC ONLY. WIRING DIAGRAMS DO NOT NECESSARILY SHOW THE EXACT PHYSICAL ARRANGEMENT OF THE EQUIPMENT.
4. IT IS THE CONTRACTOR'S RESPONSIBILITY TO VISIT THE SITE AND BECOME THOROUGHLY FAMILIAR WITH FEATURES OF THE BUILDING AND SITE WHICH MAY AFFECT THE PROPER PERFORMANCE OF THIS WORK.
5. PORTIONS OF THESE PLANS HAVE BEEN DERIVED FROM INFORMATION TAKEN FROM ORIGINAL ELECTRICAL PLANS. THE INTENT OF THE DRAWINGS AND SPECIFICATIONS IS TO PROVIDE FOR THE REMOVAL AND DISPOSAL OF ELECTRICAL EQUIPMENT, LIGHTING FIXTURES, DEVICES, OUTLET BOXES, CONDUIT, WIRING AS DEFINED HEREIN AND AS INDICATED ELSEWHERE IN THE CONTRACT DOCUMENTS.
6. IT IS UNDERSTOOD AND AGREED THAT THIS CONTRACT DOES NOT CONTEMPLATE THE HANDLING OF ASBESTOS, PCB OR ANY HAZARDOUS WASTE MATERIAL. IF ASBESTOS, PCB OR ANY HAZARDOUS WASTE MATERIAL IS ENCOUNTERED, NOTIFY THE ARCHITECT IMMEDIATELY. DO NOT DISTURB, HANDLE OR ATTEMPT TO REMOVE.
7. THE SCOPE OF DEMOLITION WORK SHALL INCLUDE, BUT IS NOT LIMITED TO THE FOLLOWING:
   a. SUBMIT PROPOSED OUTAGE SCHEDULE. PROVIDE A SEQUENCE OF DEMOLITION TO INSURE THE UNINTERRUPTED USE OF OCCUPIED PORTIONS OF THE FACILITY WHICH ARE TO REMAIN OPERATIONAL DURING THE CONTRACT PERIOD.
   b. SYSTEM OUTAGES SHALL BE PERMITTED ONLY AT TIMES APPROVED BY OWNER, IN WRITING. WORK WHICH COULD RESULT IN A ACCIDENTAL OUTAGE (BEYOND BRANCH CIRCUITS) SHALL BE PERFORMED WITH THE OWNER'S MAINTENANCE PERSONNEL ADVISED OF SUCH WORK.
   c. COORDINATE WITH THE OWNER AND DESIGNATE A PORTION OF THE FACILITY FOR SAFELY STORING REMOVED AND SALVAGED MATERIALS.
   d. REMOVED MATERIALS AND EQUIPMENT WHICH IN THE OPINION OF THE OWNER/ARCHITECT ARE SALVAGEABLE, SHALL REMAIN THE PROPERTY OF THE OWNER. DELIVER SUCH SALVAGED MATERIALS AND EQUIPMENT ON PREMISES AS DIRECTED, NEATLY PILE OR STORE THEM AND PROTECT FROM DAMAGE. DO NOT REUSE MATERIALS AND EQUIPMENT UNLESS SPECIFICALLY INDICATED ON PLANS OR SPECIFIED. REMOVE FROM PREMISES AND DISPOSE OF MATERIALS CONSIDERED BY THE OWNER/ARCHITECT TO BE SCRAP.
   e. AS INDICATED, DISCONNECT AND REMOVE EXISTING LIGHTING FIXTURES, LIGHTING CONTROL DEVICES, HARDWARE, SUPPORT DEVICES AND ASSOCIATED RACEWAYS, CONDUCTORS AND OUTLET BOXES. WHERE OUTLET BOXES ARE FLUSH AND CONDUITS ARE CONCEALED IN EXISTING REMAINING WALLS, REMOVE WIRING, AND ABANDON CONDUIT IN PLACE.
   f. AS INDICATED, DISCONNECT AND REMOVE EXISTING ELECTRICAL EQUIPMENT, DISCONNECT SWITCHES, RECEPTACLES, MOUNTING HARDWARE AND ASSOCIATED RACEWAYS, CONDUCTORS AND OUTLET BOXES. WHERE OUTLET BOXES ARE FLUSH AND CONDUITS ARE CONCEALED IN EXISTING REMAINING WALLS, REMOVE WIRING AND ABANDON CONDUIT IN PLACE.
8. THE CONTRACTOR SHALL FIELD VERIFY EXISTING EQUIPMENT, DEVICES, AND/OR CIRCUITS THAT ARE REMAINING. CIRCUITS SHALL BE RECONNECTED TO NEW OR EXISTING POWER DISTRIBUTION EQUIPMENT AND FUNCTION IN THE MANNER THEY WERE ORIGINALLY DESIGNED. PROVIDE ADDITIONAL EQUIPMENT, DEVICES, OUTLET BOXES, CONDUIT, WIRING AS REQUIRED TO RESTORE CONTINUITY TO THESE CIRCUITS.
9. WHERE EQUIPMENT, DEVICES ARE SPECIFIED BY THE CONTRACT DOCUMENTS FOR REMOVAL, THE CONTRACTOR SHALL REMOVE CIRCUIT CONDUCTORS/CABLING BACK TO THE NEAREST REMAINING JUNCTION BOX AND/OR POINT OF TERMINATION.
10. RELOCATE EXISTING CONDUITS AND/OR CONDUCTORS/CABLING ROUTING THROUGH AREAS WHERE NEW PLENUMS AND/OR ROOF OPENINGS ARE SPECIFIED.
11. RELOCATION AND/OR REMOVAL OF EXISTING EQUIPMENT, DEVICES, OUTLET BOXES, CONDUIT, WIRING MAY AFFECT THE OPERATION OF EXISTING, REMAINING ELECTRICAL EQUIPMENT/DEVICES. THE CONTRACTOR SHALL PROVIDE ADDITIONAL MATERIALS AS REQUIRED TO MAINTAIN AND/OR RESTORE CONTINUITY OF SERVICE TO EXISTING, REMAINING ELECTRICAL/DEVICES.
12. PROVIDE NECESSARY DEMOLITION TO REMOVE EXISTING UNUSED RACEWAYS, CONDUCTORS, CABLING, OUTLET BOXES, RECEPTACLES, SWITCHES, EQUIPMENT.
13. DISCONNECT ABANDONED CIRCUITS AT EXISTING PANELBOARDS AND REMOVE WIRE TO LAST REMAINING DEVICE. LABEL ABANDONED CIRCUIT BREAKERS "SPARE".
14. EXISTING CIRCUITS THAT ARE REMOVED AND ARE NOT RE-USED SHALL BE IDENTIFIED ON THE PANEL DIRECTORY AS 'SPARE'.

APPROVAL

CITY APPROVED BY:
DIRECTOR OF PUBLIC WORKS DATE
CITY REVIEWED BY:
SENIOR ENGINEER DATE
SUBMITTED BY:
DATE

CLIENT
LANCASTER
Creating a better tomorrow. Together.
CITY OF LANCASTER
44933 FERN AVENUE
LANCASTER, CA 93534

PROJECT NAME
SAMARITAN'S PURSE PARK FORMERLY KNOWN AS EL DORADO PARK RENOVATION
PWCP NO. 24-008
44501 5th STREET EAST
LANCASTER, CA 93535

ENGINEER/ARCHITECT
IDS
IDS GROUP
1 PETERS CANYON ROAD, SUITE 130
IRVINE, CA. 92606
TEL: 949-387-8500, FAX: 949-387-0800

STAMP
REGISTERED PROFESSIONAL ENGINEER
STEVEN M. COLLINS
No. E22808
Exp. 06-30-25
ELECTRICAL
STATE OF CALIFORNIA
DATE SIGNED 09-23-23

ISSUE

REV.	DESCRIPTION	DATE
	30% CD SET	12/15/23
	60% CD SET	01/19/24
	90% CD SET	02/26/24
1	CLIENT REVISION	04/26/24
2	BID SET	09/10/24
3	BULLETIN #1	10/25/24
4	BULLETIN #1 R1	2/14/25
	COMPOSITE SET	9/24/25

PROJECT IDENTIFICATION
THIS DRAWING WAS CREATED IN AUTODESK AUTOCAD V. 2021 UNLESS OTHERWISE NOTED.
THE ORIGINAL SIZE OF THIS SHEET IS 30" X 42"
THESE DRAWINGS AND SPECIFICATIONS ARE THE PROPERTY AND COPYRIGHT OF IDS GROUP AND SHALL NOT BE USED ON ANY OTHER PROJECT OR LOCATIONS EXCEPT AS DESCRIBED ON THE DRAWINGS, WITHOUT THE WRITTEN AGREEMENT WITH IDS GROUP.

IDS PROJECT NO.	22X099.01
IDS DRAWN BY	SM
IDS CHECKED BY	SM
IDS APPROVED BY	SC

SHEET TITLE
COMMUNITY CENTER POWER AND LOW-VOLTAGE PLAN

SHEET NUMBER
E-04.1
SHEET NO. 6 OF 18
CUMULATIVE SHEET NO. XXX OF XXX

PROGRESS SET - NOT FOR CONSTRUCTION

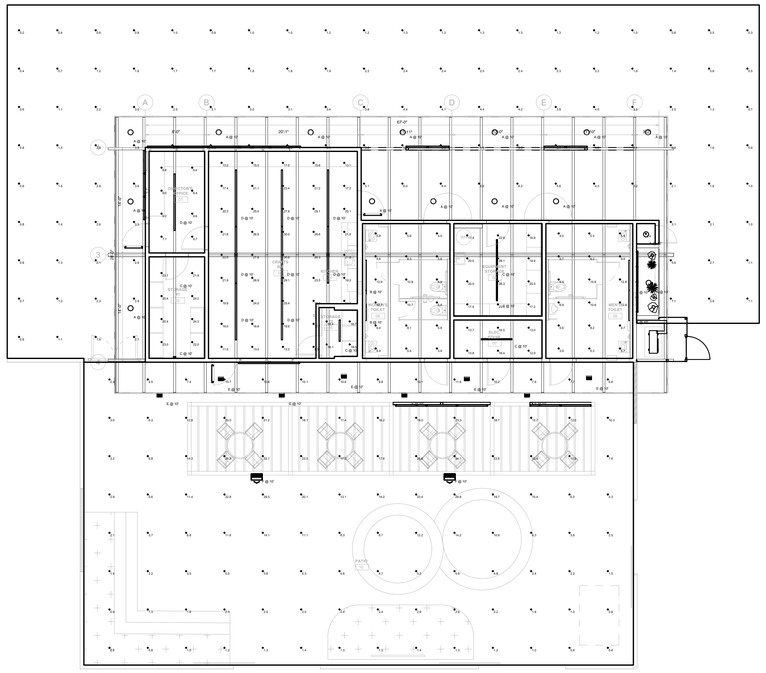

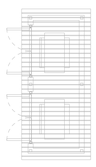

Schedule

Symbol	Label	Image	QTY (1)	Manufacturer	Catalog	Description	Number Lamps	Lamp Lumens	LLF	Input Watts	Polar Plot
	A		1	Lumitile Outside Inc	DWBR3/LED	Dome - Surface Square 40W	1	4000	0.85	40W	
	B		4	Luminaire LED	CCWR WFT 50W 4K	CARWR WFT 50W 4000K CLEAR POLYCARB LENS	1	5982	0.85	54.53	
	C		6	Lithonia Lighting	CLX L 48N 30BLK FTD P10 1 MVOLT DWB	CLX LED WF 5000 Lumens Frosted DiffLens POLY 1 MVOLT DWB	1	5041	0.85	40.5W	
	D		9	WAFER LIGHTING	DE2050	WAFER 5.5"DIA X 4"H LED LUMINAIRE DIFFUSED LENS	1	3710	0.85	31.1	
	E		8	Lithonia Lighting	WDGE1 LED P3 50K	WDGE1 LED WITH P3 - PERFORMANCE PACKAGE 5000K	1	3414	0.85	24.5W/F	
	F		2	PHILIPS	PTL2.0 40W 4000K		1	4000	0.85	35.1W	

Statistics

Description	Symbol	Avg	Max	Min	Max/Min	Avg/Min
Courtyard Area	+	2.00 fc	20.0 fc	0.0 fc	20.0	1.00
Directors Office	+	19.0 fc	19.0 fc	19.0 fc	1.0	1.0
Exercise Area	+	29.0 fc	29.0 fc	29.0 fc	1.0	1.0
Exercise Storage	+	29.0 fc	29.0 fc	29.0 fc	1.0	1.0
Hall Corridor	+	17.0 fc	17.0 fc	17.0 fc	1.0	1.0
Men Toilet	+	17.0 fc	17.0 fc	17.0 fc	1.0	1.0
Packaging	+	29.0 fc	29.0 fc	29.0 fc	1.0	1.0
Storage Area	+	29.0 fc	29.0 fc	29.0 fc	1.0	1.0
Storage Area #2	+	29.0 fc	29.0 fc	29.0 fc	1.0	1.0
Women Toilet	+	17.0 fc	17.0 fc	17.0 fc	1.0	1.0
Work Area #1	+	29.0 fc	29.0 fc	29.0 fc	1.0	1.0

GENERAL LIGHTING DEMO NOTES

1. WORK INCLUDED: LABOR, MATERIAL, APPLIANCES, TOOLS, EQUIPMENT, FACILITIES, TRANSPORTATION AND SERVICES NECESSARY AND INCIDENTAL TO PERFORMING OPERATIONS IN CONNECTION WITH THE DEMOLITION, DISPOSAL, TRANSPORTATION AND RECONNECTION OF EXISTING REMAINING EQUIPMENT/DEVICES. COMPLETE AS INDICATED IN THE CONTRACT DOCUMENTS AS SPECIFIED HEREIN.

2. THE FOLLOWING IS INTENDED TO COVER THE COMPLETE DEMOLITION, DISPOSAL, TRANSPORTATION AND RECONNECTION OF EXISTING ELECTRICAL EQUIPMENT. THE OMISSION OF EXPRESSED REFERENCE TO ANY ITEM OF LABOR OR MATERIAL FOR THE PROPER EXECUTION OF THE WORK IN ACCORDANCE WITH PRESENT PRACTICE OF THE TRADE SHALL NOT RELIEVE THE CONTRACTOR FROM PROVIDING SUCH ADDITIONAL LABOR AND MATERIALS.

3. REFER TO THE CONTRACT DOCUMENTS FOR ADDITIONAL DEMOLITION REQUIREMENTS WHICH AFFECT THE PROPER EXECUTION OF THIS WORK. DIAGRAMS AND SYMBOLS SHOWING ELECTRICAL CONNECTIONS ARE DIAGRAMMATIC ONLY. WIRING DIAGRAMS DO NOT NECESSARILY SHOW THE EXACT PHYSICAL ARRANGEMENT OF THE EQUIPMENT.

4. IT IS THE CONTRACTOR'S RESPONSIBILITY TO VISIT THE SITE AND BECOME THOROUGHLY FAMILIAR WITH FEATURES OF THE BUILDING AND SITE WHICH MAY AFFECT THE PROPER PERFORMANCE OF THIS WORK.

5. PORTIONS OF THESE PLANS HAVE BEEN DERIVED FROM INFORMATION TAKEN FROM ORIGINAL ELECTRICAL PLANS. THE INTENT OF THE DRAWINGS AND SPECIFICATIONS IS TO PROVIDE FOR THE REMOVAL AND DISPOSAL OF ELECTRICAL EQUIPMENT, LIGHTING FIXTURES, DEVICES, OUTLET BOXES, CONDUIT, WIRING AS DEFINED HEREIN AND AS INDICATED ELSEWHERE IN THE CONTRACT DOCUMENTS.

6. IT IS UNDERSTOOD AND AGREED THAT THIS CONTRACT DOES NOT CONTEMPLATE THE HANDLING OF ASBESTOS, PCB OR ANY HAZARDOUS WASTE MATERIAL. IF ASBESTOS, PCB OR ANY HAZARDOUS WASTE MATERIAL IS ENCOUNTERED, NOTIFY THE ARCHITECT IMMEDIATELY. DO NOT DISTURB, HANDLE OR ATTEMPT TO REMOVE.

7. THE SCOPE OF DEMOLITION WORK SHALL INCLUDE, BUT IS NOT LIMITED TO THE FOLLOWING:

   a. SUBMIT PROPOSED OUTAGE SCHEDULE. PROVIDE A SEQUENCE OF DEMOLITION TO INSURE THE UNINTERRUPTED USE OF OCCUPIED PORTIONS OF THE FACILITY WHICH ARE TO REMAIN OPERATIONAL DURING THE CONTRACT PERIOD.
   b. SYSTEM OUTAGES SHALL BE PERMITTED ONLY AT TIMES APPROVED BY OWNER, IN WRITING. WORK WHICH COULD RESULT IN A ACCIDENTAL OUTAGE (BEYOND BRANCH CIRCUITS) SHALL BE PERFORMED WITH THE OWNER'S MAINTENANCE PERSONNEL ADVISED OF SUCH WORK.
   c. COORDINATE WITH THE OWNER AND DESIGNATE A PORTION OF THE FACILITY FOR SAFELY STORING REMOVED AND SALVAGED MATERIALS.
   d. REMOVED MATERIALS AND EQUIPMENT WHICH IN THE OPINION OF THE OWNER/ARCHITECT ARE SALVAGEABLE, SHALL REMAIN THE PROPERTY OF THE OWNER. DELIVER SUCH SALVAGED MATERIALS AND EQUIPMENT ON PREMISES AS DIRECTED, NEATLY PILE OR STORE THEM AND PROTECT FROM DAMAGE. DO NOT REUSE MATERIALS AND EQUIPMENT UNLESS SPECIFICALLY INDICATED ON PLANS OR SPECIFIED. REMOVE FROM PREMISES AND DISPOSE OF MATERIALS CONSIDERED BY THE OWNER/ARCHITECT TO BE SCRAP.
   e. AS INDICATED, DISCONNECT AND REMOVE EXISTING LIGHTING FIXTURES, LIGHTING CONTROL DEVICES, HARDWARE, SUPPORT DEVICES AND ASSOCIATED RACEWAYS, CONDUCTORS AND OUTLET BOXES. WHERE OUTLET BOXES ARE FLUSH AND CONDUITS ARE CONCEALED IN EXISTING REMAINING WALLS, REMOVE WIRING, AND ABANDON CONDUIT IN PLACE.
   f. AS INDICATED, DISCONNECT AND REMOVE EXISTING ELECTRICAL EQUIPMENT, DISCONNECT SWITCHES, RECEPTACLES, MOUNTING HARDWARE AND ASSOCIATED RACEWAYS, CONDUCTORS AND OUTLET BOXES. WHERE OUTLET BOXES ARE FLUSH AND CONDUITS ARE CONCEALED IN EXISTING REMAINING WALLS, REMOVE WIRING AND ABANDON CONDUIT IN PLACE.

8. THE CONTRACTOR SHALL FIELD VERIFY EXISTING EQUIPMENT, DEVICES, AND/OR CIRCUITS THAT ARE REMAINING. CIRCUITS SHALL BE RECONNECTED TO NEW OR EXISTING POWER DISTRIBUTION EQUIPMENT AND FUNCTION IN THE MANNER THEY WERE ORIGINALLY DESIGNED. PROVIDE ADDITIONAL EQUIPMENT, DEVICES, OUTLET BOXES, CONDUIT, WIRING AS REQUIRED TO RESTORE CONTINUITY TO THESE CIRCUITS.

9. WHERE FIXTURES, EQUIPMENT, DEVICES ARE SPECIFIED BY THE CONTRACT DOCUMENTS FOR REMOVAL, THE CONTRACTOR SHALL REMOVE CIRCUIT CONDUCTORS/CABLING BACK TO THE NEAREST REMAINING JUNCTION BOX AND/OR POINT OF TERMINATION.

10. RELOCATE EXISTING CONDUITS AND/OR CONDUCTORS/CABLING ROUTING THROUGH AREAS WHERE NEW PLENUMS AND/OR ROOF OPENINGS ARE SPECIFIED.

11. RELOCATION AND/OR REMOVAL OF EXISTING EQUIPMENT, DEVICES, OUTLET BOXES, CONDUIT, WIRING MAY AFFECT THE OPERATION OF EXISTING, REMAINING ELECTRICAL EQUIPMENT/DEVICES. THE CONTRACTOR SHALL PROVIDE ADDITIONAL MATERIALS AS REQUIRED TO MAINTAIN AND/OR RESTORE CONTINUITY OF SERVICE TO EXISTING, REMAINING ELECTRICAL/DEVICES.

12. PROVIDE NECESSARY DEMOLITION TO REMOVE EXISTING UNUSED RACEWAYS, CONDUCTORS, CABLING, OUTLET BOXES, RECEPTACLES, SWITCHES, EQUIPMENT.

13. DISCONNECT ABANDONED CIRCUITS AT EXISTING PANELBOARDS AND REMOVE WIRE TO LAST REMAINING DEVICE. LABEL ABANDONED CIRCUIT BREAKERS "SPARE".

14. EXISTING CIRCUITS THAT ARE REMOVED AND ARE NOT RE-USED SHALL BE IDENTIFIED ON THE PANEL DIRECTORY AS 'SPARE'.

DEMO NOTES

1. DISCONNECT, REMOVE AND REPLACE EXISTING LIGHT FIXTURE FROM EXISTING ROOM SWITCH-LEGS. CONSTANT HOT CIRCUITING SHALL REMAIN AS IS.
   VERIFY EXACT CIRCUIT NUMBER IN FIELD.
2. ALL EXISTING EXIT SIGN LUMINAIRES ARE TO REMAIN AND ARE NOT A PART OF THIS PERMIT SET..
3. EXISTING EMERGENCY FIXTURES SHALL BE REPLACED WITH NEW FIXTURES, AND TO REMAIN ON THE EMERGENCY LIGHT CIRCUIT.
4. ALL EXISTING FLOOR TO FLOOR LIGHTING CIRCUITRY ARE EXISTING TO REMAIN TO BE REUSED TO CONNECT TO NEW FIXTURES.
5. THESE PLANS HAVE BEEN DERIVED FROM THE AS-BUILT PLANS AND FROM ON SITE OBSERVATION / CONDITION ARE EXISTING AND SHALL BE VERIFIED BY THE CONTRACTOR..
6. CIRCUIT NUMBERS PROVIDED ON THESE DOCUMENTS ARE EXISTING, AND HAVE BEEN DERIVED FROM AS-BUILT DRAWINGS.
7. CONTRACTOR SHALL COORDINATE LOCK OUT, TAG OUT PROCEDURE WITH OWNERS ENGINEERING MANAGEMENT PRIOR TO WORKING OR DE ENERGIZING.

N
W E
S

COMMUNITY CENTER LIGHTING PHOTOMETRIC STUDY | 1/8" = 1'-0" | 1

APPROVAL

CITY APPROVED BY:

DIRECTOR OF PUBLIC WORKS DATE

CITY REVIEWED BY:

SENIOR ENGINEER DATE

SUBMITTED BY:

DATE

CLIENT

LANCASTER
Creating a better tomorrow. Together.

CITY OF LANCASTER

44933 FERN AVENUE
LANCASTER, CA 93534

PROJECT NAME

SAMARITAN'S PURSE PARK FORMERLY KNOWN AS EL DORADO PARK RENOVATION

PWCP NO. 24-008

44501 5th STREET EAST
LANCASTER, CA 93535

ENGINEER/ARCHITECT

IDS

IDS GROUP

1 PETERS CANYON ROAD, SUITE 130
IRVINE, CA. 92606
TEL: 949-387-8500, FAX: 949-387-0800

STAMP

REGISTERED PROFESSIONAL ENGINEER
STEVEN M. COLLINS
No. E22808
Exp. 06-30-24
ELECTRICAL
STATE OF CALIFORNIA

DATE SIGNED 09-23-23

ISSUE

REV.	DESCRIPTION	DATE
	30% CD SET	12/15/23
	60% CD SET	01/19/24
	90% CD SET	02/26/24
1	CLIENT REVISION	04/26/24
2	BID SET	09/10/24
3	BULLETIN #1	10/25/24
4	BULLETIN #1 R1	2/14/25
	COMPOSITE SET	9/24/25

PROJECT IDENTIFICATION

THIS DRAWING WAS CREATED IN AUTODESK AUTOCAD V. 2021 UNLESS OTHERWISE NOTED.

THE ORIGINAL SIZE OF THIS SHEET IS 30" X 42"

THESE DRAWINGS AND SPECIFICATIONS ARE THE PROPERTY AND COPYRIGHT OF IDS GROUP AND SHALL NOT BE USED ON ANY OTHER PROJECT OR LOCATIONS EXCEPT AS DESCRIBED ON THE DRAWINGS, WITHOUT THE WRITTEN AGREEMENT WITH IDS GROUP.

IDS PROJECT NO.	22X099.01
IDS DRAWN BY	SM
IDS CHECKED BY	SM
IDS APPROVED BY	SC

SHEET TITLE

COMMUNITY CENTERS LIGHTING PHOTOMETRIC STUDY

SHEET NUMBER

E-04.2

SHEET NO. 7 OF 18

CUMULATIVE SHEET NO. XXX OF XXX

PROGRESS SET - NOT FOR CONSTRUCTION

IDS GROUP - FILE LOCATION: S:\PROJECTS\2022\SHARED\22X099.01 LANC - EL DORADO PARK\05 CAD\05 ELEC\2023-12-05-EXISTING CC FILES\E-04.2_SHEET 06 PHOTO METRIC PLOT DATE: 12/5/2024 7:23:42 PM USER: MICHAEL.REED

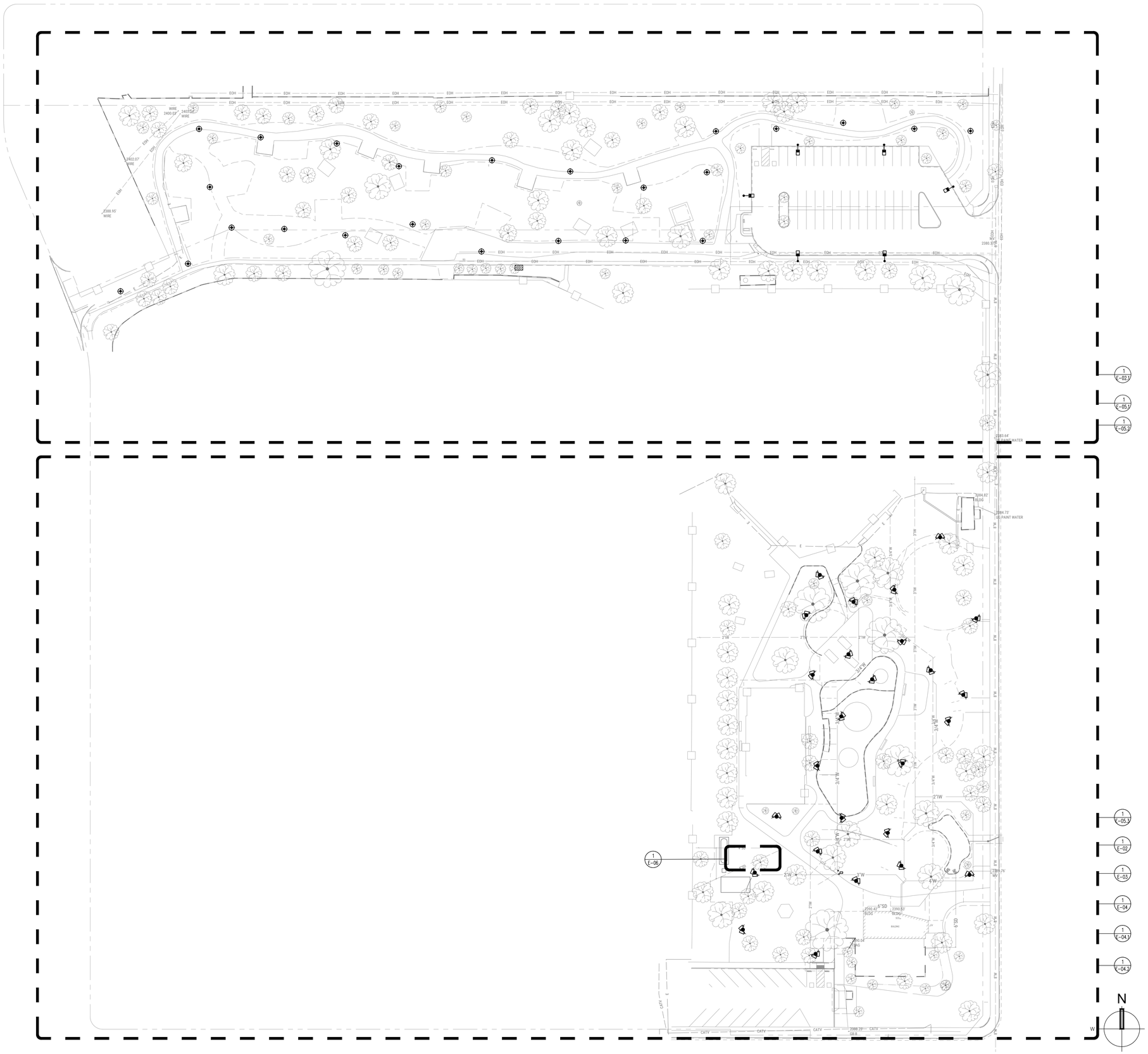

OVERALL ELECTRICAL SITE PLAN | 1" = 40' | 1

GENERAL NOTES

1. REFER TO SINGLE LINE DIAGRAM FOR CONDUIT AND WIRE SIZES FOR SWITCHBOARDS, PANELBOARDS AND TRANSFORMERS.
2. ELECTRICAL DISTRIBUTION EQUIPMENT SHOWN ARE BASED ON INDUSTRY STANDARD SIZES. CONTRACTOR SHALL VERIFY THAT THE FINAL EQUIPMENT SELECTION FITS IN THE ALLOCATED SPACE.
3. SITE LIGHTING SHALL BE 2#8, 1#8 GND IN A 1"C U.N.O. ALL EXTERIOR BUILDING MOUNTED LIGHTING SHALL BE 2#8, 1#8 GND IN A 3/4"C U.N.O.
4. REFERENCE LANDSCAPE ARCHITECTS DRAWINGS FOR ADDITIONAL INFORMATION.
5. ROUTE EXTERIOR LIGHTING TO PANEL INDICATED VIA LIGHTING CONTACTOR. REFER TO CONTACTOR SCHEDULE FOR MORE INFORMATION.
6. REFER TO POWER COMPANY DRAWINGS FOR EXACT TRANSFORMER LOCATION AND ADDITIONAL REQUIREMENTS. PROVIDE BOLLARDS AS REQUIRED BY POWER COMPANY FOR TRANSFORMER IMPACT PROTECTION.
7. UNDERGROUND CONDUIT SHALL BE INSTALLED A MINIMUM OF 24" BELOW FINISHED GRADE, UNLESS REQUIRED OTHERWISE.
8. EXTERIOR MOUNTED ELECTRICAL DEVICES SHALL BE IN NEMA 3R ENCLOSURES.
9. CONTRACTOR SHALL INCLUDE IN HIS BID THE COST OF CONDUIT, TRENCHING, AND BACKFILLING FROM THE SERVICE SWITCHBOARD TO THE UTILITY TRANSFORMER LOCATION SHOWN.
10. EXTERIOR RECEPTACLES SHALL BE "WEATHERPROOF WHILE IN USE" U.N.O.
11. PULLBOXES SHALL BE NO. 3-1/2 U.N.O.

APPROVAL

CITY APPROVED BY:

DIRECTOR OF PUBLIC WORKS — DATE

CITY REVIEWED BY:

SENIOR ENGINEER — DATE

SUBMITTED BY:

DATE

CLIENT

LANCASTER
Creating a better tomorrow. Together.

CITY OF LANCASTER

44933 FERN AVENUE
LANCASTER, CA 93534

PROJECT NAME

SAMARITAN'S PURSE PARK FORMERLY KNOWN AS EL DORADO PARK RENOVATION

PWCP NO. 24-008

44501 5th STREET EAST
LANCASTER, CA 93535

ENGINEER/ARCHITECT

IDS

IDS GROUP

1 PETERS CANYON ROAD, SUITE 130
IRVINE, CA. 92606
TEL: 949-387-8500, FAX: 949-387-0800

STAMP

REGISTERED PROFESSIONAL ENGINEER
STEVEN M COUTRO
No. E22808
Exp. 06-30-24
ELECTRICAL
STATE OF CALIFORNIA

DATE SIGNED 09-23-23

ISSUE

REV.	DESCRIPTION	DATE
	30% CD SET	12/15/23
	60% CD SET	01/19/24
	90% CD SET	02/26/24
1	CLIENT REVISION	04/26/24
2	BID SET	09/10/24
3	BULLETIN #1	10/25/24
4	BULLETIN #1 R1	2/14/25
	COMPOSITE SET	9/24/25

PROJECT IDENTIFICATION

THIS DRAWING WAS CREATED IN AUTODESK AUTOCAD V. 2021 UNLESS OTHERWISE NOTED.

THE ORIGINAL SIZE OF THIS SHEET IS 30" X 42"

THESE DRAWINGS AND SPECIFICATIONS ARE THE PROPERTY AND COPYRIGHT OF IDS GROUP AND SHALL NOT BE USED ON ANY OTHER PROJECT OR LOCATIONS EXCEPT AS DESCRIBED ON THE DRAWINGS, WITHOUT THE WRITTEN AGREEMENT WITH IDS GROUP.

IDS PROJECT NO.	22X099.01
IDS DRAWN BY	SM
IDS CHECKED BY	SM
IDS APPROVED BY	SC

SHEET TITLE

OVERALL ELECTRICAL SITE PLAN REFERENCE PLAN

SHEET NUMBER

E-05

SHEET NO. 8 OF 18

CUMULATIVE SHEET NO. XXX OF XXX

PROGRESS SET - NOT FOR CONSTRUCTION

IDS GROUP - FILE LOCATION: S:\PROJECTS\2022\SHARED\22X099.01 LANC - EL DORADO PARK\05 CAD\05 ELEC\2023-12-05-EXISTING CC FILES\E-05_SHEET 07_OVERALL SITE PLAN PLOT DATE: 12/5/2024 7:23:58 PM USER: MICHAEL.REED

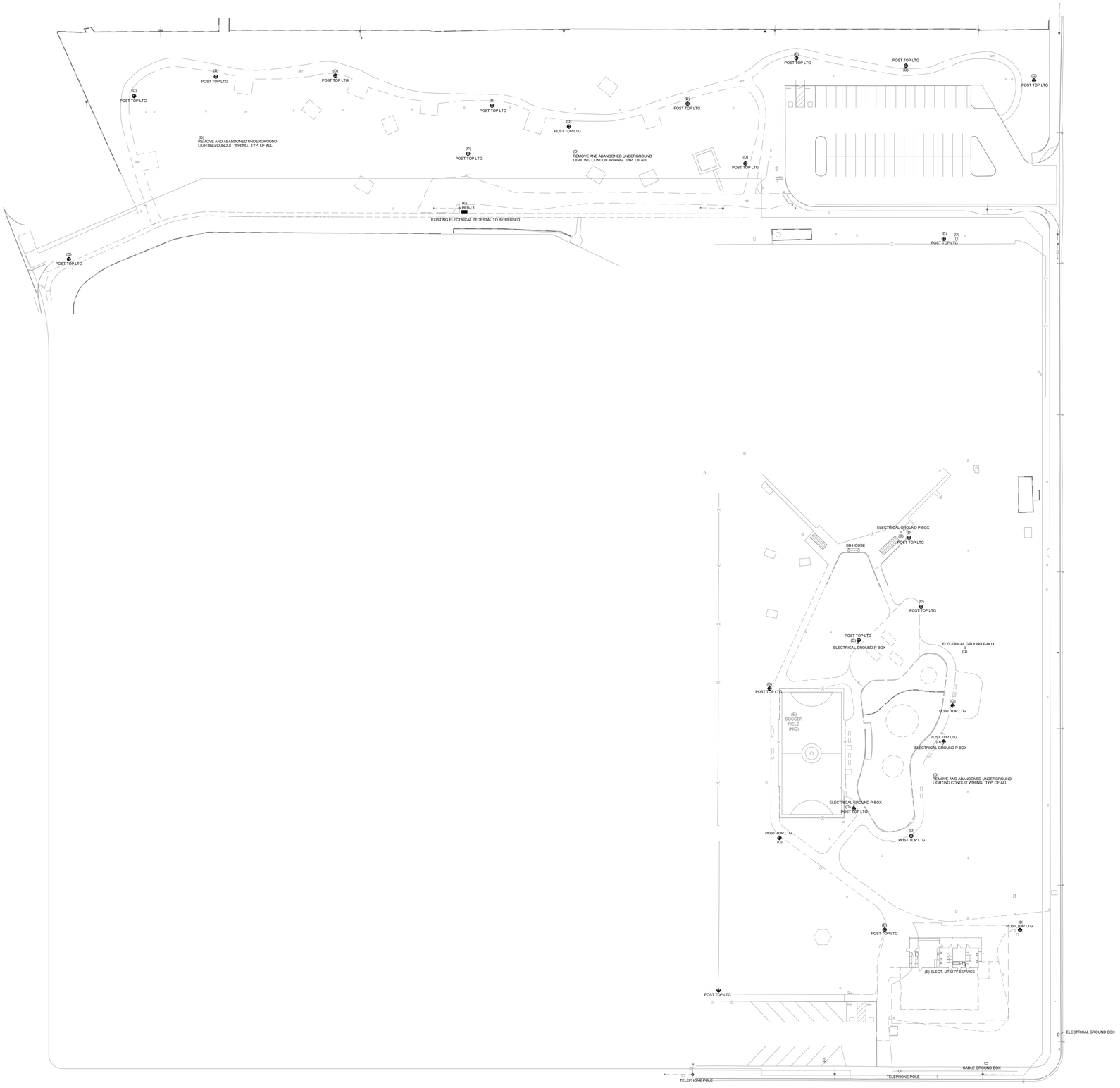

GENERAL NOTES

1. REFER TO SINGLE LINE DIAGRAM FOR CONDUIT AND WIRE SIZES FOR SWITCHBOARDS, PANELBOARDS AND TRANSFORMERS.
2. ELECTRICAL DISTRIBUTION EQUIPMENT SHOWN ARE BASED ON INDUSTRY STANDARD SIZES. CONTRACTOR SHALL VERIFY THAT THE FINAL EQUIPMENT SELECTION FITS IN THE ALLOCATED SPACE.
3. SITE LIGHTING SHALL BE 2#8, 1#8 GND IN A 1"C U.N.O. ALL EXTERIOR BUILDING MOUNTED LIGHTING SHALL BE 2#8, 1#8 GND IN A 3/4"C U.N.O.
4. REFERENCE LANDSCAPE ARCHITECTS DRAWINGS FOR ADDITIONAL INFORMATION.
5. ROUTE EXTERIOR LIGHTING TO PANEL INDICATED VIA LIGHTING CONTACTOR. REFER TO CONTACTOR SCHEDULE FOR MORE INFORMATION.
6. REFER TO POWER COMPANY DRAWINGS FOR EXACT TRANSFORMER LOCATION AND ADDITIONAL REQUIREMENTS. PROVIDE BOLLARDS AS REQUIRED BY POWER COMPANY FOR TRANSFORMER IMPACT PROTECTION.
7. UNDERGROUND CONDUIT SHALL BE INSTALLED A MINIMUM OF 24" BELOW FINISHED GRADE, UNLESS REQUIRED OTHERWISE.
8. EXTERIOR MOUNTED ELECTRICAL DEVICES SHALL BE IN NEMA 3R ENCLOSURES.
9. CONTRACTOR SHALL INCLUDE IN BID THE COST OF CONDUIT, TRENCHING, AND BACKFILLING FROM THE SERVICE SWITCHBOARD TO THE UTILITY TRANSFORMER LOCATION SHOWN.
10. EXTERIOR RECEPTACLES SHALL BE "WEATHERPROOF WHILE IN USE" U.N.O.
11. PULL BOXES SHALL BE SIZED TO MEET THE MINIMUM WIRE PULL REQUIRED BY NEC, U.N.O.

OVERALL ELECTRICAL SITE DEMO PLAN | 1" = 40' | 1

APPROVAL

CITY APPROVED BY:

DIRECTOR OF PUBLIC WORKS — DATE

CITY REVIEWED BY:

SENIOR ENGINEER — DATE

SUBMITTED BY:

DATE

CLIENT

LANCASTER
Creating a better tomorrow. Together.

CITY OF LANCASTER

44933 FERN AVENUE
LANCASTER, CA 93534

PROJECT NAME

SAMARITAN'S PURSE PARK FORMERLY KNOWN AS EL DORADO PARK RENOVATION

PWCP NO. 24-008

44501 5th STREET EAST
LANCASTER, CA 93535

ENGINEER/ARCHITECT

IDS

IDS GROUP

1 PETERS CANYON ROAD, SUITE 130
IRVINE, CA. 92606
TEL: 949-387-8500, FAX: 949-387-0800

STAMP

REGISTERED PROFESSIONAL ENGINEER
STEVEN M. COLLTON
No. E22808
Exp. 06/30/24
ELECTRICAL
STATE OF CALIFORNIA

DATE SIGNED 09-23-23

ISSUE

REV.	DESCRIPTION	DATE
	30% CD SET	12/15/23
	60% CD SET	01/19/24
	90% CD SET	02/26/24
1	CLIENT REVISION	04/26/24
2	BID SET	09/10/24
3	BULLETIN #1	10/25/24
4	BULLETIN #1 R1	2/14/25
	COMPOSITE SET	9/24/25

PROJECT IDENTIFICATION

THIS DRAWING WAS CREATED IN AUTODESK AUTOCAD V. 2021 UNLESS OTHERWISE NOTED.

THE ORIGINAL SIZE OF THIS SHEET IS 30" X 42"

THESE DRAWINGS AND SPECIFICATIONS ARE THE PROPERTY AND COPYRIGHT OF IDS GROUP AND SHALL NOT BE USED ON ANY OTHER PROJECT OR LOCATIONS EXCEPT AS DESCRIBED ON THE DRAWINGS, WITHOUT THE WRITTEN AGREEMENT WITH IDS GROUP.

IDS PROJECT NO.	22X099.01
IDS DRAWN BY	SM
IDS CHECKED BY	SM
IDS APPROVED BY	SC

SHEET TITLE

OVERALL ELECTRICAL SITE DEMO PLAN

SHEET NUMBER

E-05.1

SHEET NO. 9 OF 18

CUMULATIVE SHEET NO. XXX OF XXX

PROGRESS SET - NOT FOR CONSTRUCTION

IDS GROUP - FILE LOCATION: S:\PROJECTS\2022\SHARED\22X099.01 LANC - EL DORADO PARK\05 CAD\05 ELEC\2023-12-05-EXISTING CC FILES\E-05.1_SHEET 08 DEMO SITE PLAN PLOT DATE: 12/5/2024 7:24:09 PM USER: MICHAEL.REED

GENERAL NOTES

- SF2 — SF2 - WORKOUT PATH POST LIGHT FIXTURE WITH OCC / PHOTO SENSORS WITH 16FT POLE
- SF3 — SF3 - PARKING LOT POST LIGHT FIXTURE WITH OCC / PHOTO SENSORS WITH 20FT POLE
- DOUBLE DIRECTIONAL CAMERAS MOUNTED ON SINGLE LIGHT POLE. POLE HEIGHT T.B.D. ON CAMERA REQUIREMENTS.
- SINGLE DIRECTIONAL CAMERA MOUNTED ON SINGLE LIGHT POLE. POLE HEIGHT T.B.D. ON CAMERA REQUIREMENTS.
- SINGLE DIRECTIONAL CAMERA LICENSES PLATE READER MOUNTED ON SINGLE POLE. POLE HEIGHT T.B.D. ON CAMERA REQUIREMENTS.
- GROUND HOLE "C" FOR COMMUNICATION ONLY.
- GROUND HOLE "P FOR POWER ONLY.

GENERAL NOTES

1. REFER TO SINGLE LINE DIAGRAM FOR CONDUIT AND WIRE SIZES FOR SWITCHBOARDS, PANELBOARDS AND TRANSFORMERS.
2. ELECTRICAL DISTRIBUTION EQUIPMENT SHOWN ARE BASED ON INDUSTRY STANDARD SIZES. CONTRACTOR SHALL VERIFY THAT THE FINAL EQUIPMENT SELECTION FITS IN THE ALLOCATED SPACE.
3. SITE LIGHTING SHALL BE 2#8, 1#8 GND IN A 1"C U.N.O. ALL EXTERIOR BUILDING MOUNTED LIGHTING SHALL BE 2#8, 1#8 GND IN A 3/4"C U.N.O.
4. REFERENCE LANDSCAPE ARCHITECTS DRAWINGS FOR ADDITIONAL INFORMATION.
5. ROUTE EXTERIOR LIGHTING TO PANEL INDICATED VIA LIGHTING CONTACTOR. REFER TO CONTACTOR SCHEDULE FOR MORE INFORMATION.
6. REFER TO POWER COMPANY DRAWINGS FOR EXACT TRANSFORMER LOCATION AND ADDITIONAL REQUIREMENTS. PROVIDE BOLLARDS AS REQUIRED BY POWER COMPANY FOR TRANSFORMER IMPACT PROTECTION.
7. UNDERGROUND CONDUIT SHALL BE INSTALLED A MINIMUM OF 24" BELOW FINISHED GRADE, UNLESS REQUIRED OTHERWISE.
8. EXTERIOR MOUNTED ELECTRICAL DEVICES SHALL BE IN NEMA 3R ENCLOSURES.
9. CONTRACTOR SHALL INCLUDE IN HIS BID THE COST OF CONDUIT, TRENCHING, AND BACKFILLING FROM THE SERVICE SWITCHBOARD TO THE UTILITY TRANSFORMER LOCATION SHOWN.
10. EXTERIOR RECEPTACLES SHALL BE "WEATHERPROOF WHILE IN USE" U.N.O.
11. PULLBOXES SHALL BE NO. 3-1/2 U.N.O.

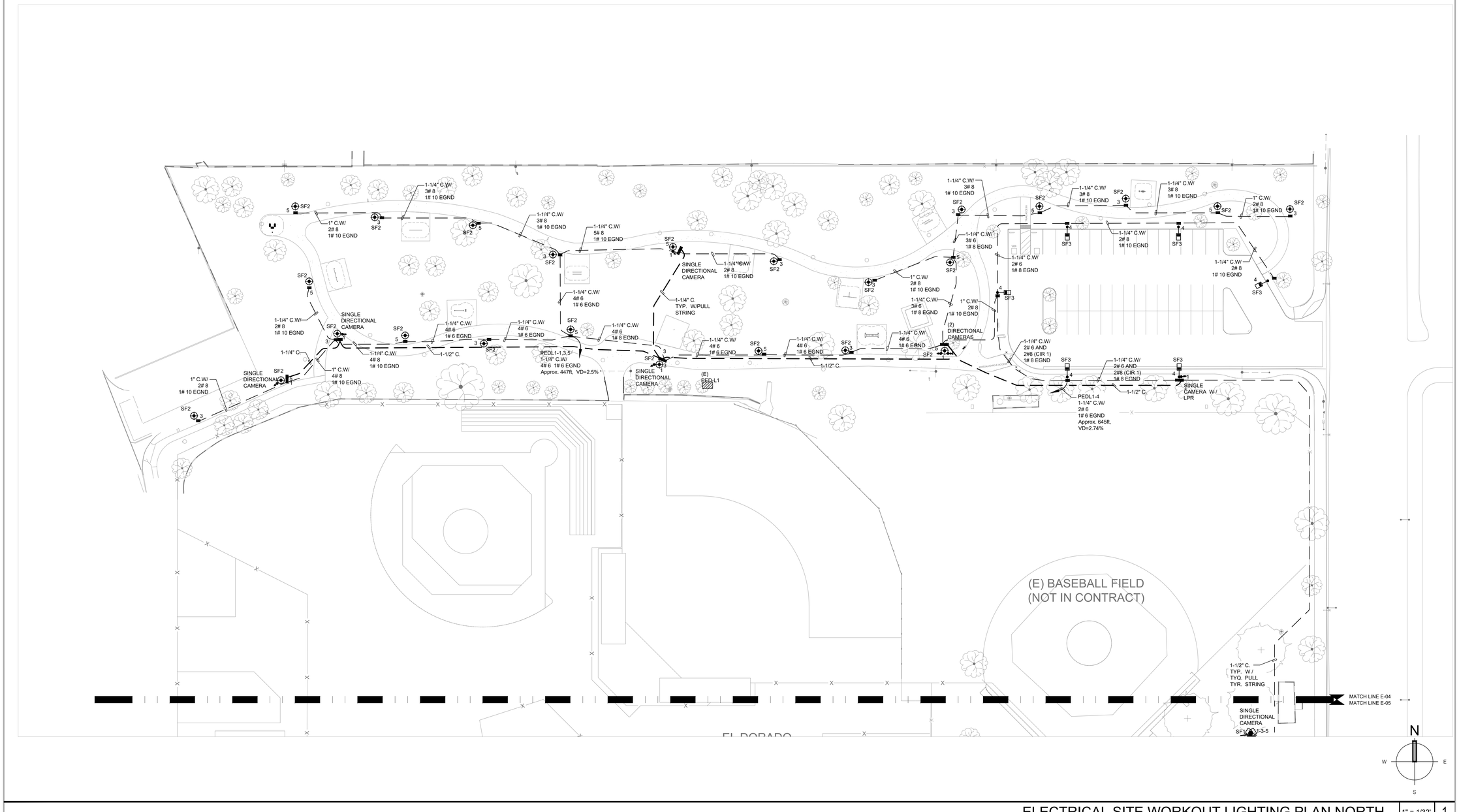

ELECTRICAL SITE WORKOUT LIGHTING PLAN NORTH | 1" = 1/32' | 1

APPROVAL

CITY APPROVED BY:

DIRECTOR OF PUBLIC WORKS — DATE

CITY REVIEWED BY:

SENIOR ENGINEER — DATE

SUBMITTED BY:

DATE

CLIENT

LANCASTER
Creating a better tomorrow. Together.

CITY OF LANCASTER
44933 FERN AVENUE
LANCASTER, CA 93534

PROJECT NAME

SAMARITAN'S PURSE PARK FORMERLY KNOWN AS EL DORADO PARK RENOVATION

PWCP NO. 24-008

44501 5th STREET EAST
LANCASTER, CA 93535

ENGINEER/ARCHITECT

IDS

IDS GROUP
1 PETERS CANYON ROAD, SUITE 130
IRVINE, CA. 92606
TEL: 949-387-8500, FAX: 949-387-0800

STAMP

REGISTERED PROFESSIONAL ENGINEER — STEVEN M. COLLINS — No. E22808 — Exp. 06/30/24 — ELECTRICAL — STATE OF CALIFORNIA

DATE SIGNED 09-23-23

ISSUE

REV.	DESCRIPTION	DATE
	30% CD SET	12/15/23
	60% CD SET	01/19/24
	90% CD SET	02/26/24
1	CLIENT REVISION	04/26/24
2	BID SET	09/10/24
3	BULLETIN #1	10/25/24
4	BULLETIN #1 R1	2/14/25
	COMPOSITE SET	9/24/25

PROJECT IDENTIFICATION

THIS DRAWING WAS CREATED IN AUTODESK AUTOCAD V. 2021 UNLESS OTHERWISE NOTED.

THE ORIGINAL SIZE OF THIS SHEET IS 30" X 42"

THESE DRAWINGS AND SPECIFICATIONS ARE THE PROPERTY AND COPYRIGHT OF IDS GROUP AND SHALL NOT BE USED ON ANY OTHER PROJECT OR LOCATIONS EXCEPT AS DESCRIBED ON THE DRAWINGS, WITHOUT THE WRITTEN AGREEMENT WITH IDS GROUP.

IDS PROJECT NO.	22X099.01
IDS DRAWN BY	SM
IDS CHECKED BY	SM
IDS APPROVED BY	SC

SHEET TITLE

ELECTRICAL SITE WORKOUT LIGHTING PLAN NORTH

SHEET NUMBER

E-05.2

SHEET NO. 10 OF 18

CUMULATIVE SHEET NO. XXX OF XXX

PROGRESS SET - NOT FOR CONSTRUCTION

IDS GROUP - FILE LOCATION: S:\PROJECTS\2022\SHARED\22X099.01 LANC - EL DORADO PARK\05 CAD\05 ELEC\2023-12-05-EXISTING CC FILES\E-05.2_05.3_SHEET 09-10 SITE PLAN PLOT DATE: 12/5/2024 7:23:43 PM USER: MICHAEL REED

GENERAL NOTES

- SF1 - PLAYGROUND POST LIGHT FIXTURE WITH OCC / PHOTO SENSORS WITH 16FT POLE
- DOUBLE DIRECTIONAL CAMERAS MOUNTED ON SINGLE POLE. POLE HEIGHT T.B.D. ON CAMERA REQUIREMENTS.
- SINGLE DIRECTIONAL CAMERA MOUNTED ON SINGLE POLE. POLE HEIGHT T.B.D. ON CAMERA REQUIREMENTS.
- 360 DEGREE DIRECTIONAL CAMERA MOUNTED ON SINGLE POLE. POLE HEIGHT T.B.D. ON CAMERA REQUIREMENTS.
- FLAGPOLE IN GROUND UP LIGHT
- UNDERGROUND CONDUITS
- GROUND HOLE "C" FOR COMMUNICATION ONLY.
- GROUND HOLE "P FOR POWER ONLY.

GENERAL NOTES

1. REFER TO SINGLE LINE DIAGRAM FOR CONDUIT AND WIRE SIZES FOR SWITCHBOARDS, PANELBOARDS AND TRANSFORMERS.
2. ELECTRICAL DISTRIBUTION EQUIPMENT SHOWN ARE BASED ON INDUSTRY STANDARD SIZES. CONTRACTOR SHALL VERIFY THAT THE FINAL EQUIPMENT SELECTION FITS IN THE ALLOCATED SPACE.
3. SITE LIGHTING SHALL BE 2#8, 1#6 GND IN A 1"C U.N.O. ALL EXTERIOR BUILDING MOUNTED LIGHTING SHALL BE 2#8, 1#8 GND IN A 3/4"C U.N.O.
4. REFERENCE LANDSCAPE ARCHITECTS DRAWINGS FOR ADDITIONAL INFORMATION.
5. ROUTE EXTERIOR LIGHTING TO PANEL INDICATED VIA LIGHTING CONTACTOR. REFER TO CONTACTOR SCHEDULE FOR MORE INFORMATION.
6. REFER TO POWER COMPANY DRAWINGS FOR EXACT TRANSFORMER LOCATION AND ADDITIONAL REQUIREMENTS. PROVIDE BOLLARDS AS REQUIRED BY POWER COMPANY FOR TRANSFORMER IMPACT PROTECTION.
7. UNDERGROUND CONDUIT SHALL BE INSTALLED A MINIMUM OF 24" BELOW FINISHED GRADE, UNLESS REQUIRED OTHERWISE.
8. EXTERIOR MOUNTED ELECTRICAL DEVICES SHALL BE IN NEMA 3R ENCLOSURES.
9. CONTRACTOR SHALL INCLUDE IN HIS BID THE COST OF CONDUIT, TRENCHING, AND BACKFILLING FROM THE SERVICE SWITCHBOARD TO THE UTILITY TRANSFORMER LOCATION SHOWN.
10. EXTERIOR RECEPTACLES SHALL BE "WEATHERPROOF WHILE IN USE" U.N.O.
11. PULLBOXES SHALL BE NO. 3-1/2 U.N.O.

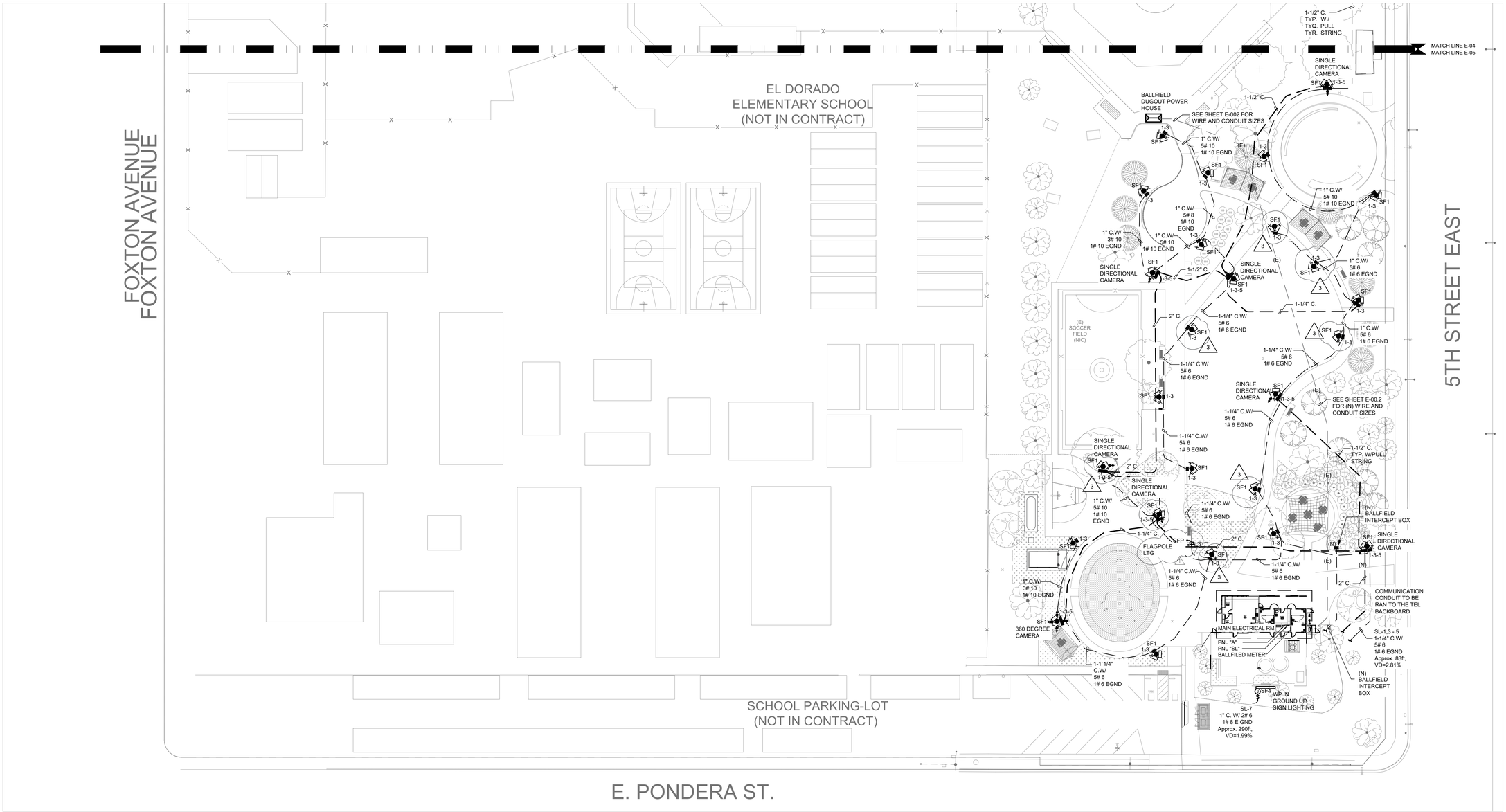

ELECTRICAL SITE PLAYGROUND LIGHTING PLAN SOUTH | 1" = 1/32" | 1

APPROVAL

CITY APPROVED BY:

DIRECTOR OF PUBLIC WORKS — DATE

CITY REVIEWED BY:

SENIOR ENGINEER — DATE

SUBMITTED BY:

DATE

CLIENT

LANCASTER
Creating a better tomorrow. Together.

CITY OF LANCASTER

44933 FERN AVENUE
LANCASTER, CA 93534

PROJECT NAME

SAMARITAN'S PURSE PARK FORMERLY KNOWN AS EL DORADO PARK RENOVATION

PWCP NO. 24-008

44501 5th STREET EAST
LANCASTER, CA 93535

ENGINEER/ARCHITECT

IDS

IDS GROUP

1 PETERS CANYON ROAD, SUITE 130
IRVINE, CA. 92606
TEL: 949-387-8500, FAX: 949-387-0800

STAMP

REGISTERED PROFESSIONAL ENGINEER
BRETT ON M. COLTON
No. E22808
Exp. 06,30,24
ELECTRICAL
STATE OF CALIFORNIA
DATE SIGNED 09-23-23

ISSUE

REV.	DESCRIPTION	DATE
	30% CD SET	12/15/23
	60% CD SET	01/19/24
	90% CD SET	02/26/24
1	CLIENT REVISION	04/26/24
2	BID SET	09/10/24
3	BULLETIN #1	10/25/24
4	BULLETIN #1 R1	2/14/25
	COMPOSITE SET	9/24/25

PROJECT IDENTIFICATION

THIS DRAWING WAS CREATED IN AUTODESK AUTOCAD V. 2021 UNLESS OTHERWISE NOTED.

THE ORIGINAL SIZE OF THIS SHEET IS 30" X 42"

THESE DRAWINGS AND SPECIFICATIONS ARE THE PROPERTY AND COPYRIGHT OF IDS GROUP AND SHALL NOT BE USED ON ANY OTHER PROJECT OR LOCATIONS EXCEPT AS DESCRIBED ON THE DRAWINGS, WITHOUT THE WRITTEN AGREEMENT WITH IDS GROUP.

IDS PROJECT NO.	22X099.01
IDS DRAWN BY	SM
IDS CHECKED BY	SM
IDS APPROVED BY	SC

SHEET TITLE

ELECTRICAL SITE PLAYGROUND LIGHTING PLAN SOUTH

SHEET NUMBER

E-05.3

SHEET NO. 11 OF 18

CUMULATIVE SHEET NO. XXX OF XXX

PROGRESS SET - NOT FOR CONSTRUCTION

IDS GROUP - FILE LOCATION: S:\PROJECTS\2022\SHARED\22X099.01 LANC - EL DORADO PARK\05 CAD\05 ELEC\2023-12-05-EXISTING CC FILES\E-05.2_05.3_SHEET 09-10 SITE PLAN PLOT DATE: 12/5/2024 7:23:52 PM USER: MICHAEL REED

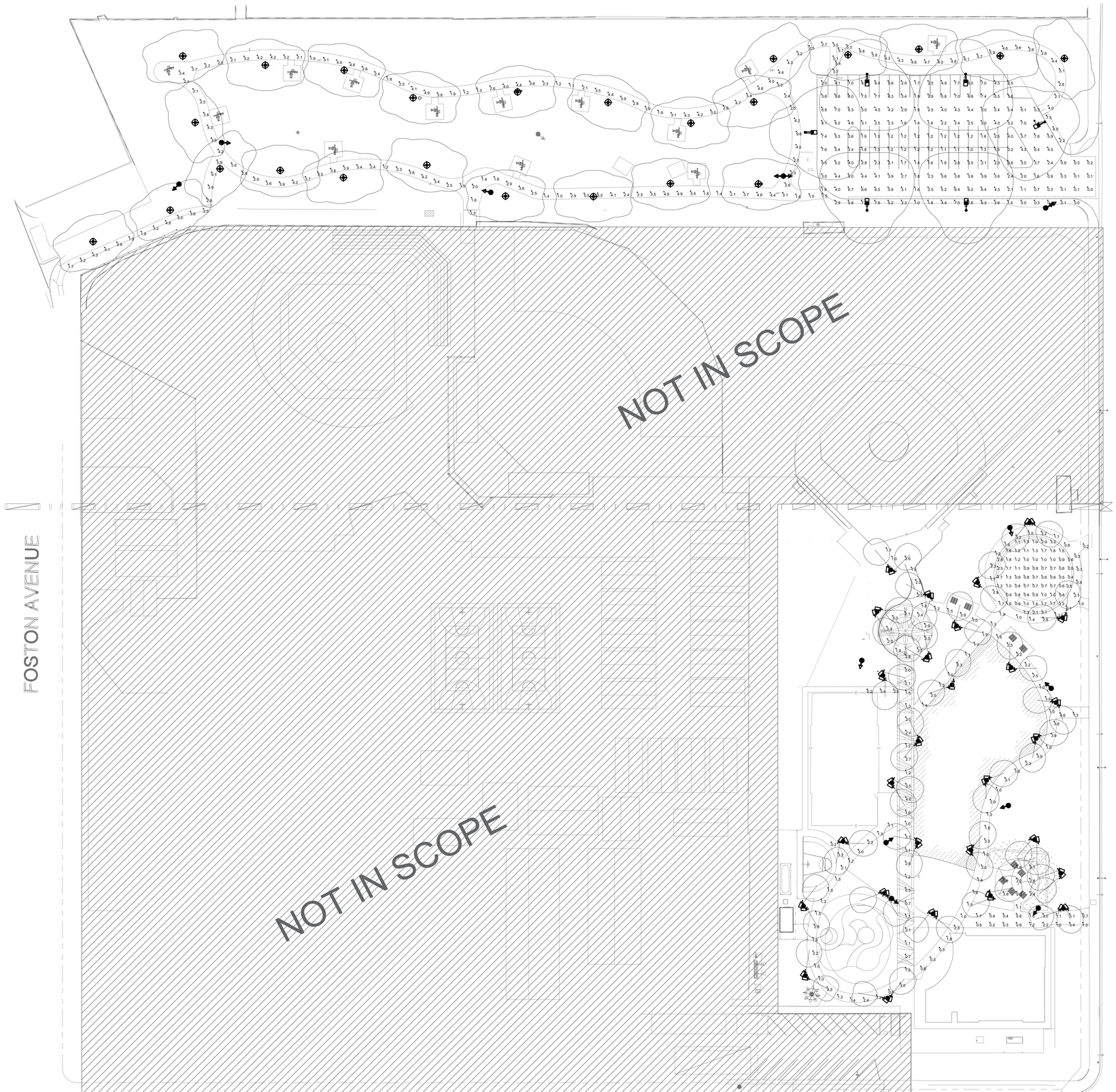

Luminaire Schedule											
Symbol	Qty	Label	Arrangement	Description	Mounting Height	Tag	LLF	Lamps per Luminaire	Lumens per Lamp	Total Watts	Filename
	18	SP1	Single	Poles Fixtures Per Plan BULLARD BOLLARDS: EDGE SP 15L 36 50d GH1SBL, 3000K, 70CRI, 1000 LUMENS, 15W	12'	POLE MOUNTED FIXTURE MOUNTING HEIGHT IN CALC.@ 20FT AFG	1.000	1000	52	15.00	SP15BLEDP1M50.ies
	24	SP1	Single	1.5' DIA PYCO SP-SERIES	12'	TOP OF FIXTURE @ APPROX 18FT AFG	1.000	1000	52	20.00	DPLED1.0_SP-SERIES.ies
	8	SP1	Single	1.5' SLIM LED-DL-SC PT-ED-TEORI	12'	POLE MOUNTED FIXTURE @ 20FT AFG	0.900	3000K	52	38W	SLIM LED-DL-SC PT-ED-TEORI.ies

Calculation Summary							
Label	Calc Type	Units	Avg	Max	Min	Avg/Min	Max/Min
* FOXTAIL	Illuminance	Fc	1.00	5.0	0.1	9.00	50.0
* FOXTAIL	Illuminance	Fc	0.97	4.9	0.1	9.70	49.0
* PLAYGROUND PATH	Illuminance	Fc	1.00	5.0	0.2	5.00	25.0
* AREA BETWEEN BLDG & PICNIC TAB	Illuminance	Fc	1.21	5.1	0.2	7.05	25.50
* PICNIC TABLE AREA	Illuminance	Fc	0.99	4.9	0.1	8.10	49.0

DISCLAIMER: This calculation, either normal lighting or emergency lighting, is based on the information provided to IDS by the architect, engineer, lighting designer, contractor, etc. These findings should be verified by a certified electrical engineer as to their accuracy and suitability for your application. IDS makes no claim as to the reflectances of all interior surfaces including partition walls may adversely affect the overall light levels. IDS is not responsible as to the veracity of these calculations, and should only be used as a design reference but not as the only or approximation.

ELECTRICAL SITE LIGHTING PHOTOMETRIC STUDY | 1" = 1/32' | 1

APPROVAL

CITY APPROVED BY:

DIRECTOR OF PUBLIC WORKS — DATE
CITY REVIEWED BY:

SENIOR ENGINEER — DATE
SUBMITTED BY:

DATE

CLIENT

LANCASTER
Creating a better tomorrow. Together.

CITY OF LANCASTER

44933 FERN AVENUE
LANCASTER, CA 93534

PROJECT NAME

SAMARITAN'S PURSE PARK
FORMERLY KNOWN AS
EL DORADO PARK
RENOVATION

PWCP NO. 24-008

44501 5th STREET EAST
LANCASTER, CA 93535

ENGINEER/ARCHITECT

IDS

IDS GROUP

1 PETERS CANYON ROAD, SUITE 130
IRVINE, CA. 92606
TEL: 949-387-8500, FAX: 949-387-0800

STAMP

REGISTERED PROFESSIONAL ENGINEER
STEVEN M. COLVIN
No. E22808
Exp. 06/30/24
ELECTRICAL
STATE OF CALIFORNIA

DATE SIGNED 09-23-23

ISSUE

REV.	DESCRIPTION	DATE
	30% CD SET	12/15/23
	60% CD SET	01/19/24
	90% CD SET	02/26/24
1	CLIENT REVISION	04/26/24
2	BID SET	09/10/24
3	BULLETIN #1	10/25/24
4	BULLETIN #1 R1	2/14/25
	COMPOSITE SET	9/24/25

PROJECT IDENTIFICATION

THIS DRAWING WAS CREATED IN AUTODESK AUTOCAD V. 2021 UNLESS OTHERWISE NOTED.

THE ORIGINAL SIZE OF THIS SHEET IS 30" X 42"

THESE DRAWINGS AND SPECIFICATIONS ARE THE PROPERTY AND COPYRIGHT OF IDS GROUP AND SHALL NOT BE USED ON ANY OTHER PROJECT OR LOCATIONS EXCEPT AS DESCRIBED ON THE DRAWINGS, WITHOUT THE WRITTEN AGREEMENT WITH IDS GROUP.

IDS PROJECT NO.	22X099.01
IDS DRAWN BY	SM
IDS CHECKED BY	SM
IDS APPROVED BY	SC

SHEET TITLE

ELECTRICAL SITE LIGHTING PHOTOMETRIC STUDY

SHEET NUMBER

E-05.4

SHEET NO. 1 OF 18

CUMULATIVE SHEET NO. XXX OF XXX

PROGRESS SET - NOT FOR CONSTRUCTION

IDS GROUP - FILE LOCATION: S:\PROJECTS\2022\SHARED\22X099.01 LANC - EL DORADO PARK\05 CAD\05 ELEC\2023-12-05-EXISTING CC FILESIE-05.4_SHEET 11 SITE PHOTOMETRIC PLOT DATE: 12/5/2024 7:23:31 PM USER: MICHAEL REED

PANEL "PS"

MOUNTING SURFACE | **DOUBLE LUG** NO | Volts: 120/240V | **MAIN** MLO
NEMA 3R NO | **200%** NO | Phases: 1 | **BUS** 125
FEED THRU NO | **I/G BUS** NO | Wires: 3 | **A.I.C.** 10,000

NOTES	LOADS	CIRC	LOCATION	TRIP	POLES	A	B	A	B	POLES	TRIP	LOCATION	CIRC	LOADS	NOTES
	L	1	SPARE	20A	1			84		1	20A	PULMP STATION LIGHTING	2	L	
	L	3	SPARE	20A	1				180	1	20A	PUMPSTATION WP OUTLET	4	R	
	R	5	SPARE	20A	1							SPACE	6		
		7	SPARE	20A	1							SPACE	8		
		9	SPARE	20A	1							SPACE	10		
		11	SPARE	20A	1							SPACE	12		
		13	SPACE	--								SPACE	14		
		15	SPACE	--								SPACE	16		
		17	SPACE	--								SPACE	18		
		19	SPARE	20A	1							SPACE	20		
		21	SPARE	20A	1							SPACE	22		
		23	SPARE	20A	1							SPACE	24		

	ØA	ØB
TOTAL DEMAND LOAD:	105	180
TOTAL DEMAND AMPS:	1	2

58% PERCENT BALANCE

LOAD CLASSIFICATION	CONNECTED LOAD	DEMAND FACTOR	ESTIMATED DEMAND	PANEL LOADS	
CONTINUOUS LOAD = C	0	125%	0		
KITCHEN EQUIPMENT LOAD = K	0	100%	0	TOTAL CONN. LOAD (VA):	264
LIGHTING LOAD = L	84	125%	105	TOTAL EST. DEMAND (VA):	285
MOTOR LOAD = M	0	100%	0	TOTAL CONN. (AMPS):	1
NON-CONTINUOUS LOAD = N	0	100%	0	TOTAL EST. DEMAND (AMPS):	1
PANEL LOAD = P	0	100%	0		
RECEPTACLE LOAD = R	180	100%	180		

PANEL SCHEDULE NOTES:

1. PROVIDE LOCK-ON DEVICE.
2. PROVIDE LOCK-OFF DEVICE.
3. CIRCUIT BREAKER CONTROLLED BY ANSUL SYSTEM. REFER TO HOOD FIRE SYSTEM INTERLOCK DIAGRAM.
4. PROVIDE GFCI TYPE DEVICE.
5. PROVIDE A RED CIRCUIT BREAKER.
6. PROVIDE A NEW BREAKER TO EXISTING TYPE AND A.I.C. RATING IN PANEL
7. PROVIDE "HACR" TYPE CIRCUIT BREAKER. FOR HVAC EQUIPMENT.
8. PROVIDE PHOTOCELL AND TIME CLOCK CLOCK WITH RELAYS FOR EXTERIO LIGHITNG CONTROL. REFER TO EXTERIOR LIGHTING CONTROL DIAGRAM.

9 10 EXISTING BREAKER CIRCUIT MADE AVAILABLE THROUGH DEMOLITION

FUTURE PUMP STATION EQUIPMENT PANEL SCHEDULE

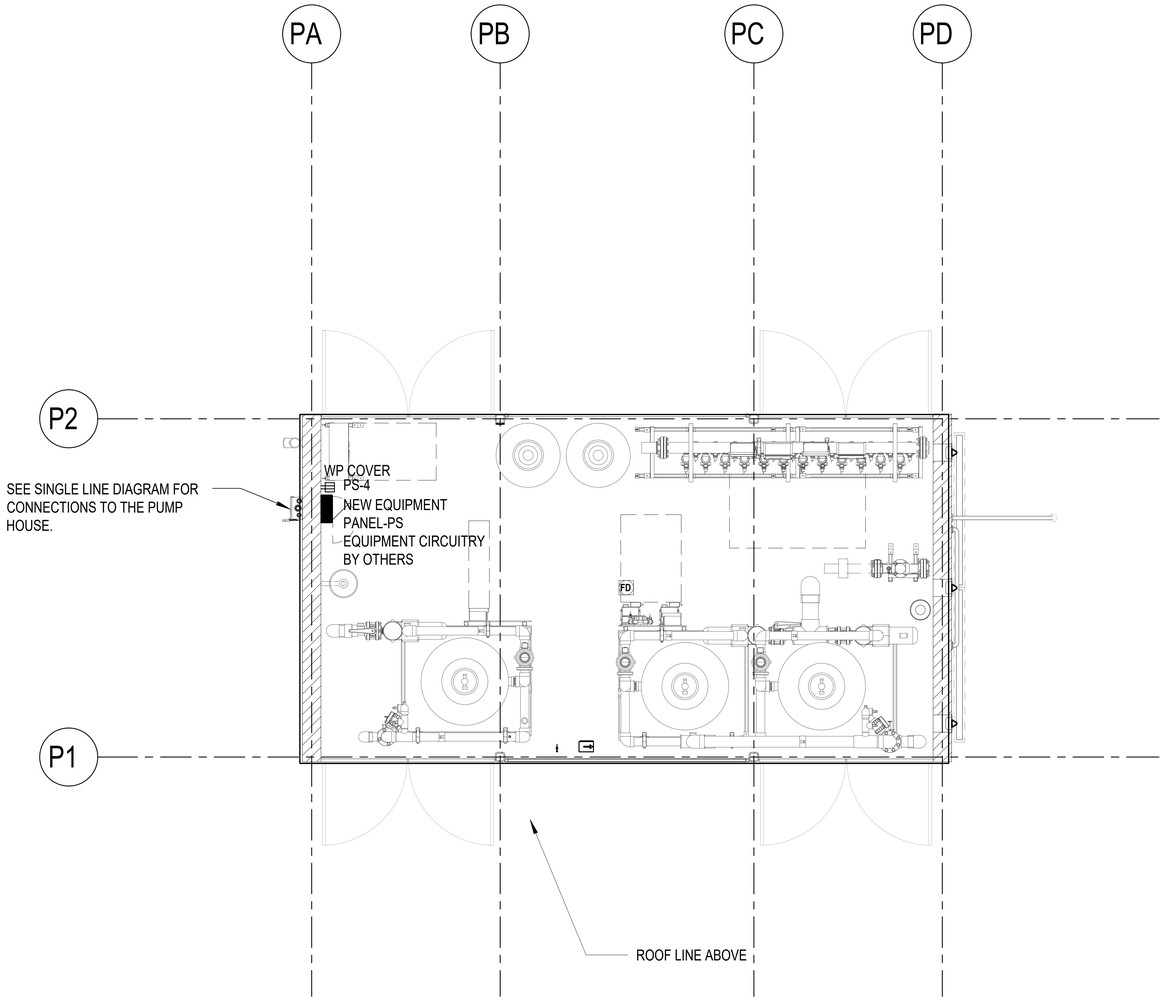

CONTROL WIRING PERMITTED BY OTHERS

PUMP STATION POWER DETAIL

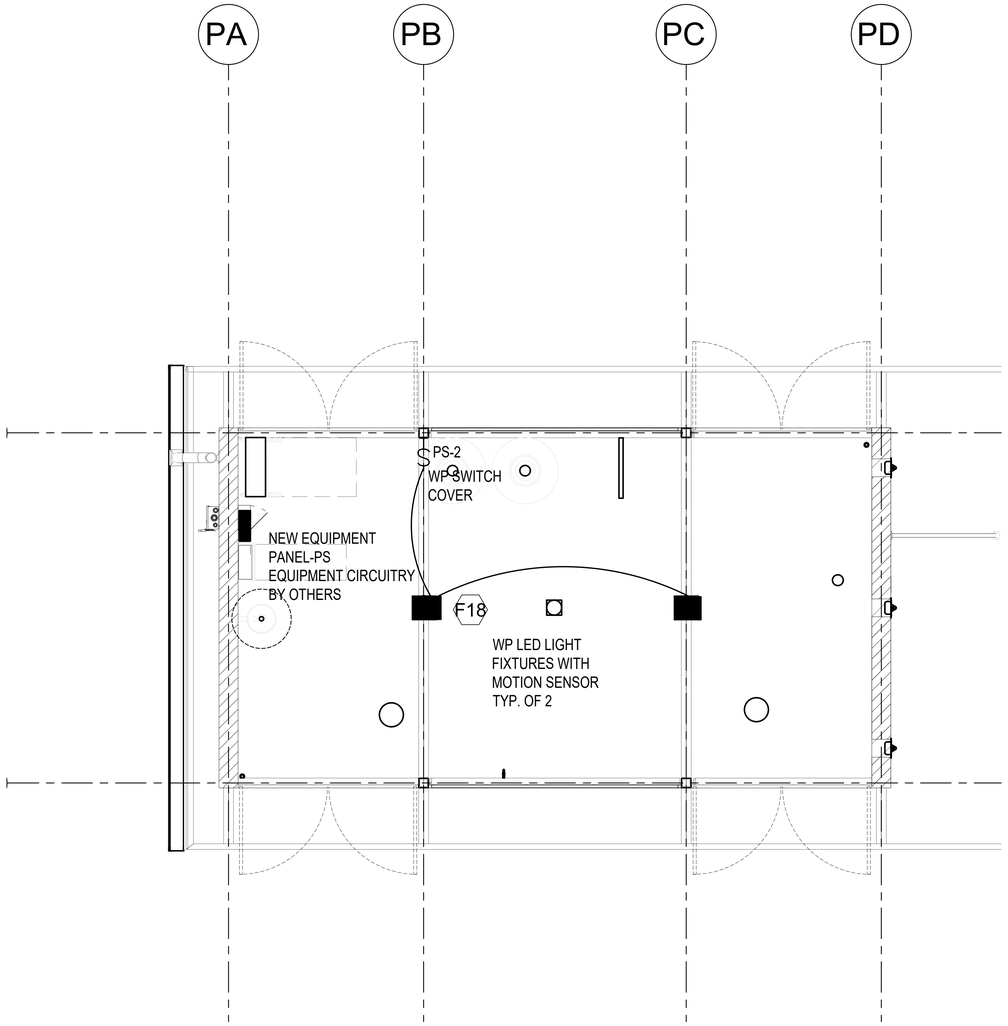

PUMP STATION LIGHTING DETAIL

NTS | 1

APPROVAL

CITY APPROVED BY:

DIRECTOR OF PUBLIC WORKS DATE

CITY REVIEWED BY:

SENIOR ENGINEER DATE

SUBMITTED BY:

DATE

CLIENT

LANCASTER
Creating a better tomorrow. Together.

CITY OF LANCASTER

44933 FERN AVENUE
LANCASTER, CA 93534

PROJECT NAME

SAMARITAN'S PURSE PARK FORMERLY KNOWN AS EL DORADO PARK RENOVATION

PWCP NO. 24-008

44501 5th STREET EAST
LANCASTER, CA 93535

ENGINEER/ARCHITECT

IDS

IDS GROUP

1 PETERS CANYON ROAD, SUITE 130
IRVINE, CA. 92606
TEL: 949-387-8500, FAX: 949-387-0800

STAMP

REGISTERED PROFESSIONAL ENGINEER
STEVEN M. COLLINS
No. E22808
Exp. 06-30-24
ELECTRICAL
STATE OF CALIFORNIA

DATE SIGNED 09-23-23

ISSUE

REV.	DESCRIPTION	DATE
	30% CD SET	12/15/23
	60% CD SET	01/19/24
	90% CD SET	02/26/24
1	CLIENT REVISION	04/26/24
2	BID SET	09/10/24
3	BULLETIN #1	10/25/24
4	BULLETIN #1 R1	2/14/25
	COMPOSITE SET	9/24/25

PROJECT IDENTIFICATION

THIS DRAWING WAS CREATED IN AUTODESK AUTOCAD V. 2021 UNLESS OTHERWISE NOTED.

THE ORIGINAL SIZE OF THIS SHEET IS 30" X 42"

THESE DRAWINGS AND SPECIFICATIONS ARE THE PROPERTY AND COPYRIGHT OF IDS GROUP AND SHALL NOT BE USED ON ANY OTHER PROJECT OR LOCATIONS EXCEPT AS DESCRIBED ON THE DRAWINGS, WITHOUT THE WRITTEN AGREEMENT WITH IDS GROUP.

IDS PROJECT NO.	22X099.01
IDS DRAWN BY	SM
IDS CHECKED BY	SM
IDS APPROVED BY	SC

SHEET TITLE

ENLARGED PUMP STATION DETAILS

SHEET NUMBER

E-06

SHEET NO. 13 OF 18

CUMULATIVE SHEET NO. XXX OF XXX

PROGRESS SET - NOT FOR CONSTRUCTION

IDS GROUP - FILE LOCATION: S:\PROJECTS\2022\SHARED\22X099.01 LANC - EL DORADO PARK\05 CAD\05 ELEC\2023-12-05-EXISTING CC FILES\E-06 _ SHEET 12 PUMP HOUSE PLOT DATE: 12/5/2024 7:24:09 PM USER: MICHAEL.REED

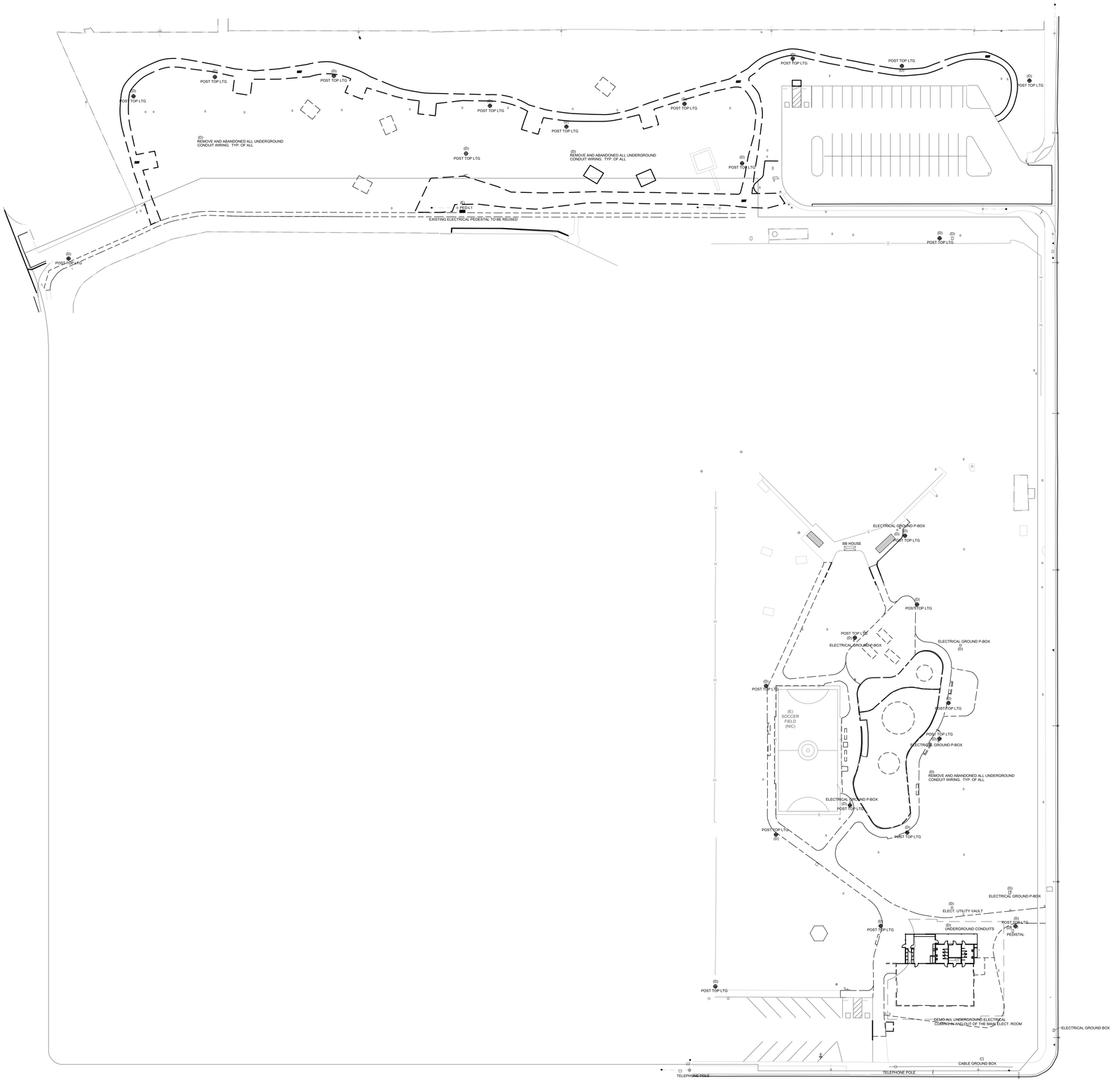

GENERAL NOTES

1. REFER TO SINGLE LINE DIAGRAM FOR CONDUIT AND WIRE SIZES FOR SWITCHBOARDS, PANELBOARDS AND TRANSFORMERS.
2. ELECTRICAL DISTRIBUTION EQUIPMENT SHOWN ARE BASED ON INDUSTRY STANDARD SIZES. CONTRACTOR SHALL VERIFY THAT THE FINAL EQUIPMENT SELECTION FITS IN THE ALLOCATED SPACE.
3. SITE LIGHTING SHALL BE 2#8, 1#8 GND IN A 1"C U.N.O. ALL EXTERIOR BUILDING MOUNTED LIGHTING SHALL BE 2#8, 1#8 GND IN A 3/4"C U.N.O.
4. REFERENCE LANDSCAPE ARCHITECTS DRAWINGS FOR ADDITIONAL INFORMATION.
5. ROUTE EXTERIOR LIGHTING TO PANEL INDICATED VIA LIGHTING CONTACTOR. REFER TO CONTACTOR SCHEDULE FOR MORE INFORMATION.
6. REFER TO POWER COMPANY DRAWINGS FOR EXACT TRANSFORMER LOCATION AND ADDITIONAL REQUIREMENTS. PROVIDE BOLLARDS AS REQUIRED BY POWER COMPANY FOR TRANSFORMER IMPACT PROTECTION.
7. UNDERGROUND CONDUIT SHALL BE INSTALLED A MINIMUM OF 24" BELOW FINISHED GRADE, UNLESS REQUIRED OTHERWISE.
8. EXTERIOR MOUNTED ELECTRICAL DEVICES SHALL BE IN NEMA 3R ENCLOSURES.
9. CONTRACTOR SHALL INCLUDE IN BID THE COST OF CONDUIT, TRENCHING, AND BACKFILLING FROM THE SERVICE SWITCHBOARD TO THE UTILITY TRANSFORMER LOCATION SHOWN.
10. EXTERIOR RECEPTACLES SHALL BE "WEATHERPROOF WHILE IN USE" U.N.O.
11. PULL BOXES SHALL BE SIZED TO MEET THE MINIMUM WIRE PULL REQUIRED BY NEC, U.N.O.

OVERALL ELECTRICAL SITE DEMO PLAN | 1" = 40' | 1

APPROVAL

CITY APPROVED BY:

DIRECTOR OF PUBLIC WORKS — DATE

CITY REVIEWED BY:

SENIOR ENGINEER — DATE

SUBMITTED BY:

DATE

CLIENT

LANCASTER
Creating a better tomorrow. Together.

CITY OF LANCASTER

44933 FERN AVENUE
LANCASTER, CA 93534

PROJECT NAME

SAMARITAN'S PURSE PARK FORMERLY KNOWN AS EL DORADO PARK RENOVATION

PWCP NO. 24-008

44501 5th STREET EAST
LANCASTER, CA 93535

ENGINEER/ARCHITECT

IDS

IDS GROUP

1 PETERS CANYON ROAD, SUITE 130
IRVINE, CA. 92606
TEL: 949-387-8500, FAX: 949-387-0800

STAMP

REGISTERED PROFESSIONAL ENGINEER
STEVEN M. COLLTON
No. E22808
Exp. 06/30/25
ELECTRICAL
STATE OF CALIFORNIA

DATE SIGNED 09-23-23

ISSUE

REV.	DESCRIPTION	DATE
	30% CD SET	12/15/23
	60% CD SET	01/19/24
	90% CD SET	02/26/24
1	CLIENT REVISION	04/26/24
2	BID SET	09/10/24
3	BULLETIN #1	10/25/24
4	BULLETIN #1 R1	2/14/25
	COMPOSITE SET	9/24/25

PROJECT IDENTIFICATION

THIS DRAWING WAS CREATED IN AUTODESK AUTOCAD V. 2021 UNLESS OTHERWISE NOTED.

THE ORIGINAL SIZE OF THIS SHEET IS 30" X 42"

THESE DRAWINGS AND SPECIFICATIONS ARE THE PROPERTY AND COPYRIGHT OF IDS GROUP AND SHALL NOT BE USED ON ANY OTHER PROJECT OR LOCATIONS EXCEPT AS DESCRIBED ON THE DRAWINGS, WITHOUT THE WRITTEN AGREEMENT WITH IDS GROUP.

IDS PROJECT NO.	22X099.01
IDS DRAWN BY	SM
IDS CHECKED BY	SM
IDS APPROVED BY	SC

SHEET TITLE

OVERALL ELECTRICAL SITE DEMO PLAN

SHEET NUMBER

E-06.1

SHEET NO. 9 OF 18

CUMULATIVE SHEET NO. XXX OF XXX

PROGRESS SET - NOT FOR CONSTRUCTION

IDS GROUP - FILE LOCATION: S:\PROJECTS\2022\SHARED\22X099.01 LANC - EL DORADO PARK\05 CAD\05 ELEC\2023-12-05-EXISTING CC FILES\11-E-05.1_SHEET 08 DEMO SITE PLAN PLOT DATE: 12/5/2024 7:24:03 PM USER: MICHAEL.REED

IDS GROUP - FILE LOCATION: S:\PROJECTS\2022\SHARED\22X099.01 LANC - EL DORADO PARK\05 CAD\05 ELEC\2023-12-05-EXISTING CC FILESIE-07_SHEET _ CONTROL PLOT DATE: 12/5/2024 7:23:29 PM USER: MICHAEL.REED

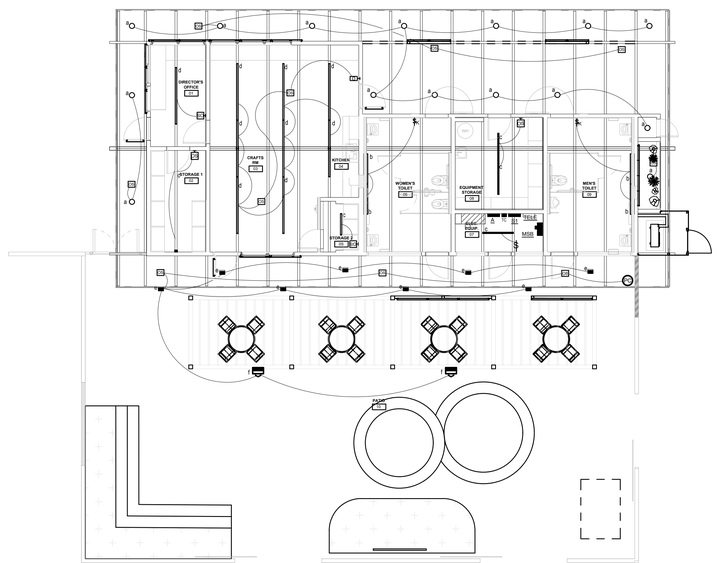

N
W E
S

COMMUNITY CENTER NEW LIGHTING CONTROL PLAN | 1/8" = 1'-0" | 1

GENERAL LIGHTING DEMO NOTES

HEIGHTS FOR SWITCH, DIMMER CONTROLS AND SHALL BE 48" MAX. SEE SHEET E-07.1 FOR DETAILS TYP. FOR ALL

OUTDOOR LIGHTING SHALL BE ON TIME CLOCK AND PHOTO SENSOR SEE TIME CLOCK SCHEDULE FOR DETAILS.

CONTRACTOR SHALL VERIFY ALL WALL SCONCE AND WALL MOUNTING TV HEIGHTS WITH OWNERS PRIOR OF INSTALLATION.

REFER TO SHEET E-07.1 FOR SWITCH, DIMMER AND SENSOR CONTROLS AND LOCATIONS. FOR DETAILS TYP. FOR ALL

CONTRACTOR SHALL PROVIDE LOW LEVEL NON POWERED EXIT SIGNS. COORDINATE WITH OWNERS FOR LOCATIONS. TYP. OF ALL.

APPROVAL

CITY APPROVED BY:

DIRECTOR OF PUBLIC WORKS DATE

CITY REVIEWED BY:

SENIOR ENGINEER DATE

SUBMITTED BY:

DATE

CLIENT

LANCASTER
Creating a better tomorrow. Together.

CITY OF LANCASTER

44933 FERN AVENUE
LANCASTER, CA 93534

PROJECT NAME

SAMARITAN'S PURSE PARK FORMERLY KNOWN AS EL DORADO PARK RENOVATION

PWCP NO. 24-008

44501 5th STREET EAST
LANCASTER, CA 93535

ENGINEER/ARCHITECT

IDS

IDS GROUP

1 PETERS CANYON ROAD, SUITE 130
IRVINE, CA. 92606
TEL: 949-387-8500, FAX: 949-387-0800

STAMP

REGISTERED PROFESSIONAL ENGINEER
STEVEN M. COLTON
No. E22808
Exp. 06-30-24
ELECTRICAL
STATE OF CALIFORNIA
DATE SIGNED 09-23-23

ISSUE

REV.	DESCRIPTION	DATE
	30% CD SET	12/15/23
	60% CD SET	01/19/24
	90% CD SET	02/26/24
1	CLIENT REVISION	04/26/24
2	BID SET	09/10/24
3	BULLETIN #1	10/25/24
4	BULLETIN #1 R1	2/14/25
	COMPOSITE SET	9/24/25

PROJECT IDENTIFICATION

THIS DRAWING WAS CREATED IN AUTODESK AUTOCAD V. 2021 UNLESS OTHERWISE NOTED.

THE ORIGINAL SIZE OF THIS SHEET IS 30" X 42"

THESE DRAWINGS AND SPECIFICATIONS ARE THE PROPERTY AND COPYRIGHT OF IDS GROUP AND SHALL NOT BE USED ON ANY OTHER PROJECT OR LOCATIONS EXCEPT AS DESCRIBED ON THE DRAWINGS, WITHOUT THE WRITTEN AGREEMENT WITH IDS GROUP.

IDS PROJECT NO.	22X099.01
IDS DRAWN BY	SM
IDS CHECKED BY	SM
IDS APPROVED BY	SC

SHEET TITLE

COMMUNITY CENTER LIGHTING CONTROL PLAN

SHEET NUMBER

E-07

SHEET NO. 6 OF 18

CUMULATIVE SHEET NO. XXX OF XXX

PROGRESS SET - NOT FOR CONSTRUCTION

nLIGHT BACKBONE SYSTEM

BACKBONE-750 HYBRID

IMPORTANT: **MANUFACTURER OR AUTHORIZED LIGHTING REPRESENTATIVE OF CONTROL SYSTEM MUST VERIFY TYPE, QUANTITIES, PLACEMENT OF DEVICES TO MEET DESIGN INTENT AND TITLE 24 CODE COMPLIANCE, AND PROVIDE SHOP DRAWINGS FOR SPECIFIER APPROVAL. THIRD PARTY TAKE-OFFS OR LAYOUTS WILL NOT BE ACCEPTED. NO EXCEPTIONS.**

PERFORMANCE LIGHTING SYSTEMS (MFR'S REPRESENTATIVE) CONTACTS:

Emad Nawaz (Controls Specialist; Specification Sales): Emadn@performanceltg.com 310-402-8130

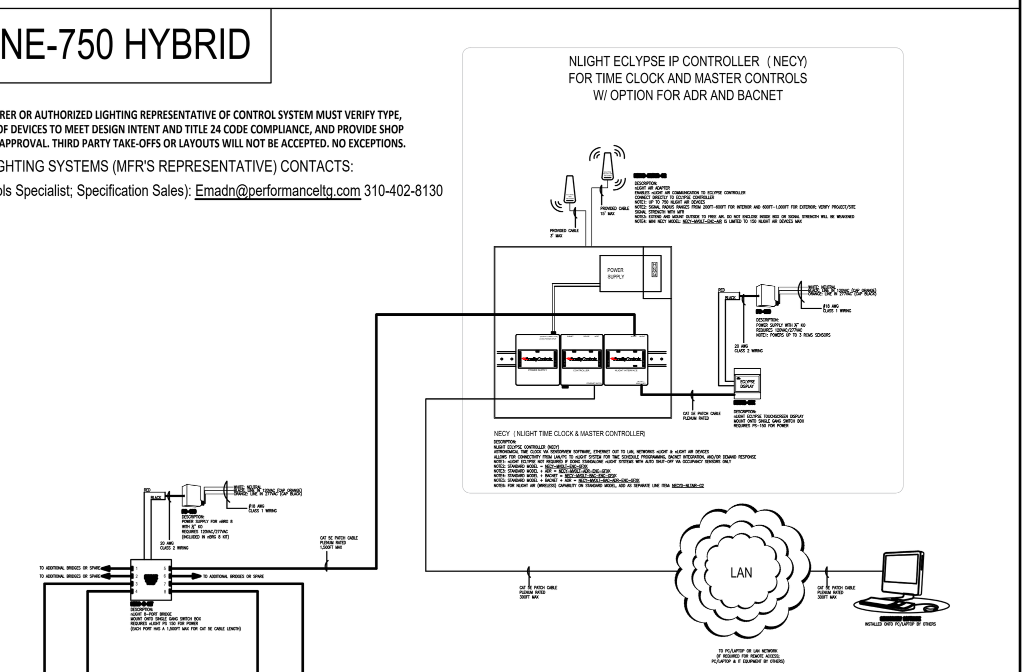

OR

FRESCO TOUCHSCREEN

FRES-1a

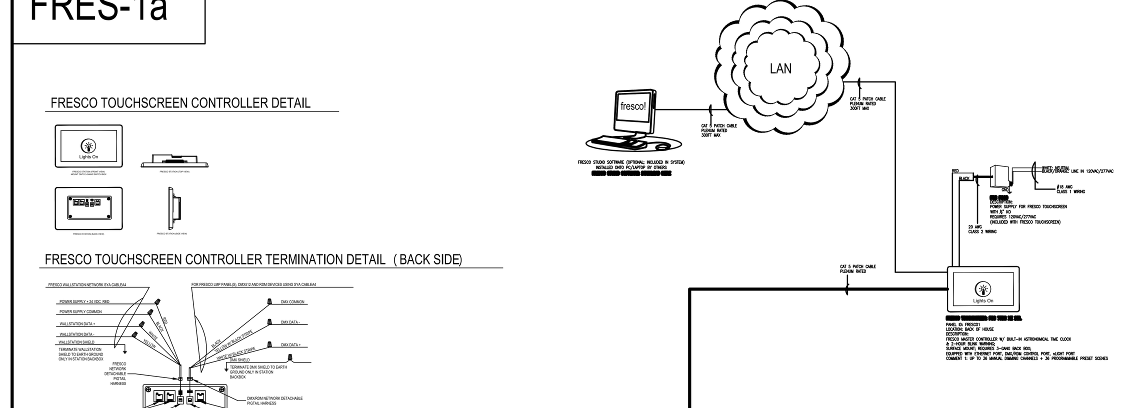

3PP — 1-ZONE SMALL ROOM

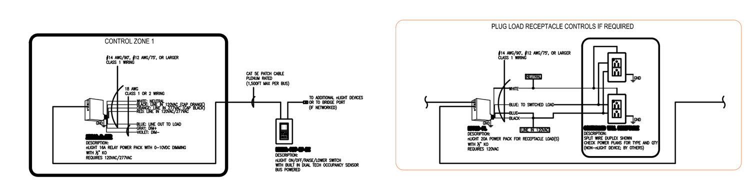

(NTS) TYPICAL 1-ZONE SMALL ROOM USING nLIGHT POWER PACK

REFER TO PLANS FOR TYPES AND QUANTITIES

TITLE 24 COMPLIANT SEQUENCE OF OPERATION:

1. OCCUPANCY SENSOR PROVIDES AUTOMATIC ON/OFF OF LIGHTS/LOAD BASED ON ROOM OCCUPANCY (USE DEFAULT TIME DELAY FOR OCCUPANCY SENSOR) .
2. SWITCH PROVIDES MANUAL OVERRIDE OF THE LIGHTS: ON/OFF/RAISE/LOWER.

nLIGHT SYSTEM NOTE:

1. OCCUPANCY SENSOR IS CAPABLE OF DOING PARTIAL ON 50%-70% LIGHTING POWER AND FULL AUTO OFF, PROVIDE IN SPACES WHERE REQUIRED SUCH AS CONFERENCE ROOMS, OFFICES < 250SQFT, MULTIPURPOSE ROOMS < 1000SQFT, AND CLASSROOMS.

4PP — CORRIDOR

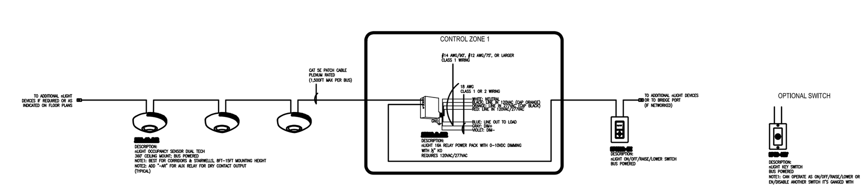

(NTS) TYPICAL CORRIDOR USING nLIGHT POWER PACK

REFER TO PLANS FOR TYPES AND QUANTITIES

TITLE 24 COMPLIANT SEQUENCE OF OPERATION:

1. LIGHTS SHALL AUTOMATICALLY GO TO 100% FULL BRIGHT WHEN SENSED BY ANY OCCUPANCY SENSOR IN THE ENCLOSED SPACE.
2. AFTER 1ST TIME OUT EXPIRES DUE TO VACANCY, LIGHTS SHALL GO TO DIMMED LOW LEVEL.
3. AFTER 2ND TIME OUT EXPIRES DUE TO VACANCY, LIGHTS SHALL GO FROM DIMMED LOW LEVEL TO OFF.
4. ALTERNATE FOR 2ND TIME OUT: AUTOMATIC SHUT-OFF VIA SCHEDULED TIME CLOCK, BUT NLIGHT SYSTEM MUST BE A NETWORKED ECLYPSE SYSTEM AND NOT STANDALONE.
5. SWITCH PROVIDES MANUAL OVERRIDE OF THE LIGHTS: ON/OFF/RAISE/LOWER.

nLIGHT SYSTEM NOTE:

1. "COMMON" CORRIDORS TYPICALLY FOUND IN MULTI-TENTANT RESIDENTIAL AND COMMERCIAL BUILDINGS, HOTELS AND MOTELS ARE NOT REQUIRED TO DO FULL AUTO SHUT-OFF.

5PP — PUBLIC RESTROOM

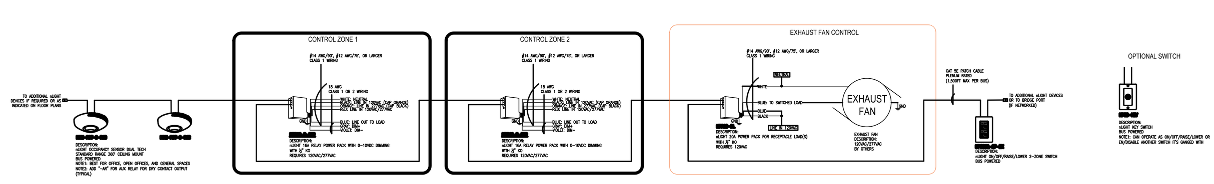

(NTS) TYPICAL PUBLIC RESTROOM USING nLIGHT POWER PACK CONTROLLING LIGHTS AND EXHAUST FAN

REFER TO PLANS FOR TYPES AND QUANTITIES

T24 COMPLIANT SEQUENCE OF OPERATION:

1. OCCUPANCY SENSOR PROVIDES AUTOMATIC ON/OFF OF LIGHTS AND EXHAUST FAN BASED ON ROOM OCCUPANCY (USE DEFAULT TIME DELAY FOR OCCUPANCY SENSOR) .
2. SWITCH PROVIDES MANUAL OVERRIDE OF THE LIGHTS (ON/OFF/RAISE/LOWER) .
3. MANUAL DIMMING OF LIGHTS IS OPTIONAL.

8PP-EM — EXTERIOR LIGHTS W/ FEW ZONES & EM (INV/GEN)

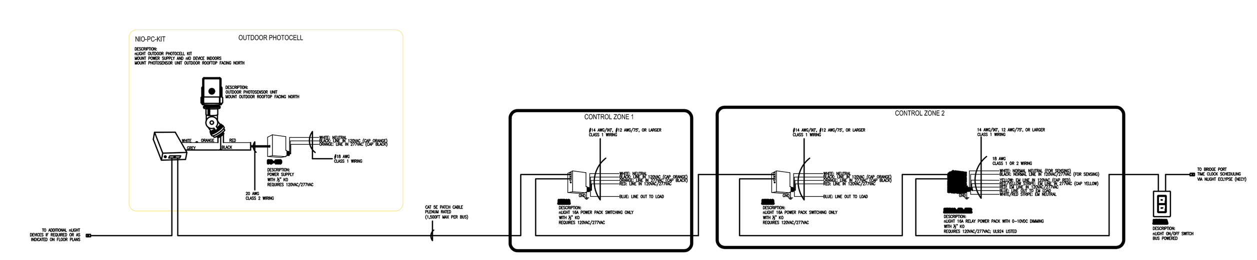

(NTS) EXTERIOR LIGHTS W/ EM SOURCE (INVERTER/GENERATOR)

REFER TO PLANS FOR TYPES AND QUANTITIES

T24 COMPLIANT SEQUENCE OF OPERATION:

1. PHOTOCELL OR ASTRONOMICAL TIME-SWITCH CONTROL SHALL AUTOMATICALLY SHUT-OFF EXTERIOR LIGHTING WHEN DAYLIGHT IS AVAILABLE.
2. AUTOMATIC SCHEDULING CONTROLS VIA TIME CLOCK AT NLIGHT ECLYPSE CONTROLLER (NECY) SHALL REDUCE LIGHTING POWER BY 50%-90% AND FULL OFF DURING UNOCCUPIED TIMES.
3. AUTOMATIC SCHEDULING CONTROLS VIA TIME CLOCK AT NLIGHT ECLYPSE CONTROLLER (NECY) SHALL ALLOW SCHEDULING OF A MINIMUM OF TWO NIGHTTIME PERIODS AT DIFFERENT LIGHTING LEVELS.
4. SYSTEM MAY INCLUDE AN OVERRIDE FUNCTION WALL SWITCH THAT TURNS LIGHT ON FOR 2 HOURS MAX DURING DIMMED OR OFF STATE.
5. UPON LOSS OF NORMAL POWER, ALL "-ER" POWER PACK (S) SHALL SHUNT CLOSED AND KEEP 0-10VDC DIMMING AT HIGH END TRIM LEVEL.

nLIGHT SYSTEM NOTE:

1. IF APPLICABLE, EXTERIOR LIGHTING MAY NEED TO COMPLY WITH T24 2019 PART 6 SECTION 130.2c3 MOTION SENSOR CONTROLS NOT SHOWN IN THIS DIAGRAM.

STANDALONE

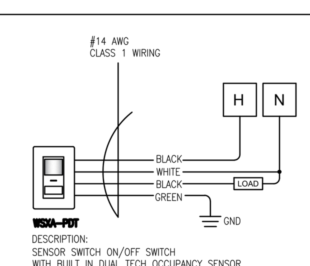

(NTS) TYPICAL UNISEX RESTROOM, IT ROOM, OR SIMILAR SMALL NON-DIMMING ROOM USING LINE VOLTAGE SENSORED SWITCH

REFER TO PLANS FOR TYPES AND QUANTITIES

T24 COMPLIANT SEQUENCE OF OPERATION:

1. OCCUPANCY SENSOR PROVIDES AUTOMATIC ON/OFF OF LIGHTS BASED ON ROOM OCCUPANCY (USE DEFAULT TIME DELAY FOR OCCUPANCY SENSOR) .
2. WSX-PDT LINE VOLTAGE SWITCH PROVIDES MANUAL OVERRIDE OF THE LIGHTS: ON/OFF.

NLIGHT Device Schedule

LIGHTING CONTROL DEVICE SCHEDULE

LOAD CONTROLLERS

PRODUCT	SYMBOL TAG	DESCRIPTION	VOLTAGE/ SOURCE	CONTROL CONNECTION	PRODUCT IMAGE
NPP16-D-EFP 0-10VDC DIMMING PACK	nPD	Product: NLIGHT NPP16-D-EFP Type: ON/OFF 0-10vdc Dimming Power Pack Relay Type: Single Zone; Latching Relay; Class 1 Rated 0-10vdc Load Rating: 16A @ 120/277vac Mounting: To J-Box via 1/2" KO	120/277VAC	CAT5E	
NPP16-D-ER-EFP 0-10VDC DIMMING PACK EM UL924	nPD ER	Product: NLIGHT NPP16-D-ER-EFP Type: ON/OFF 0-10vdc Dimming Power Pack for EM Load UL924 Listed Relay Type: Single Zone; Latching Relay; Class 1 Rated 0-10vdc Load Rating: 16A @ 120/277vac; UL924 Listed Mounting: To J-Box via 1/2" KO Note 1: Requires normal hot for sensing and separate EM hot for load	NORMAL 120/277VAC AND EMERGENCY 120/277VAC	CAT5E	
NPP20-PL PLUG LOAD POWER PACK	nP PL	Product: NLIGHT NPP20-PL Type: ON/OFF Power Pack for Plug Load Receptacles Relay Type: Single Zone; Latching Relay Load Rating: 20A @ 120vac Mounting: To J-Box via 1/2" KO	120/277VAC	CAT5E	
NSP5-PCD-SERIES LINE VOLTAGE PHASE DIMMING PACK	nSP5 PCD	Product: NLIGHT NSP5-PCD SERIES Type: ON/OFF Line Voltage Phase Dimming Secondary Pack Relay Type: Single Zone Load Rating: Reverse Phase 475W 120vac; Forward Phase & MLV 575W 120vac, 1375W 277vac Mounting: To J-Box via 1/2" KO Note 1: Use -2W for Forward Phase, -MLV for MLV Dimming, -ELV120 for ELV Dimming Note 2: Requires Cat5e bus power from a Power Pack or Bus Power Supply NPS-80	120/277VAC (ELV IS 120V ONLY)	CAT5E	
ARP RELAY PANEL 8 OR 16 RELAYS/ZONES	ARP	Product: NLIGHT ARP-INTENC08-8FCR-MVOLT-1VB-SC-SM FOR 8 RELAY PANEL NLIGHT ARP-INTENC16-16FCR-MVOLT-1VB-SC-SM FOR 16 RELAY PANEL Type: ON/OFF 0-10vdc Dimming Relay Panel; Feed-Thru Panel, No Lugs Relay Type: 16-Zones Max; UL924 Listed; Field Configurable to 2-Pole and 3-Pole Relays Load Rating: 20A @ 120/277vac Mounting: NEMA1 Surface Mounted Backbox: 14.25"x14.25"x4" (8-Relay), 22.25"x14.25"x4" (16-Relay) Note 1: Feed power supply with unswitched normal line	120/277VAC	CAT5E	

SWITCHES

PRODUCT	SYMBOL TAG	DESCRIPTION	VOLTAGE/ SOURCE	CONTROL CONNECTION	PRODUCT IMAGE
NPODMA-DX 1-ZONE ON/OFF/DIMMER	nSA D	Product: NLIGHT NPODMA-DX Type: 1-Zone ON/OFF/RAISE/LOWER Switch Features: Buttons with Pilot LED Indicator Lights, Screwless Faceplate Mounting: Standard single-gang switch box	CAT5E BUS POWERED	CAT5E	
NPODMA-2P-DX 2-ZONE ON/OFF/DIMMER	nSA2P	Product: NLIGHT NPODMA-2P-DX Type: 2-Zone ON/OFF/RAISE/LOWER Switch Features: Buttons with Pilot LED Indicator Lights, Screwless Faceplate Mounting: Standard single-gang switch box	CAT5E BUS POWERED	CAT5E	
NPODMA-2S-DX 2-SCENE ON/OFF/DIMMER	nSA 2S	Product: NLIGHT NPODMA-2S-DX Type: 2-Scene ON/OFF/RAISE/LOWER Switch Features: Buttons with Pilot LED Indicator Lights, Screwless Faceplate Mounting: Standard single-gang switch box	CAT5E BUS POWERED	CAT5E	
NPODMA-4S-DX 4-SCENE ON/OFF/DIMMER	nSA4S	Product: NLIGHT NPODMA-4S-DX Type: 4-Scene ON/OFF/RAISE/LOWER Switch Features: Buttons with Pilot LED Indicator Lights, Screwless Faceplate Mounting: Standard single-gang switch box	CAT5E BUS POWERED	CAT5E	
NPODMA 1-ZONE ON/OFF	nSA	Product: NLIGHT NPODMA Type: 1-Zone ON/OFF Switch Features: Buttons with Pilot LED Indicator Lights, Screwless Faceplate Mounting: Standard single-gang switch box	CAT5E BUS POWERED	CAT5E	
NPOD-TOUCH 16-ZONE & 16-SCENE ON/OFF/DIMMER	nTOUCH	Product: NLIGHT NPOD-TOUCH Type: 16-Zone & 16-Scene ON/OFF/RAISE/LOWER Switch Features: Buttons with Pilot LED Indicator Lights, Screwless Faceplate Mounting: Standard single-gang switch box for switch and J-Box for power supply	120/277VAC POWER SUPPLY	CAT5E	

OCCUPANCY SENSORS

PRODUCT	SYMBOL TAG	DESCRIPTION	VOLTAGE/ SOURCE	CONTROL CONNECTION	PRODUCT IMAGE
NWSXA-PDT-LV-DX OS + ON/OFF/DIMMING	nSXPA	Product: NLIGHT NWSXA-PDT-LV-DX Type: Standard Coverage 180° Lens, Wall Mounted with Dual Technology Sensor + 1-Zone ON/OFF/RAISE/LOWER Switch Features: 20ft Small Motion, 36ft Large Motion Passive Infrared Detection and MicroPhonics Mounting: Standard single-gang switch box Note 1: Best for spaces where people are seated with minimal/small hand and body movements; e.g. Office, Conference Rm, Waiting, Restroom	CAT5E BUS POWERED	CAT5E	
NCM-PDT-9-RJB STANDARD OS	nCP 9	Product: NLIGHT NCM-PDT-9-RJB Type: Standard Coverage 360° Lens, Ceiling Mounted with Dual Technology Sensor Features: 12ft Radial Passive Infrared Detection and MicroPhonics Mounting: Ceiling surface mount to single-gang or octagonal box Note 1: Best for spaces where people are seated with minimal/small hand and body movements; e.g. Office, Conference Rm, Waiting, Restroom Note 2: Add -ADCX for photocell capability; add -AR for low voltage aux relay (dry contact output)	CAT5E BUS POWERED	CAT5E	8-15ft MTG HT
NCM-PDT-10-RJB EXTENDED OS	nCP 10	Product: NLIGHT NCM-PDT-10-RJB Type: Standard Coverage 360° Lens, Ceiling Mounted with Dual Technology Sensor Features: 28ft Radial Passive Infrared Detection and MicroPhonics Mounting: Ceiling surface mount to single-gang or octagonal box Note 1: Best for spaces where people are walking and not stationary; e.g. Corridor, Stair Note 2: Add -ADCX for photocell capability; add -AR for low voltage aux relay (dry contact output)	CAT5E BUS POWERED	CAT5E	8-15ft MTG HT
NCM-6-RJB HIGH MOUNT OS	nC6	Product: NLIGHT NCM-6-RJB Type: Low/High Bay Coverage 360° Lens, Ceiling Mount Features: 20ft Radial Passive Infrared Detection for Mounting Heights > 15ft to 45ft Mounting: Ceiling surface mount to single-gang or octagonal box Note 1: Best for spaces with ceiling heights > 15ft to 45ft; e.g. Warehouse, Atrium, Library Note 2: Add -ADCX for photocell capability; add -AR for low voltage aux relay (dry contact output)	CAT5E BUS POWERED	CAT5E	> 15ft MTG HT

PHOTOCELLS

PRODUCT	SYMBOL TAG	DESCRIPTION	VOLTAGE/ SOURCE	CONTROL CONNECTION	PRODUCT IMAGE
NCM-ADCX-RJB INDOOR DIMMING PHOTOCELL	nCM ADC	Product: NLIGHT NCM-ADCX-RJB Type: Indoor Automatic Dimming Control Daylight Sensor, Ceiling Mount Features: Dual Zone Capable for Primary and Secondary Daylit Zone Mounting: Ceiling surface mount to single-gang or octagonal box	CAT5E BUS POWERED	CAT5E	
LSA-APS-OL ON/OFF OUTDOOR PHOTOCELL FOR ARP-PANEL	LSA APS	Product: Acuity Brands LSA-APS-OL Type: ON/OFF Outdoor Photocell Features: Analog input for nLIGHT ARP Relay Panel; 0-1000Fc Mounting: Mount photocell unit to approved weatherproof outdoor box via 1/2" KO; rooftop facing North	24VDC	CAT5E	
NIO-PC-KIT OUTDOOR ON/OFF PHOTOCELL	NIO PCK	Product: NLIGHT NIO-PCT-KIT Type: ON/OFF Outdoor Photocell Features: Kit includes photocell unit, NIO-NLI device, and PS-150 power supply Mounting: Mount photocell unit to approved weatherproof outdoor box via 1/2" KO; mount NIO-NLI device indoors; mount PS-150 to J-Box via 1/2" KO indoors	120/277VAC	CAT5E	

NETWORK BACKBONE

PRODUCT	SYMBOL TAG	DESCRIPTION	VOLTAGE/ SOURCE	CONTROL CONNECTION	PRODUCT IMAGE
NLIGHT ECLYPSE (NECY) TIME CLOCK/BACNET/ADR	nECY GFXK ADR BAC	Product: NLIGHT NECY-MOLT-BAC-ADR-ENC-GFXK Type: Main IP Controller; Astronomical Time Clock; BACnet IP/MSTP; ADR 2.0 Compliant Features: Up to 750 nLight Devices/Enabled Fixtures per NECY; CA SB-327 Compliant Mounting: NEMA1 Surface Mounted Backbox: 14.25"x14.25"x4" Note 1: Remove "BAC" option if BMS integration capability is NOT required Note 2: Remove "ADR" option if Automatic Demand Response capability is NOT required	120/277VAC	CAT5E	
NBRG-8-KIT 8-PORT BRIDGE	nBG	Product: NLIGHT NBRG-8-KIT Type: 8-Port Network Bridge Features: Bridges NECY Controller to other Bridges and/or nLight devices downstream via Cat5e Mounting: Surface mount Bridge to 4"x4" square box; mount included PS-150 power supplyto J-Box via 1/2" KO indoors	120/277VAC	CAT5E	

STANDALONE LINE VOLTAGE SWITCHES

PRODUCT	SYMBOL TAG	DESCRIPTION	VOLTAGE/ SOURCE	CONTROL CONNECTION	PRODUCT IMAGE
WSXA-PDT OS + ON/OFF 1-ZONE	WSXA	Product: SENSORSWITCH WSXA-PDT Type: Standard Coverage 180° Lens, Wall Mounted with Dual Technology Sensor + 1-Zone ON/OFF Switch Features: 20ft Small Motion, 36ft Large Motion Passive Infrared Detection and MicroPhonics Load Rating: 800W, 6.7A @ 120vac; 1200W, 4.3A @ 277vac Mounting: Standard single-gang switch box Note 1: Best for standalone unisex restrooms, janitor closet, small rooms with no dimming required	120/277VAC	NONE	
WSXA-PDT-2P OS + DUAL ON/OFF 2-ZONE	WSXA 2P	Product: SENSORSWITCH WSXA-PDT-2P Type: Standard Coverage 180° Lens, Wall Mounted, Dual Tech Sensor + 2-Zone ON/OFF Switch Features: 20ft Small Motion, 36ft Large Motion Passive Infrared Detection and MicroPhonics Mounting: Standard single-gang switch box Load Rating: 800W, 6.7A @ 120vac; 1200W, 4.3A @ 277vac Note 1: Best for standalone unisex restrooms, janitor closet, small rooms with no dimming required Note 2: Hot leads for both poles are required to be from the same line feed circuit	120/277VAC	NONE	

MISCELLANEOUS DEVICES

PRODUCT	SYMBOL TAG	DESCRIPTION	VOLTAGE/ SOURCE	CONTROL CONNECTION	PRODUCT IMAGE
NIO-BT NLIGHT BLUETOOTH LOCAL COMMISSIONING KIT	NIO BT	Product: NLIGHT NIO-BT Type: Bluetooth low engergy communication module for local commissioning of nLIGHT room/space Note 1: Keep with authorized personnel or secured after project turnover.	BUS POWERED	CAT5E	
ETS20 EM BYPASS SHUNT RELAY	ETS 20	Product: IOTA ETS20 Type: Emergency Bypass Shunt Relay UL924 Listed Relay Type: Single Zone Load Rating: 8A @120/277VAC (LED Driver); 10A @120VAC (Incandescent Load) Mounting: To J-Box via 1/2" KO Note 1: Requires normal hot for sensing and separate EM hot for load	NORMAL 120/277VAC AND EMERGENCY 120/277VAC	NONE	

LIGHTING CONTROL DIAGRAMS

NLIGHT BUS (ROOM/AREA)

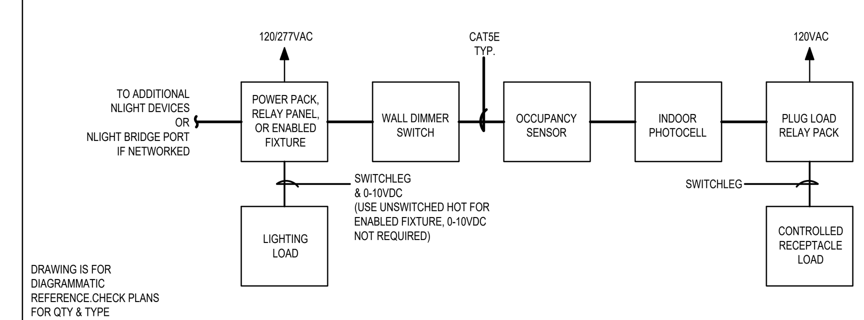

NLIGHT NETWORK BACKBONE

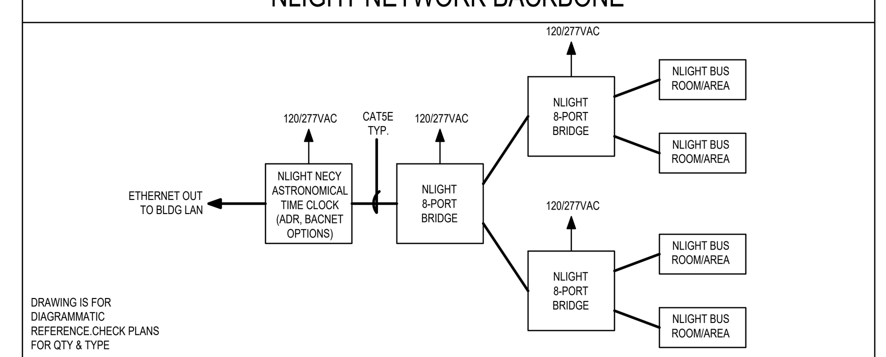

CONTROL SYSTEM NOTES

1. LIGHTING CONTROL SYSTEM SHALL BE ACUITY BRANDS NLIGHT.
2. ALL CAT5E DEVICES TO BE CONNECTED IN A DAISY CHAIN PATTERN SO THAT THE FIRST AND LAST DEVICE IN THE CHAIN HAS AN OPEN PORT..
3. CONTRACTOR IS RESPONSIBLE FOR ALL CONTROL TERMINATIONS. NO SPLICES ARE PERMITTED IN CONTROL WIRING.
4. POWER AND CONTROL CONDUCTORS MUST NOT SHARE THE SAME RACEWAY OR CONDUIT EXCEPT WHERE ALLOWED.
5. VERIFY MAXIMUM CABLE LENGTHS BASED ON CONTROL SYSTEM PARAMETERS. MANUFACTURER IS NOT RESPONSIBLE FOR SYSTEMS EXCEEDING PARAMETERS.
6. ALL DEVICES HAVE RJ-45 FEMALE PORTS. MAKING NETWORK CONTROL CABLES IS REQUIRED, T568B TERMINATIONS IS REQUIRED.
7. DAISY-CHAINED DEVICES SHOULD BE POWERED UP AND WORKING ON DEFAULT PROGRAMMING PRIOR TO CONNECTION TO BRIDGE OR ECLYPSE(S).
8. MAXIMUM CABLE LENGTH FROM START DEVICE TO END DEVICE IS 1,500FT INCLUDING HOMERUN TO BRIDGE DEVICE, IF PRESENT.
9. SINGLE LINE DRAWING FOR DIAGRAMMATIC PURPOSES AND DETAIL REFERENCE ONLY. REFER TO PLANS FOR TYPES AND QUANTITIES.
10. CONTRACTOR SHALL VERIFY WITH THE MANUFACTURER TYPE AND QUANTITY OF OCCUPANCY AND/OR PHOTOCELL SENSORS TO ENSURE 100% COVERAGE OF THE SPACE(S) WHERE SHOWN CONTROLLED BY OCCUPANCY SENSOR(S).
11. CONTRACTOR SHALL VERIFY DIMMING COMPATIBILITY BETWEEN DIMMING POWER PACK AND LIGHTING LOAD PRIOR TO PURCHASE OF EQUIPMENT.
12. ONSITE SYSTEM STARTUP, PROGRAMMING AND END USER TRAINING SHALL BE PERFORMED BY FACTORY AUTHORIZED TECHICIAN/REPRESENTATIVE. CONTRACTOR SHALL INCLUDE THIS SERVICE LINE ITEM IN THEIR BID PACKAGE.
13. ELECTRICAL CONTRACTOR SHALL SEND ELECTRICAL PLANS/INFORMATION AND REQUEST FOR QUOTE TO ELECTRICAL DISTRIBUTOR/SUPPLIER(S) . ELECTRICAL DISTRIBUTOR/SUPPLIER(S) SHALL CONTACT PERFORMANCE LIGHTING SYSTEM AT QUOTES@PERFORMANCELTG.COM FOR PRICING. CONTACT EmadN@PERFORMANCELTG.COM FOR ASSISTANCE ON LTG/CONTROLS.

LIGHTING CONTROL DETAILS | NTS | 1

APPROVAL

CITY APPROVED BY:

DIRECTOR OF PUBLIC WORKS DATE

CITY REVIEWED BY:

SENIOR ENGINEER DATE

SUBMITTED BY:

DATE

CLIENT

LANCASTER — Creating a better tomorrow. Together.

CITY OF LANCASTER

44933 FERN AVENUE
LANCASTER, CA 93534

PROJECT NAME

SAMARITAN'S PURSE PARK FORMERLY KNOWN AS EL DORADO PARK RENOVATION

PWCP NO. 24-008

44501 5th STREET EAST
LANCASTER, CA 93535

ENGINEER/ARCHITECT

IDS

IDS GROUP

1 PETERS CANYON ROAD, SUITE 130
IRVINE, CA. 92606
TEL: 949-387-8500, FAX: 949-387-0800

STAMP

REGISTERED PROFESSIONAL ENGINEER — STEVEN M. COLLINS — No. E22808 — Exp. 06-30-25 — ELECTRICAL — STATE OF CALIFORNIA

DATE SIGNED 09-23-23

ISSUE

REV.	DESCRIPTION	DATE
	30% CD SET	12/15/23
	60% CD SET	01/19/24
	90% CD SET	02/26/24
1	CLIENT REVISION	04/26/24
2	BID SET	09/10/24
3	BULLETIN #1	10/25/24
4	BULLETIN #1 R1	2/14/25
	COMPOSITE SET	9/24/25

PROJECT IDENTIFICATION

THIS DRAWING WAS CREATED IN AUTODESK AUTOCAD V. 2021 UNLESS OTHERWISE NOTED.

THE ORIGINAL SIZE OF THIS SHEET IS 30" X 42"

THESE DRAWINGS AND SPECIFICATIONS ARE THE PROPERTY AND COPYRIGHT OF IDS GROUP AND SHALL NOT BE USED ON ANY OTHER PROJECT OR LOCATIONS EXCEPT AS DESCRIBED ON THE DRAWINGS, WITHOUT THE WRITTEN AGREEMENT WITH IDS GROUP.

IDS PROJECT NO.	22X099.01
IDS DRAWN BY	SM
IDS CHECKED BY	SM
IDS APPROVED BY	SC

SHEET TITLE

ELECTRICAL LIGHTING CONTROL DETAILS

SHEET NUMBER

E-07.1

SHEET NO. 16 OF 18

CUMULATIVE SHEET NO. XXX OF XXX

PROGRESS SET - NOT FOR CONSTRUCTION

IDS GROUP - FILE LOCATION: S:\PROJECTS\2022\SHARED\22X099.01 LANC - EL DORADO PARK\05 CAD\05 ELEC\2023-12-05-EXISTING CC FILES\E-07.1 SHEET 13 LTG CONTROL PLOT DATE: 12/5/2024 7:24:05 PM USER: MICHAEL.REED

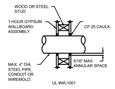

PENETRATION THRU GYPSUM BOARD WALL
NO SCALE

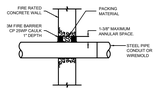

PENETRATION THRU CONCRETE WALL
NO SCALE

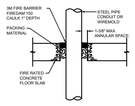

PENETRATION THRU CONCRETE FLOOR
NO SCALE

(FORMERLY SYSTEM NO. 147)
F RATINGS – 1,2,3, AND 4 HR (SEE ITEMS 2 AND 3)
T RATINGS – 0,1,2,3, AND 4 HR (SEE ITEM 3)
L RATING AT AMBIENT – LESS THAN 1 CFM/SQ FT (SEE ITEM 3)
L RATING AT 400 F – LESS THAN 1 CFM/SQ FT (SEE ITEM 3)

1. WALL ASSEMBLY – THE 1,2,3 OR 4 HR FIRE –RATED GYPSUM WALL BOARD/STUD WALL ASSEMBLY SHALL BE CONSTRUCTED OF THE MATERIALS AND IN THE MANNER DESCRIBED IN THE INDIVIDUAL U300 OR U400 SERIES WALL OR PARTITION DESIGN IN THE UL FIRE RESISTANCE DIRECTORY AND SHALL INCLUDE THE FOLLOWING CONSTRUCTION FEATURES :
   A. STUDS – WALL FRAMING MAY CONSIST OR EITHER WOOD STUDS (MAX.2 HR FIRE RATED ASSEMBLIES) OR STEEL CHANNEL STUDS. WOOD STUDS TO CONSIST OF NOM 2 BY 4 IN. LUMBER SPACED IN 18 IN. OC WIT NOM 2 BY 4 IN. LUMBER AND PLATES AND CROSS BRACES. STEEL STUDS TO BE MIN 3–8/8 IN. WIDE BY 1–3/8 IN. DEEP CHANNELS SPACED MAX 24 IN. CC .
   B. WALLBOARD, GYPSUM – NOM 1/2 OR 8/8 IN.THICK , 4 FT.WIDE WITH SQUARE OR TAPERED EDGES. THE GYPSUM WALLBOARD RYPS, THICKNESS,NUMBER OF LAYERS, FASTENER TYPE AND SHEET ORIENTATION SHALL BE SPECIFIED IN THE INDIVIDUAL U300 OR U400 SERIES DESIGN IN THE UL FIRE RESISTANCE DIRECTORY . MAX DIA. OF OPENING IS 13–1/2 IN.
2. PIPE OR CONDUIT – NOM 12 IN.DIA.(OR SMALLER) SCHEDULE 10(OR HAVIER)STEEL PIPE NOM 6 IN.DIA.(OR SMALLER) STEEL CONDUIT, NOM 4 IN. DIA. (OR SMALLER) STEEL ELECTRICAL METALLIC TUBING OR TYPE L OR (OR HEAVIER) COPPER TUBING NOM1 IN.DIA. (OR SMALLER) FLEXIBLE STEEL CONDUIT . WHEN COPPER PIPE OR FLEXIBLE STEEL CONDUIT IS USED , MAX F RATING OF FIRESTOP SYSTEM (ITEM STRUCTED USING STEEL CHANNEL STUDS. A MAX OF ONE PIPE OR CONDUIT IS PERMITTED IN THE FIRESTOP SYSTEM. PIPE OR CONDUIT TO BE INSTALLED NEAR CENTER OF STUD CAVITY WIDTH AND TO BE RIGIDLY SUPPORTED ON BOTH SIDES OF WALL ASSEMBLY .
3. FILL, VOID OR CAVITY MATERIAL – CAULK – CAULK FILL MATERIAL INSTALLED TO COMPLETELY FILL ANNULAR SPACE BETWEEN PIPE OR CONDUIT AND GYPSUM WALLBOARD AND WITH A MIN 1/4 IN. DIA. BOARD OF CAULK APPLIED TO PERIMETER OF PIPE OR CONDUIT AT ITS EGRESS FROM THE WALL. CAULK INSTALLED SYMMETRICALLY ON BOTH SIDES OF WALL ASSEMBLY. THE HOURLY F RATING OF THE FIRESTOP SYSTEM IS DEPENDENT UPON THE HOURLY FIRE RATING OF THE WALL ASSEMBLY IN WHICH IT IS INSTALLED, AS SHOWN IN THE FOLLOWING TABLE. THE HOURLY T RATING OF THE FIRESTOP SYSTEM IS DEPENDENT UPON THE TYPE OR SIZE OF THE PIPE OR CONDUIT AND THE HOURLY FIRE RATING OF THE WALL ASSEMBLY IN WHICH IT IS INSTALLED, AS TABULATED BELOW :

MAX PIPE OR CONDUIT DIA., IN	ANNULAR SPACE IN	F RATING HR	T RATING HR
1	0 TO 3/16	1 OR 2	0 + 1 OR 2
1	1/4 TO 1/2	3 OR 4	3 OR 4
4	0 TO 1/4	1 OR 2	0
6	1/4 TO 1/2	3 OR 4	0
12	3/16 TO 3/8	1 OR 2	0

+ WHEN COPPER PIPE IS USED , T RATING IS 0 NOM.
MINNESSOTA MINING & MFG. CO. – TYPES CP–25 S/L, CP–25 N/8 , CP–25 WS, CP–25 WS + (NOTE: L RATINGS APPLY WHEN TYPE CP–25 WS+ CAULK IS USED.)

FIRE-RATED WALL PENETRATION DETAIL | NTS | 7

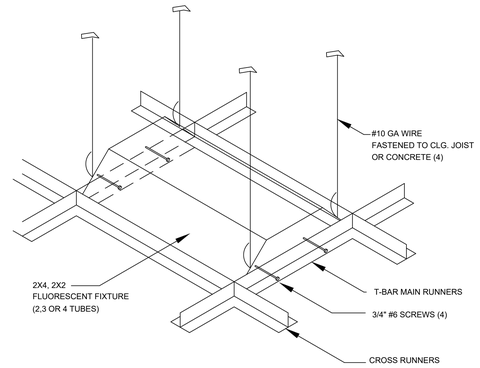

2X4 TROFFER CEILING FIXTURE SEISMIC BRACING | NTS | 6

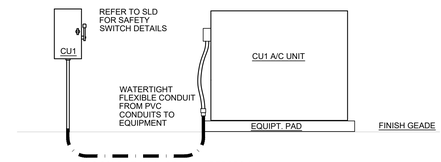

ELEVATION VIEW

DISCONNECT SWITCH MOUNTING DETAIL | NTS | 3

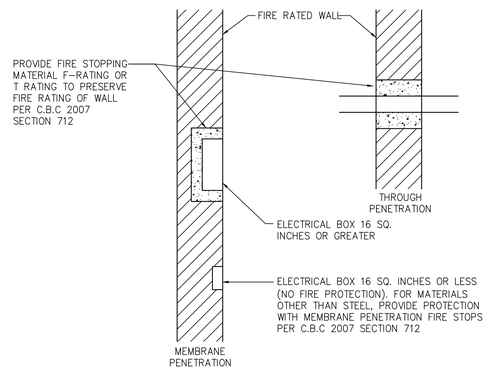

FIRE PENETRATION DETAIL | NTS | 8

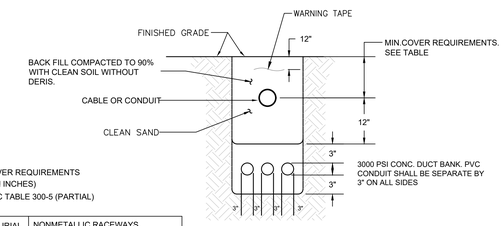

MINIMUM COVER REQUIREMENTS
(IN INCHES)
0-600 VOLTS, NEC TABLE 300-5 (PARTIAL)

LOCATION OF WIRING METHOD OR CIRCUIT	DIRECT BURIAL CABLES OR CONDUCTORS	NONMETALLIC RACEWAYS LISTED FOR DIRECT BURIAL WITHOUT CONCRETE ENCASEMENT OR OTHER APPROVED RACEWAYS
ALL LOCATIONS NOT SPECIFIED IN NEC TABLE 300-5	30	18
IN TRENCH BELOW 2" THICK CONCRETE OR EQUIVALENT	18	12
UNDER A BUILDING	0	0
UNDER STREETS, HIGHWAYS ROADS, ALLEYS, DRIVEWAYS, AND PARKING LOTS	24	24

ROOF RECEPTACLE | NTS | 2

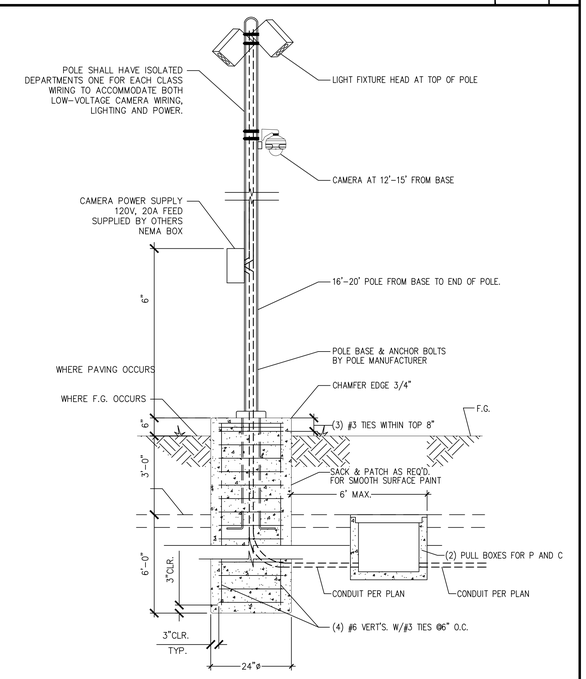

TYPICAL TRENCHING & CONDUIT DETAILS | NTS | 1

APPROVAL

CITY APPROVED BY:
DIRECTOR OF PUBLIC WORKS DATE
CITY REVIEWED BY:
SENIOR ENGINEER DATE
SUBMITTED BY:
DATE

CLIENT
LANCASTER
Creating a better tomorrow. Together.
CITY OF LANCASTER
44933 FERN AVENUE
LANCASTER, CA 93534

PROJECT NAME
SAMARITAN'S PURSE PARK FORMERLY KNOWN AS EL DORADO PARK RENOVATION
PWCP NO. 24-008
44501 5th STREET EAST
LANCASTER, CA 93535

ENGINEER/ARCHITECT
IDS
IDS GROUP
1 PETERS CANYON ROAD, SUITE 130
IRVINE, CA. 92606
TEL: 949-387-8500, FAX: 949-387-0800

STAMP
REGISTERED PROFESSIONAL ENGINEER STEVEN M. COLLINS No. E22808 Exp. 06/30/24 ELECTRICAL STATE OF CALIFORNIA
DATE SIGNED 09-23-23

ISSUE

REV.	DESCRIPTION	DATE
	30% CD SET	12/15/23
	60% CD SET	01/19/24
	90% CD SET	02/26/24
1	CLIENT REVISION	04/26/24
2	BID SET	09/10/24
3	BULLETIN #1	10/25/24
4	BULLETIN #1 R1	2/14/25
	COMPOSITE SET	9/24/25

PROJECT IDENTIFICATION
THIS DRAWING WAS CREATED IN AUTODESK AUTOCAD V. 2021 UNLESS OTHERWISE NOTED.
THE ORIGINAL SIZE OF THIS SHEET IS 30" X 42"
THESE DRAWINGS AND SPECIFICATIONS ARE THE PROPERTY AND COPYRIGHT OF IDS GROUP AND SHALL NOT BE USED ON ANY OTHER PROJECT OR LOCATIONS EXCEPT AS DESCRIBED ON THE DRAWINGS, WITHOUT THE WRITTEN AGREEMENT WITH IDS GROUP.

IDS PROJECT NO.	22X099.01
IDS DRAWN BY	SM
IDS CHECKED BY	SM
IDS APPROVED BY	SC

SHEET TITLE
ELECTRICAL DETAILS

SHEET NUMBER
E-07.2
SHEET NO. 16 OF 18
CUMULATIVE SHEET NO. XXX OF XXX

PROGRESS SET - NOT FOR CONSTRUCTION

IDS GROUP - FILE LOCATION: S:\PROJECTS\2022\SHARED\22X099.01 LANC - EL DORADO PARK\05 CAD\05 ELEC\2023-12-05-EXISTING CC FILES\E-07.2 SHEET 14 DETAILS PLOT DATE: 12/5/2024 7:23:35 PM USER: MICHAEL.REED

F. INDOOR LIGHTING FIXTURE SCHEDULE

This table includes all planned permanent and portable lighting other than dwelling unit/ hotel/ motel room lighting. Multifamily dwelling unit and hotel/motel room lighting is documented in Table T. If using Table T to document lighting in multifamily common use areas providing shared provisions for living, eating, cooking or sanitation, those luminaires are not included here.

Designed Wattage: Conditioned Spaces

01	02	03	04	05	06	07	08	09	10	
Name or Item Tag	Complete Luminaire Description	Modular (Track) Fixture	Small Aperture & Color Change[1]	Watts per luminaire[2]	How is Wattage determined	Total Number of Luminaires	Excluded per 140.6(a)3 / 170.2(e)2C	Design Watts	Field Inspector	
									Pass	Fail
d	8.5FT PENDANT CHAIN LINEAR DIRECT	No	NA	51	Mfr. Spec	9	No	459	☐	☐
							Total Designed Watts: CONDITIONED SPACES	459		

Designed Wattage: Unconditioned Spaces

01	02	03	04	05	06	07	08	09	10	
Name or Item Tag	Complete Luminaire Description	Modular (Track) Fixture	Small Aperture & Color Change[1]	Watts per luminaire[2]	How is Wattage determined	Total Number of Luminaires	Excluded per 140.6(a)3 / 170.2(e)2C	Design Watts	Field Inspector	
									Pass	Fail
a	CEILING MOUNT DOWNLIGHT	No	NA	11.3	Mfr. Spec	1	No	11.3	☐	☐
b	WALL MOUNT 4 FT FIXTURE	No	NA	50	Mfr. Spec	4	No	200	☐	☐
c	PENDANT 4FT LINEAR DIRECT	No	NA	41	Mfr. Spec	4	No	164	☐	☐
							Total Designed Watts: UNCONDITIONED SPACES	375.3		

[1]FOOTNOTE: Design Watts for small aperture and color changing luminaires which qualify per 140.6(a)4B / 170.2(e)2D is adjusted to be 75% /80% of their rated wattage. Table F automatically makes this adjustment, the permit applicant should enter full rated wattage in column 05.

[2]Authority Having Jurisdiction may ask for Luminaire cut sheets to confirm wattage used for compliance per 130.0(c) / 160.5(b). Wattage used must be the maximum rated for the luminaire, not the lamp.

G. MODULAR LIGHTING SYSTEMS

This section does not apply to this project.

C. COMPLIANCE RESULTS

If any cell on this table says "DOES NOT COMPLY" or "COMPLIES with Exceptional Conditions" refer to Table D. for guidance.

Lighting in conditioned and unconditioned spaces must not be combined for compliance per 140.6(b)1 / 170.2(e)	Allowed Lighting Power per 140.6(b) / 170.2(e) (Watts)						Adjusted Lighting Power per 140.6(a) / 170.2(e) (Watts)					Compliance Results
	01	02	03	04		05		06	07		08	09
	Complete Building 140.6(c)1	Area Category 140.6(c)2 / 170.2(e)4	Area Category Additional 140.6(c)2G / 170.2(e)4Av (+)	Tailored 140.6(c)3 / 170.2(e)4B (+)	=	**Total Allowed** (Watts)	≥	Total Designed (Watts)	Adjustments PAF Lighting Control Credits 140.6(a)2 / 170.2(e)1B (-)	=	**Total Adjusted** (Watts) *Includes Adjustments	**05 must be >= 08 140.6 / 170.2(e)**
	(See Table I)	(See Table I)	(See Table J)	(See Table K)				(See Table F)	(See Table P)			
Conditioned		487.5			=	487.5	≥	459		=	459	COMPLIES
Unconditioned		421.9			=	421.9	≥	375.3		=	375.3	COMPLIES
Controls Compliance (See Table H for Details)												COMPLIES
Rated Power Reduction Compliance (See Table Q for Details)												

D. EXCEPTIONAL CONDITIONS

This table is auto-filled with uneditable comments because of selections made or data entered in tables throughout the form.

E. ADDITIONAL REMARKS

This table includes remarks made by the permit applicant to the Authority Having Jurisdiction.

This document is used to demonstrate compliance with requirements in 110.9, 110.12(c), 130.0, 130.1, 140.6 and 141.0(b)2 for indoor lighting scopes using the prescriptive path for nonresidential and hotel/motel occupancies. It is also used to document compliance with requirements in 160.5, 170.2(e) and 180.2(b)4 for indoor lighting scopes using the prescriptive path for multifamily occupancies. Multifamily includes dormitory and senior living facilities.

A. GENERAL INFORMATION

01	Project Location (city)	Long Beach	04 Total Conditioned Floor Area (ft²)	1,175
02	Climate Zone	8	05 Total Unconditioned Floor Area (ft²)	438
03	Occupancy Types Within Project (select all that apply):		06 # of Stories (Habitable Above Grade)	0

● Classroom

B. PROJECT SCOPE

This table includes any lighting systems that are within the scope of the permit application and are demonstrating compliance using the prescriptive path outlined in 140.6 / 170.2(e) or 141.0(b)2 / 180.2(b)4 for alterations.

Scope of Work	Conditioned Spaces		Unconditioned Spaces	
01	02	03	04	05
My Project Consists of (check all that apply):	Calculation Method	Area (ft²)	Calculation Method	Area (ft²)
☒ New Lighting System	Area Category Method	1175	Area Category Method	438
☐ New Lighting System - Parking Garage	N/A	0	N/A	0
Total Area of Work (ft²)	1175		438	

J. ADDITIONAL ALLOWANCE: AREA CATEGORY METHOD QUALIFYING LIGHTING SYSTEM

This section does not apply to this project.

K. TAILORED METHOD GENERAL LIGHTING POWER ALLOWANCE

This section does not apply to this project.

L. ADDITIONAL LIGHTING ALLOWANCE: TAILORED WALL DISPLAY

This section does not apply to this project.

M. ADDITIONAL LIGHTING ALLOWANCE: TAILORED FLOOR AND TASK LIGHTING

This section does not apply to this project.

N. ADDITIONAL LIGHTING ALLOWANCE: TAILORED DECORATIVE /SPECIAL EFFECTS

This section does not apply to this project.

O. ADDITIONAL LIGHTING ALLOWANCE: TAILORED VERY VALUABLE MERCHANDISE

This section does not apply to this project.

P. POWER ADJUSTMENT: LIGHTING CONTROL CREDIT (POWER ADJUSTMENT FACTOR (PAF))

This section does not apply to this project.

Q. RATED POWER REDUCTION COMPLIANCE FOR ONE-FOR-ONE ALTERATIONS

This section does not apply to this project.

H. INDOOR LIGHTING CONTROLS (Not including PAFs)

	13
	Plan Sheet Showing Daylit Zones:

I. LIGHTING POWER ALLOWANCE: COMPLETE BUILDING OR AREA CATEGORY METHODS

Each area complying using the Complete Building or Area Category Methods per 140.6(b) are included in this table. Column 06 indicates if additional lighting power allowances per 140.6(c) or adjustments per 140.6(a) are being used .

Conditioned Spaces

01	02	03	04	05	06	
Area Description	Complete Building or Area Category Primary Function Area	Allowed Density (W/ft²)	Area (ft²)	Allowed Wattage (Watts)	Additional Allowance / Adjustment	
					Area Category	PAF
DIRECTORS OFFICE	Office (<=250 square feet)	0.65	200	130	No	No
CRAFTS ROOM	Lounge	0.55	650	357.5	No	No
		TOTALS:	850	487.5	See Tables J, or P for detail	

Unconditioned Spaces

01	02	03	04	05	06	
Area Description	Complete Building or Area Category Primary Function Area	Allowed Density (W/ft²)	Area (ft²)	Allowed Wattage (Watts)	Additional Allowance / Adjustment	
					Area Category	PAF
STORAGE ROOM 1	Storage - MF common areas	0.45	99	44.55	No	No
STORAGE ROOM 2	Storage - MF common areas	0.45	41	18.45	No	No
WOMENS TOILET	Restroom	0.65	208	135.2	No	No
EQUIPMENT STORAGE	Electrical Mechancial Telephone Room	0.4	151	60.4	No	No
ELECTRICAL EQUIPMENT ROOM	Electrical Mechancial Telephone Room	0.4	67	26.8	No	No
MENS TOILET	Restroom	0.65	210	136.5	No	No
		TOTALS:	776	421.9	See Tables J, or P for detail	

H. INDOOR LIGHTING CONTROLS (Not including PAFs)

This table includes lighting controls for conditioned and unconditioned spaces.

Building Level Controls

01	02	03	
Mandatory Demand Response 110.12(c)	Shut-off controls 130.1(c) / 160.5(b)4C	Field Inspector	
		Pass	Fail
NA < 4,000W subject to multilevel	See Area/Space Level Controls	☐	☐

Area Level Controls

04	05	06	07	08	09	10	11	12	
Area Description	Complete Building or Area Category Primary Function Area	Manual Area Controls 130.1(a) / 160.5(b)4A	Multi-Level Controls 130.1(b) / 160.5(b)4B	Shut-Off Controls 130.1(c) // 160.5(b)4C	Primary/Skylit Daylighting 130.1(d) / 160.5(b)4D	Secondary Daylighting 130.1(d) / 160.5(b)4D	Interlocked Systems 140.6(a)1/ 170.2(e)2A	Field Inspector	
								Pass	Fail
DIRECTORS OFFICE	Office (<=250 square feet)	Readily Accessible	Dimmer	Occupancy Sensor	NA: Not daylit zone	NA: Not daylit zone	No	☐	☐
STORAGE ROOM 1	Storage - MF common areas	Readily Accessible	NA: Enclosed area <100SF	Occupancy Sensor	NA: Not daylit zone	NA: Not daylit zone	No	☐	☐
CRAFTS ROOM	Lounge	Readily Accessible	Dimmer	Occupancy Sensor	NA: Not daylit zone	NA: Not daylit zone	No	☐	☐
STORAGE ROOM 2	Storage - MF common areas	Readily Accessible	NA: Enclosed area <100SF	Occupancy Sensor	NA: Not daylit zone	NA: Not daylit zone	No	☐	☐
WOMENS TOILET	Restroom	Auth. Personnel	NA: Restrooms	Occupancy Sensor	NA: Not daylit zone	NA: Not daylit zone	No	☐	☐
EQUIPMENT STORAGE	Electrical Mechancial Telephone Room	Readily Accessible	Dimmer	Occupancy Sensor	NA: Not daylit zone	NA: Not daylit zone	No	☐	☐
ELECTRICAL EQUIPMENT ROOM	Electrical Mechancial Telephone Room	Readily Accessible	Dimmer	Occupancy Sensor	NA: Not daylit zone	NA: Not daylit zone	No	☐	☐
MENS TOILET	Restroom	Auth. Personnel	NA: Restrooms	Occupancy Sensor	NA: Not daylit zone	NA: Not daylit zone	No	☐	☐

DOCUMENTATION AUTHOR'S DECLARATION STATEMENT

I certify that this Certificate of Compliance documentation is accurate and complete.

Documentation Author Name: Alan Lopez	Documentation Author Signature: Alan Lopez
Company: IDS Group Inc.	Signature Date:
Address:	CEA/ HERS Certification Identification (if applicable):
City/State/Zip:	Phone:

RESPONSIBLE PERSON'S DECLARATION STATEMENT

I certify the following under penalty of perjury, under the laws of the State of California:

1. The information provided on this Certificate of Compliance is true and correct.
2. I am eligible under Division 3 of the Business and Professions Code to accept responsibility for the building design or system design identified on this Certificate of Compliance (responsible designer)
3. The energy features and performance specifications, materials, components, and manufactured devices for the building design or system design identified on this Certificate of Compliance conform to the requirements of Title 24, Part 1 and Part 6 of the California Code of Regulations.
4. The building design features or system design features identified on this Certificate of Compliance are consistent with the information provided on other applicable compliance documents, worksheets, calculations, plans and specifications submitted to the enforcement agency for approval with this building permit application.
5. I will ensure that a completed signed copy of this Certificate of Compliance shall be made available with the building permit(s) issued for the building, and made available to the enforcement agency for all applicable inspections. I understand that a completed signed copy of this Certificate of Compliance is required to be included with the documentation the builder provides to the building owner at occupancy.

Responsible Designer Name:	Responsible Designer Signature:
Company:	Date Signed:
Address:	License:
City/State/Zip:	Phone:

V. DECLARATION OF REQUIRED CERTIFICATES OF ACCEPTANCE

Selections have been made based on information provided in this document. If any selections have been changed by the permit applicant, an explanation should be included in Table E. Additional Remarks. These documents must be provided to the building inspector during construction and any with "-A" in the form name must be completed through an Acceptance Test Technician Certification Provider (ATTCP). For more information visit: http://www.energy.ca.gov/title24/attcp/providers.html

Form/Title	Systems/Spaces To Be Field Verified
NRCA-LTI-02-A - Must be submitted for occupancy sensors and automatic time switch controls.	DIRECTORS OFFICE; STORAGE ROOM 1; CRAFTS ROOM; STORAGE ROOM 2; WOMENS TOILET; EQUIPMENT STORAGE; ELECTRICAL EQUIPMENT ROOM; MENS TOILET

R. 80% LIGHTING POWER FOR ALL ALTERATIONS - CONTROLS EXCEPTIONS

This section does not apply to this project.

S. DAYLIGHT DESIGN POWER ADJUSTMENT FACTOR (PAF)

This section does not apply to this project.

T. DWELLING UNIT LIGHTING

This section does not apply to this project.

U. DECLARATION OF REQUIRED CERTIFICATES OF INSTALLATION

Selections have been made based on information provided in this document. If any selections have been changed by permit applicant, an explanation should be included in Table E. Additional Remarks. These documents must be provided to the building inspector during construction and can be found online

Form/Title
NRCI-LTI-E - Must be submitted for all buildings

APPROVAL

CITY APPROVED BY:
DIRECTOR OF PUBLIC WORKS DATE
CITY REVIEWED BY:
SENIOR ENGINEER DATE
SUBMITTED BY:
DATE

CLIENT
LANCASTER
Creating a better tomorrow. Together.
CITY OF LANCASTER
44933 FERN AVENUE
LANCASTER, CA 93534

PROJECT NAME
SAMARITAN'S PURSE PARK FORMERLY KNOWN AS EL DORADO PARK RENOVATION
PWCP NO. 24-008
44501 5th STREET EAST
LANCASTER, CA 93535

ENGINEER/ARCHITECT
IDS
IDS GROUP
1 PETERS CANYON ROAD, SUITE 130
IRVINE, CA 92606
TEL: 949-387-8500, FAX: 949-387-0800

STAMP
REGISTERED PROFESSIONAL ENGINEER ALAN M. LOPEZ No. E22808 Exp. 06-30-24 ELECTRICAL STATE OF CALIFORNIA
DATE SIGNED 09-23-23

ISSUE

REV.	DESCRIPTION	DATE
	30% CD SET	12/15/23
	60% CD SET	01/19/24
	90% CD SET	02/26/24
1	CLIENT REVISION	04/26/24
2	BID SET	09/10/24
3	BULLETIN #1	10/25/24
4	BULLETIN #1 R1	2/14/25
	COMPOSITE SET	9/24/25

PROJECT IDENTIFICATION

THIS DRAWING WAS CREATED IN AUTODESK AUTOCAD V. 2021 UNLESS OTHERWISE NOTED.

THE ORIGINAL SIZE OF THIS SHEET IS 30" X 42"

THESE DRAWINGS AND SPECIFICATIONS ARE THE PROPERTY AND COPYRIGHT OF IDS GROUP AND SHALL NOT BE USED ON ANY OTHER PROJECT OR LOCATIONS EXCEPT AS DESCRIBED ON THE DRAWINGS, WITHOUT THE WRITTEN AGREEMENT WITH IDS GROUP.

IDS PROJECT NO.	22X099.01
IDS DRAWN BY	SM
IDS CHECKED BY	SM
IDS APPROVED BY	SC

SHEET TITLE
INDOOR TITLE 24 COMPLIANCE FORMS

SHEET NUMBER
E-08

SHEET NO. 17 OF 18
CUMULATIVE SHEET NO. XXX OF XXX

PROGRESS SET - NOT FOR CONSTRUCTION

IDS GROUP - FILE LOCATION: S:\PROJECTS\2022\SHARED\22X099.01 LANC - EL DORADO PARK\05 CAD\05 ELEC\2023-12-05-EXISTING CC FILES\E-08_E-08.1 SHEET 15-16 TITLE 24 PLOT DATE: 12/5/2024 7:23:44 PM USER: MICHAEL.REED

STATE OF CALIFORNIA
Outdoor Lighting
CALIFORNIA ENERGY COMMISSION

CERTIFICATE OF COMPLIANCE			**NRCC-LTO-E**
Project Name:	El Dorado Park Renovation	**Report Page:**	**(Page 3 of 9)**
Project Address:	44501 5th St E	**Date Prepared:**	7/24/2023

F. OUTDOOR LIGHTING FIXTURE SCHEDULE

For new or altered lighting systems demonstrating compliance with 140.7 / 170.2(e)6 all new luminaires being installed and any existing luminaires remaining or being moved within the spaces covered by the permit application are included in the Table below. For altered lighting systems using the Existing Power method per 141.0(b)2L only new luminaires being installed and replacement luminaires being installed as part of the project scope are included (ie, existing luminaires remaining or existing luminaires being moved are not included). Outdoor lighting attached to multifamily buildings and controlled from the inside of a dwelling unit are included in Table H. and are not included here. All other multifamily outdoor lighting is included here.

Designed Wattage:

01	02		03	04	05	06	07	08	09	10	
Name or Item Tag	Complete Luminaire Description		Watts per luminaire[1, 2]	How is Wattage determined	Total Number Luminaires [2]	Luminaire Status[3]	Excluded per 140.7(a) / 170.2(e)6A	Design Watts	Cutoff Req. > 6,200 initial lumen output 130.2(b) / 160.5(c)[4]	Field Inspector Pass	Fail
F10	F10 - 13.8W RECESSED DOWNLIGHT	☐ Linear	13.8	Mfr. Spec	1	New	☐	13.8	NA: < 6200 lumens	☐	☐
F14	F14 - 10.7W WALL MOUNT CYLINDER DOWNLIGHT	☐ Linear	10.7	Mfr. Spec	36	New	☐	385.2	NA: < 6200 lumens	☐	☐
F14A	F14A - 10.7W WALL MOUNT CYLINDER UPLIGHT/DOWNLIGHT	☐ Linear	10.7	Mfr. Spec	14	New	☐	149.8	NA: < 6200 lumens	☐	☐
F15	F15 - 7W WALL SCONCE	☐ Linear	7	Mfr. Spec	6	New	☐	42	NA: < 6200 lumens	☐	☐
F15A	F15A - 7W WALL SCONCE	☐ Linear	7	Mfr. Spec	1	New	☐	7	NA: < 6200 lumens	☐	☐
SF1	SF1 -	☐ Linear	0	Mfr. Spec	26	New	☐	0	NA: < 6200 lumens	☐	☐
SF2	SF2 - 85W 16' POLE MOUNTED FIXTURE	☐ Linear	85	Mfr. Spec	24	New	☐	2,040	NA: < 6200 lumens	☐	☐
SF3	SF3 - 161W 20' POLE MOUNTED FIXTURE	☐ Linear	161	Mfr. Spec	6	New	☐	966	NA: < 6200 lumens	☐	☐
								Total Design Watts:	3604		

Registration Number: | Generated Date/Time: | Documentation Software: EnergyPro
CA Building Energy Efficiency Standards - 2022 Nonresidential Compliance | Report Version: 2022.0.000 Schema Version: rev 20220101 | Compliance ID: EnergyPro-4443-0723-0284 Report Generated: 2023-07-24 16:39:13

STATE OF CALIFORNIA
Outdoor Lighting
CALIFORNIA ENERGY COMMISSION

CERTIFICATE OF COMPLIANCE			**NRCC-LTO-E**
Project Name:	El Dorado Park Renovation	**Report Page:**	**(Page 2 of 9)**
Project Address:	44501 5th St E	**Date Prepared:**	7/24/2023

C. COMPLIANCE RESULTS

Results in this table are automatically calculated from data input and calculations in Tables F through N. Note: If any cell on this table says "COMPLIES with Exceptional Conditions" refer to Table D. Exceptional Conditions for guidance or see applicable Table referenced below.

Calculations of Total Allowed Lighting Power (Watts) 140.7 / 170.2(e)6 or 141.0(b)2L / 180.2(b)4Bv																	
01		02		03		04		05		06		Compliance Results 07		08		09	
General Hardscape Allowance 140.7(d)1 / 170.2(e)6 (See Table I)	+	Per Application 140.7(d)2 / 170.2(e)6 (See Table J)	+	Sales Frontage 140.7(d)2 (See Table K)	+	Ornamental 140.7(d)2 / 170.2(e)6 (See Table L)	+	Per Specific Area 140.7(d)2 / 170.2(e)6 (See Table M)	OR	Existing Power Allowance 141.0(b)2L / 180.2(b)4Bv (See Table N)	=	**Total Allowed** (Watts)	≥	**Total Actual** (Watts)		**07 must be >= 08**	
3,557	+	---	+	---	+	---	+	368.8	OR	---	=	3,926	≥	3,604		COMPLIES	
Shielding Compliance (See Table G for Details)																N/A	
Controls Compliance (See Table H for Details)																Not applicable	

D. EXCEPTIONAL CONDITIONS

This table is auto-filled with uneditable comments because of selections made or data entered in tables throughout the form.

E. ADDITIONAL REMARKS

This table includes remarks made by the permit applicant to the Authority Having Jurisdiction.

Registration Number: | Generated Date/Time: | Documentation Software: EnergyPro
CA Building Energy Efficiency Standards - 2022 Nonresidential Compliance | Report Version: 2022.0.000 Schema Version: rev 20220101 | Compliance ID: EnergyPro-4443-0723-0284 Report Generated: 2023-07-24 16:39:13

STATE OF CALIFORNIA
Outdoor Lighting
CALIFORNIA ENERGY COMMISSION

CERTIFICATE OF COMPLIANCE			**NRCC-LTO-E**
Project Name:	El Dorado Park Renovation	**Report Page:**	**(Page 1 of 9)**
Project Address:	44501 5th St E	**Date Prepared:**	7/24/2023

This document is used to demonstrate compliance with requirements in 110.9, 130.0, 130.2, 140.7, and 141.0(b)2L for outdoor lighting scopes using the prescriptive path for nonresidential and hotel/motel occupancies. It is also used to document compliance with requirements in 160.5, 170.2(e)6, 180.1(a) and 180.2(b)4Bv for outdoor lighting scopes using the prescriptive path for multifamily and mixed-use occupancies. Multifamily includes dormitory and senior living facilities.

A. GENERAL INFORMATION

01	Project Location (city)	Lancaster	04	Total Illuminated Hardscape Area (ft^2)	131534
02	Climate Zone	14			
03	Outdoor Lighting Zone per Title 24 Part 1 10.114 or as designated by Authority Having Jurisdiction (AHJ):				
☐	LZ-0: Very Low - Undeveloped Parkland	☒ LZ-2: Moderate - Urban Clusters	☐ LZ-4: High - Must be reviewed by CA Energy Commission for Approval		
☐	LZ-1: Low - Rural Areas	☐ LZ-3: Moderately High - Urban Areas			
05	Occupancy Types within Project				
● Convention Center ● Data Center ● Office ● Support Areas ● Warehouse					

B. PROJECT SCOPE

This table includes outdoor lighting systems that are within the scope of the permit application and are demonstrating compliance using the prescriptive path outlined in 140.7 / 170.2(e)6 or 141.0(b)2L / 180.2(b)4Bv for alterations.

My Project Consists of:

01	02	
☒ New Lighting System	Must Comply with Allowances from 140.7 / 170.2(e)6	
☐ Altered Lighting System	Is your alteration increasing the connected lighting load (Watts)?	○ Yes ○ No
03	04	05
% of Existing Luminaires Being Altered[1]	Sum Total of Luminaires Being Added or Altered	Calculation Method
☐ < 10% ☐ >= 10% and < 50% ☐ >= 50%		

Please proceed to Table F. Outdoor Lighting Fixture Schedule to define the project's luminaires.

[1] FOOTNOTES: % of Existing Luminaires Being Altered = (Sum Total of Luminaires Being Added or Altered / Existing Luminaires within the Scope of the Permit Application) x 100.

Registration Number: | Generated Date/Time: | Documentation Software: EnergyPro
CA Building Energy Efficiency Standards - 2022 Nonresidential Compliance | Report Version: 2022.0.000 Schema Version: rev 20220101 | Compliance ID: EnergyPro-4443-0723-0284 Report Generated: 2023-07-24 16:39:13

STATE OF CALIFORNIA
Outdoor Lighting
CALIFORNIA ENERGY COMMISSION

CERTIFICATE OF COMPLIANCE			**NRCC-LTO-E**
Project Name:	El Dorado Park Renovation	**Report Page:**	**(Page 6 of 9)**
Project Address:	44501 5th St E	**Date Prepared:**	7/24/2023

I. LIGHTING POWER ALLOWANCE (per 140.7 / 170.2(e))

This table includes areas using allowance calculations per 140.7 / 170.2(e). General Hardscape Allowance is per Table 140.7-A/Table 170.2-R while "Use it or lose it" Allowances are per Table 140.7-B /Table 170.2-S. Indicate which allowances are being used to expand sections for user input. Luminaires that qualify for one of the "Use it or lose it" allowances shall not qualify for another "Use it or lose it" allowance.
Outdoor lighting attached to multifamily buildings and controlled from the inside of a dwelling unit are included in Table H. and are not included here. All other multifamily outdoor lighting is included here.

01				
	"Use it or lose it" Allowance (select all that apply) (select all that apply)			
☒ General Hardscape Allowance Table I (below)	☐ Per Application Table J	☐ Sales Frontage Table K	☐ Ornamental Table L	☒ Per Specific Area Table M

Calculated General Hardscape Lighting Power Allowance per Table 140.7-A for Nonresidential & Hotel/Motel

02	03	04	05	06	07	08	09
Area Description	Area Wattage Allowance (AWA)			Linear Wattage Allowance (LWA)			Total General AWA + LWA (Watts)
	Illuminated Area (ft^2)	Allowed Density (W/ft^2)	Area Allowance (Watts)	Perimeter Length (lf)	Allowed Density (W/lf)	Linear Allowance (Watts)	
Parking Lot	24543	0.019	466.3	690	0.2	103.5	570
Parking Lot Walkway	61229	0.019	1163.4	2541	0.2	381.2	1545
Initial Wattage Allowance for Entire Site (Watts):							200
Instances of Initial Wattage Allowance (LZ 0 only)[1]							
Total General Hardscape Allowance (Watts):							3557

J. LIGHTING ALLOWANCE: PER APPLICATION

This section does not apply to this project.

K. LIGHTING ALLOWANCE: SALES FRONTAGE

This section does not apply to this project.

L. LIGHTING ALLOWANCE: ORNAMENTAL

This section does not apply to this project.

Registration Number: | Generated Date/Time: | Documentation Software: EnergyPro
CA Building Energy Efficiency Standards - 2022 Nonresidential Compliance | Report Version: 2022.0.000 Schema Version: rev 20220101 | Compliance ID: EnergyPro-4443-0723-0284 Report Generated: 2023-07-24 16:39:13

STATE OF CALIFORNIA
Outdoor Lighting
CALIFORNIA ENERGY COMMISSION

CERTIFICATE OF COMPLIANCE			**NRCC-LTO-E**
Project Name:	El Dorado Park Renovation	**Report Page:**	**(Page 5 of 9)**
Project Address:	44501 5th St E	**Date Prepared:**	7/24/2023

H. OUTDOOR LIGHTING CONTROLS

This table demonstrates compliance with controls requirements for all new or altered luminaires installed as part of the permit application. For alteration projects, luminaires which are existing to remain (ie untouched) and luminaires which are removed and reinstalled (wiring only) do not need to be included in this table even if they are within the spaces covered by the permit application.
Outdoor lighting for nonresidential buildings, parking garages and common service areas in multifamily buildings must be documented separately from outdoor lighting attached to multifamily buildings and controlled from the inside of a dwelling unit

Mandatory Controls for Nonresidential Occupancies, Parking Garages & Common Areas in Multifamily Buildings

01	02	03	04	05	
Area Description	Shut-Off 130.2(c)1 / 160.5(c)	Auto-Schedule 130.2(c)2 / 160.5(c)	Motion Sensor 130.2(c)3 / 160.5(c)	Field Inspector Pass	Fail

[1] FOOTNOTE: Text has been abbreviated, please refer to Table 160.5-A to confirm compliance with the specific light source technologies listed.
[2] Authority having jurisdiction may ask for cutsheets or other documentation to confirm compliance of light source.
[3] Recessed luminaires marked for use in fire-rated installations, and recessed luminaires installed in non-insulated ceilings are excepted from ii and iii.

Registration Number: | Generated Date/Time: | Documentation Software: EnergyPro
CA Building Energy Efficiency Standards - 2022 Nonresidential Compliance | Report Version: 2022.0.000 Schema Version: rev 20220101 | Compliance ID: EnergyPro-4443-0723-0284 Report Generated: 2023-07-24 16:39:13

STATE OF CALIFORNIA
Outdoor Lighting
CALIFORNIA ENERGY COMMISSION

CERTIFICATE OF COMPLIANCE			**NRCC-LTO-E**
Project Name:	El Dorado Park Renovation	**Report Page:**	**(Page 4 of 9)**
Project Address:	44501 5th St E	**Date Prepared:**	7/24/2023

F. OUTDOOR LIGHTING FIXTURE SCHEDULE

For new or altered lighting systems demonstrating compliance with 140.7 / 170.2(e)6 all new luminaires being installed and any existing luminaires remaining or being moved within the spaces covered by the permit application are included in the Table below. For altered lighting systems using the Existing Power method per 141.0(b)2L only new luminaires being installed and replacement luminaires being installed as part of the project scope are included (ie, existing luminaires remaining or existing luminaires being moved are not included). Outdoor lighting attached to multifamily buildings and controlled from the inside of a dwelling unit are included in Table H. and are not included here. All other multifamily outdoor lighting is included here.

Designed Wattage:

01	02	03	04	05	06	07	08	09	10
* NOTES: Selections with a * require a note in the space below explaining how compliance is achieved. *EX: Luminaire is lighting a statue; EXCEPTION 2 to 130.2(b)*									

[1] FOOTNOTES: Authority Having Jurisdiction may ask for Luminaire cut sheets to confirm wattage used for compliance per 130.0(c) / 160.5(b)
[2] For linear luminaires, wattage should be indicated as W/lf instead of Watts/luminaire. Total linear feet should be indicated in column 05 instead of number of luminaires.
[3] Select "New" for new luminaires in a new outdoor lighting project, or for added luminaires in an alteration. Select "Altered" for replacement luminaires in an alteration. Select "Existing to Remain" for existing luminaires within the project scope that are not being altered and are remaining. Select "Existing Reinstalled" for existing luminaires which are being removed and reinstalled as part of the project scope.
[4] Compliance with mandatory shielding requirements is required for luminaires with initial lumen output >= 6,200 unless exempted by 130.2(b)/ 160.5(c)

G. SHIELDING REQUIREMENTS (BUG)

This section does not apply to this project.

Registration Number: | Generated Date/Time: | Documentation Software: EnergyPro
CA Building Energy Efficiency Standards - 2022 Nonresidential Compliance | Report Version: 2022.0.000 Schema Version: rev 20220101 | Compliance ID: EnergyPro-4443-0723-0284 Report Generated: 2023-07-24 16:39:13

STATE OF CALIFORNIA
Outdoor Lighting
CALIFORNIA ENERGY COMMISSION

CERTIFICATE OF COMPLIANCE			**NRCC-LTO-E**
Project Name:	El Dorado Park Renovation	**Report Page:**	**(Page 7 of 9)**
Project Address:	44501 5th St E	**Date Prepared:**	7/24/2023

DOCUMENTATION AUTHOR'S DECLARATION STATEMENT

I certify that this Certificate of Compliance documentation is accurate and complete.

Documentation Author Name: Alan Lopez	Documentation Author Signature: Alan Lopez
Company: IDS	Signature Date: 2023-07-24
Address: 1 Peters Canyon Rd	CEA/ HERS Certification Identification (if applicable): 6C24-CF7C-D36D-0EDC-CFB8-E73A-8B4C-7293-7AFC-43B9-C787-1BBE-0E5E-2785-F916-64D5
City/State/Zip: Irvine CA 92606	Phone: 949-387-8500

RESPONSIBLE PERSON'S DECLARATION STATEMENT

I certify the following under penalty of perjury, under the laws of the State of California:
1. The information provided on this Certificate of Compliance is true and correct.
2. I am eligible under Division 3 of the Business and Professions Code to accept responsibility for the building design or system design identified on this Certificate of Compliance (responsible designer)
3. The energy features and performance specifications, materials, components, and manufactured devices for the building design or system design identified on this Certificate of Compliance conform to the requirements of Title 24, Part 1 and Part 6 of the California Code of Regulations.
4. The building design features or system design features identified on this Certificate of Compliance are consistent with the information provided on other applicable compliance documents, worksheets, calculations, plans and specifications submitted to the enforcement agency for approval with this building permit application.
5. I will ensure that a completed signed copy of this Certificate of Compliance shall be made available with the building permit(s) issued for the building, and made available to the enforcement agency for all applicable inspections. I understand that a completed signed copy of this Certificate of Compliance is required to be included with the documentation the builder provides to the building owner at occupancy.

Responsible Designer Name: Steven Collins	Responsible Designer Signature: Steven M. Collins
Company: IDS	Date Signed: 2023-07-24
Address: 1 Peters Canyon Road	License: E22808
City/State/Zip: Irvine CA 92606	Phone: 949-387-8500

Registration Number: | Generated Date/Time: | Documentation Software: EnergyPro
CA Building Energy Efficiency Standards - 2022 Nonresidential Compliance | Report Version: 2022.0.000 Schema Version: rev 20220101 | Compliance ID: EnergyPro-4443-0723-0284 Report Generated: 2023-07-24 16:39:13

STATE OF CALIFORNIA
Outdoor Lighting
CALIFORNIA ENERGY COMMISSION

CERTIFICATE OF COMPLIANCE			**NRCC-LTO-E**
Project Name:	El Dorado Park Renovation	**Report Page:**	**(Page 8 of 9)**
Project Address:	44501 5th St E	**Date Prepared:**	7/24/2023

N. EXISTING CONDITIONS POWER ALLOWANCE (alterations only)

This section does not apply to this project.

O. DECLARATION OF REQUIRED CERTIFICATES OF INSTALLATION

Form/Title
NRCI-LTO-E - Must be submitted for all buildings

P. DECLARATION OF REQUIRED CERTIFICATES OF ACCEPTANCE

There are no NRCA forms required for this project.

Registration Number: | Generated Date/Time: | Documentation Software: EnergyPro
CA Building Energy Efficiency Standards - 2022 Nonresidential Compliance | Report Version: 2022.0.000 Schema Version: rev 20220101 | Compliance ID: EnergyPro-4443-0723-0284 Report Generated: 2023-07-24 16:39:13

STATE OF CALIFORNIA
Outdoor Lighting
CALIFORNIA ENERGY COMMISSION

CERTIFICATE OF COMPLIANCE			**NRCC-LTO-E**
Project Name:	El Dorado Park Renovation	**Report Page:**	**(Page 9 of 9)**
Project Address:	44501 5th St E	**Date Prepared:**	7/24/2023

M. LIGHTING ALLOWANCE: PER SPECIFIC AREA

This table includes areas using the wattage allowance per specific area from Table 140.7-B /Table 170.2-S. More than one specific area allowance may be taken in a single project, if applicable. However, multiple specific area allowances may not be taken for the exact same area on the site.

01	02	03	04	05	06	07	08	09	10
Area Description	Specific Area Type per Table 140.7-B	CALCULATED ALLOWANCE (Watts) Specific Area (ft^2)[1]	Allowed Density (W/ft^2)	Extra Allowance (Watts)	DESIGN WATTS Luminaire Name cr Item Tag	Watts per Luminaire	# of Luminaires	Design Watts	Additional Allowance (Watts)
Main Entrance	NonSalesCanopy	1865	0.1	255.5	F14A	10.7	14	149.8	163.8
					F15	7	2	14	
Total Design Watts for this Area:								163.8	
Enclosed Patio	NonSalesCanopy	2462	0.1	337.3	F14	10.7	6	64.2	85.0
					F15A	7	1	7	
					F10	13.8	1	13.8	
Total Design Watts for this Area:								85.0	
Patio Area	NonSalesCanopy	876	0.1	120	F14	10.7	30	321	120
					F15	7	4	28	
Total Design Watts for this Area:								349	
Total Allowance (Watts) All Areas:								368.8	

[1] FOOTNOTES: See Table 140.7-B /Table 170.2-S for rules for calculating the specific areas (ft^2 for these additional lighting allowances.
[2] For luminaires indicated in Table F as linear, wattage in column 07 is W/lf instead of Watts/luminaire. Total linear feet should be indicated in column 08 instead of number of luminaires.

Registration Number: | Generated Date/Time: | Documentation Software: EnergyPro
CA Building Energy Efficiency Standards - 2022 Nonresidential Compliance | Report Version: 2022.0.000 Schema Version: rev 20220101 | Compliance ID: EnergyPro-4443-0723-0284 Report Generated: 2023-07-24 16:39:13

APPROVAL

CITY APPROVED BY:
DIRECTOR OF PUBLIC WORKS — DATE
CITY REVIEWED BY:
SENIOR ENGINEER — DATE
SUBMITTED BY:
DATE

CLIENT
LANCASTER
Creating a better tomorrow. Together.
CITY OF LANCASTER
44933 FERN AVENUE
LANCASTER, CA 93534

PROJECT NAME
SAMARITAN'S PURSE PARK FORMERLY KNOWN AS EL DORADO PARK RENOVATION
PWCP NO. 24-008
44501 5th STREET EAST
LANCASTER, CA 93535

ENGINEER/ARCHITECT
IDS
IDS GROUP
1 PETERS CANYON ROAD, SUITE 130
IRVINE, CA 92606
TEL: 949-387-8500, FAX: 949-387-0800

STAMP
REGISTERED PROFESSIONAL ENGINEER STEVEN M. COLLINS No. E22808 Exp. 06/30/24 CIVIL STATE OF CALIFORNIA
DATE SIGNED 09-23-23

ISSUE

REV.	DESCRIPTION	DATE
	30% CD SET	12/15/23
	60% CD SET	01/19/24
	90% CD SET	02/26/24
1	CLIENT REVISION	04/26/24
2	BID SET	09/10/24
3	BULLETIN #1	10/25/24
4	BULLETIN #1 R1	2/14/25
	COMPOSITE SET	9/24/25

PROJECT IDENTIFICATION

THIS DRAWING WAS CREATED IN AUTODESK AUTOCAD V. 2021 UNLESS OTHERWISE NOTED.

THE ORIGINAL SIZE OF THIS SHEET IS 30" X 42"

THESE DRAWINGS AND SPECIFICATIONS ARE THE PROPERTY AND COPYRIGHT OF IDS GROUP AND SHALL NOT BE USED ON ANY OTHER PROJECT OR LOCATIONS EXCEPT AS DESCRIBED ON THE DRAWINGS, WITHOUT THE WRITTEN AGREEMENT WITH IDS GROUP.

IDS PROJECT NO.	22X099.01
IDS DRAWN BY	SM
IDS CHECKED BY	SM
IDS APPROVED BY	SC

SHEET TITLE
OUTDOOR TITLE 24 COMPLIANCE FORMS

SHEET NUMBER
E-08.1
SHEET NO. 18 OF 18

CUMULATIVE SHEET NO. XXX OF XXX

PROGRESS SET - NOT FOR CONSTRUCTION

IDS GROUP - FILE LOCATION: S:\PROJECTS\2022\SHARED\22X099.01 LANC - EL DORADO PARK\05 CAD\05 ELEC\2023-12-05-EXISTING CC FILES\E-08_E-08.1 SHEET 15-16 TITLE 24 PLOT DATE: 12/5/2024 7:23:49 PM USER: MICHAEL.REED

SKATE ELEMENTS TO BE PROVIDED BY
SPOHN RANCH SKATEPARKS
CONTACT VINCE ONEL
VINCE@SPOHNRANCH.COM
626-330-5803

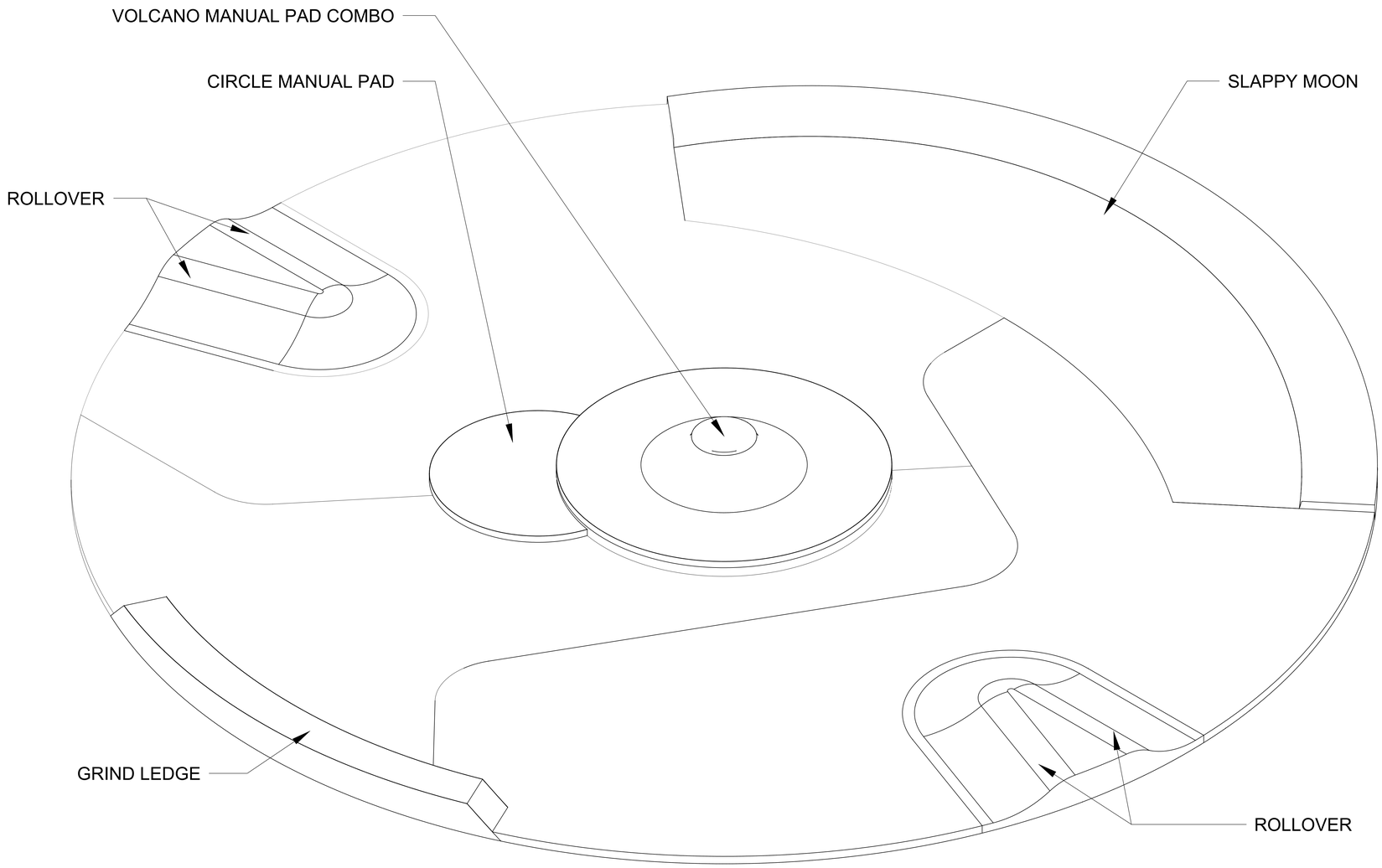

SHEET INDEX

SHEET	DESCRIPTION
SK1.0	3D PERSPECTIVE
SK2.0	SPECIFICATIONS
SK3.0	INFORMATION PLAN
SK4.0	COLOR PLAN
SK5.0	LAYOUT PLAN
SK6.0	GRADING PLAN
SK7.0	STEEL PLAN
SK8.0	SECTIONS
SK9.0	CONSTRUCTION DETAILS

APPROVAL

CITY APPROVED BY:
DIRECTOR OF PUBLIC WORKS DATE
CITY REVIEWED BY:
SENIOR ENGINEER DATE
SUBMITTED BY:
DATE

CLIENT
LANCASTER
Creating a better tomorrow. Together.
CITY OF LANCASTER
44933 FERN AVENUE
LANCASTER, CA 93534

PROJECT NAME
EL DORADO PARK RENOVATION
PWCP NO. 24-008
44501 5th STREET EAST
LANCASTER, CA 93534

ENGINEER/ARCHITECT
SPOHN RANCH SKATEPARKS
6824 S. CENTINELA AVE.
LOS ANGELES, CA 90230
P:626-330-5803 F:626-330-5503

STAMP

ISSUE

REV.	DESCRIPTION	DATE
	COMPOSITE SET	9/24/25

PROJECT IDENTIFICATION

THIS DRAWING WAS CREATED IN AUTODESK AUTOCAD V. 2021 UNLESS OTHERWISE NOTED.

THE ORIGINAL SIZE OF THIS SHEET IS 30" X 42"

THESE DRAWINGS AND SPECIFICATIONS ARE THE PROPERTY AND COPYRIGHT OF IDS GROUP AND SHALL NOT BE USED ON ANY OTHER PROJECT OR LOCATIONS EXCEPT AS DESCRIBED ON THE DRAWINGS, WITHOUT THE WRITTEN AGREEMENT WITH IDS GROUP.

SRKP PROJECT NO.	XXXX
DRAWN BY	ZM, DM
CHECKED BY	VO
APPROVED BY	DH

SHEET TITLE
3D PERSPECTIVE

SHEET NUMBER
SK1.0

SHEET NO. XXX OF XXX

CUMULATIVE SHEET NO. XXX OF XXX

PROGRESS SET - NOT FOR CONSTRUCTION

IDS GROUP - FILE LOCATION: G:\MY DRIVE\SKATEPARK PROJECTS\LANCASTER EL DORADO, CA\CAD\SHEETS\3D PERSPECTIVE PLOT DATE: 5/24/2023 9:42:19 AM USER: ZACHM

GENERAL NOTES

DESIGN CRITERIA

1. THESE GENERAL NOTES APPLY UNLESS NOTED OTHERWISE ON CONSTRUCTION DRAWINGS.
2. COMPLY WITH CURRENT LOCAL BUILDING CODE EXCEPT AS NOTED HEREIN.
3. TESTING SERVICES: OWNER TO BEAR ALL ASSOCIATED COSTS FOR TESTING SERVICES. COORDINATE THE FOLLOWING TESTING WITH THE OWNER SELECTED TESTING AGENCY (IF REQUIRED BY THE PROJECT SPECIFICATIONS):
   A. MATERIAL EVALUATIONS TESTS FOR CONCRETE MIX, AGGREGATE BASE, SUBGRADE, AND STRUCTURAL FILL.
   B. INSPECTION OF STRUCTURAL FILL PLACEMENT AND COMPACTION.
   C. INSPECTION OF FINAL SUBGRADE.
   D. BASE MATERIAL COMPACTION TEST FOR EVERY 2500 S.F. OF CONCRETE FLATWORK IN SKATEPARK AREA TO ENSURE 95% COMPACTION IN ACCORDANCE WITH CIVIL ENGINEERING SPECIFICATIONS AND TESTING AGENCY RECOMMENDATIONS.

SHOP DRAWINGS

1. THE SHOP DRAWING REVIEW IS INTENDED TO HELP THE SKATEPARK DESIGNER VERIFY THEIR DESIGN CONCEPT. THIS REVIEW IS ONLY FOR GENERAL CONFORMANCE WITH THE DESIGN CONCEPT AND DOES NOT RELIEVE THE CONTRACTOR FROM COMPLIANCE WITH DESIGN DRAWINGS & SPECIFICATIONS, WHICH HAVE A PRIORITY OVER SHOP DRAWINGS. CONTRACTOR IS RESPONSIBLE FOR CONFIRMED & CORRELATED DIMENSIONS, FABRICATION PROCESSES, MEANS, METHODS, TECHNIQUES, SAFETY, AND COORDINATION OF THE WORK WITH OTHER TRADES. IT IS THE CONTRACTOR'S RESPONSIBILITY TO CHECK THE ACCURACY OF HIS OWN SHOP DRAWINGS AND THOSE OF HIS SUBCONTRACTORS, PRIOR TO SUBMITTAL.
2. THE SHOP DRAWINGS WILL BE RETURNED FOR RESUBMITTAL IF A CURSORY REVIEW SHOWS MAJOR ERRORS WHICH SHOULD HAVE BEEN FOUND BY THE CONTRACTOR'S CHECKING. ALL SHOP DRAWINGS SHALL INCLUDE PLAN LAYOUTS SHOWING LOCATIONS OF ITEMS DETAILED ON THE SHOP DRAWINGS. ANY CHANGES, SUBSTITUTIONS, OR DEVIATIONS FROM THE CONTRACT DOCUMENTS SHALL BE CLOUDED ON SHOP DRAWINGS. ANY OF THE CHANGES WHICH ARE NOT CLOUDED OR FLAGGED BY SUBMITTING PARTIES, SHALL NOT BE CONSIDERED REVIEWED AFTER SKATEPARK DESIGNER'S REVIEW UNLESS NOTED ACCORDINGLY.
3. ANY RESUBMITTAL OF A DETAIL SHEET WITH CHANGED INFORMATION SHALL BE ACCOMPANIED BY LOCATION PLAN IDENTIFYING THE MEMBERS INVOLVED, AND CLOUDING AROUND CHANGED INFORMATION.
4. ANY ENGINEERING SUBMITTED FOR REVIEW SHALL BE APPROPRIATELY SEALED. FULL RESPONSIBILITY OF SUCH ENGINEERING RESTS WITH THE PERSON SEALING THE DESIGN.

EARTHWORK

1. ESTABLISH AND MAINTAIN REQUIRED LINES AND GRADE ELEVATIONS.
2. REMOVE UPPER FOUR TO SIX INCHES OR MORE OF TOPSOILS CONTAINING SURFICIAL VEGETATION, GRASS, ROOTS, AND ORGANIC MATERIAL FROM WITHIN AND TO A POINT AT LEAST FIVE FEET BEYOND THE BUILDING LINES/SKATEPARK LIMITS. THESE SOILS ARE GENERALLY NOT CONSIDERED SUITABLE FOR RE-USE AS STRUCTURAL FILL AND SHOULD BE STOCKPILED IN DESIGNATED AREAS BEYOND THE CONSTRUCTION LIMITS, OR REMOVED FROM THE SITE. COORDINATE STOCKPILE LOCATION WITH OWNER. IF REMOVED FROM SITE, DISPOSE OF IN A LEGAL MANNER.
3. COMPACT THE EXPOSED SUBGRADE ACROSS THE SITE TO ESTABLISH A FIRM AND UNYIELDING SURFACE. UNDER SUPERVISION OF CITY PROVIDED GEOTECHNICAL ENGINEER, PROOF-ROLL EXPOSED SUBGRADES WITH CONSTRUCTION EQUIPMENT TO ASSIST IN THE EVALUATION OF THE SUBGRADES ACROSS THE SITE. IF UNSTABLE AREAS ARE DETECTED, AN INITIAL ATTEMPT SHOULD BE MADE TO AERATE (12 INCHES MIN.) AND DENSIFY THE SUBGRADE BY RECOMPACTION WHERE NATURAL MOISTURE CONTENTS ARE AT APPROPRIATE LEVELS. IF THIS PROCEEDURE IS INEFFECTIVE, THE DISTURBED SOILS SHOULD BE UNDERCUT AND REPLACED WITH CLEAN FILL AND/OR STABILIZING MATERIALS. COMPACT TO AT LEAST 90% OF THE MAXIMUM DRY DENSITY IN ACCORDANCE WITH ASTM D698 STANDARD PROCTOR METHOD. FILL AND CONSOLIDATE DEPRESSED AREAS. A FIRM, NON-YIELDING SUBGRADE SHOULD BE ESTABLISHED PRIOR TO PROCEEDING WITH FILL PLACEMENT.
4. SOIL COMPACTION SHALL BE ACHIEVED BY MEANS OF PNEUMATIC TIRE ROLLERS, HOE PACKS, RIDE-ON DRUM ROLLER OR OTHER MECHANICAL TAMPERS (PLATE, RAMMER, OR WALK BEHIND ROLLER).
5. PROVIDE STRUCTURAL FILL AS REQUIRED TO MEET PROPOSED SUBGRADE ELEVATIONS IN ACCORDANCE WITH GRADING PLAN.
6. BUILD UP SUBGRADE USING STOCKPILED MATERIAL AND/OR APPROVED MATERIAL WITH LOW PLASTICITY. THE FILL SHOULD BE PLACED IN LIFTS THIN ENOUGH TO ATTAIN THE SPECIFIED COMPACTION LEVEL THROUGHOUT THE ENTIRE LIFT THICKNESS. PRIOR TO COMPACTION, MOISTURE CONDITION AS NEEDED. COMPACT EACH LIFT TO AT LEAST 90 PERCENT OF ASTM D698.
7. THE EARTHWORK SHALL BE DONE UNDER SUPERVISION OF A SOILS ENGINEER RETAINED BY THE OWNER (IF REQUIRED BY THE PROJECT), WHO SHALL VERIFY ABOVE SPECIFICATIONS FOR THE SUPPORT OF SLAB ON GRADE AND FOR THE CONTROL OF SOIL SWELLING. FIELD DENSITY TESTS TO DETERMINE THE LEVEL OF COMPACTION BEING ACHIEVED IN THE FILL SHALL BE PERFORMED ON EACH LIFT AT THE BEGINNING OF FILL PLACEMENT AND AT A FREQUENCY MUTUALLY AGREED UPON BY THE PROJECT TEAM FOR THE REMAINDER OF THE PROJECT.
8. EXCAVATION AND COMPACTION OF FILL SHALL EXTEND TO MINIMUM 2' FEET BEYOND SKATE PARK FOOTPRINT.
10. PROCEED WITH SUB-BASE AS REQUIRED ONLY AFTER NONCONFORMING CONDITIONS HAVE BEEN CORRECTED AND SUBGRADE HAS BEEN INSPECTED. A FIRM, NON-YIELDING SUBGRADE SHOULD BE ESTABLISHED PRIOR TO BASE COURSE PLACEMENT.
11. PROVIDE THE SPECIFIED DEPTH OF COMPACTED AGGREGATE BASE MATERIAL IF REQUIRED. COMPACT AGGREGATE BASE TO 90% OF THE MAXIMUM DRY DENSITY IN ACCORDANCE WITH ASTM D698 STANDARD PROCTOR METHOD IF REQUIRED.
12. PROCEED WITH CONCRETE ONLY AFTER NONCONFORMING CONDITIONS HAVE BEEN CORRECTED, SUBGRADE HAS BEEN INSPECTED, AND FORMWORK AND FIELD MOCK-UPS HAVE BEEN REVIEWED.
13. A SOILS REPORT DOES EXIST FOR THIS PROJECT. OWNER SHALL RETAIN A SOILS ENGINEER IF SO REQUIRED BY THE PROJECT, TO VERIFY EXCAVATIONS FOR ASSUMED ALLOWABLE SOIL BEARING, LOW SETTLEMENT AND SWELL POTENTIAL, AND TO MAKE ANY ADDITIONAL RECOMMENDATIONS.

FORMS

1. FORM MATERIALS: PLYWOOD, METAL, METAL-FRAMED PLYWOOD, OR OTHER APPROVED PANEL-TYPE MATERIALS FREE FROM DEFECTS AND DISTORTION, AND TO PROVIDE FULL-DEPTH, CONTINUOUS, STRAIGHT, SMOOTH EXPOSED SURFACES.
2. USE FLEXIBLE OR CURVED FORMS AS REQUIRED TO PROVIDE VERTICAL AND HORIZONTAL RADII AS INDICATED IN THE DRAWINGS.
3. PROVIDE 2" NOMINAL THICKNESS, SURFACED PLANK WOOD FORMS FOR STRAIGHT SECTIONS. USE FLEXIBLE METAL, 1" LUMBER, OR PLYWOOD FORMS FOR RADIUS BENDS. DO NOT OVERLAP FORMS, CREATING AN OFFSET FINISHED EDGE.
4. FORM-RELEASE AGENT: COMMERCIALLY FORMULATED FORM-RELEASE AGENT THAT WILL NOT BOND WITH, STAIN, OR ADVERSELY AFFECT CONCRETE SURFACES AND WILL NOT IMPAIR SUBSEQUENT TREATMENTS OF CONCRETE SURFACES.
5. EDGE FORMS AND SCREED CONSTRUCTION
   A. SET, BRACE, AND SECURE EDGE FORMS, BULKHEADS, AND INTERMEDIATE SCREED GUIDES FOR PAVEMENT TO REQUIRED LINES, GRADES, AND ELEVATIONS. INSTALL FORMS TO ALLOW CONTINUOUS PROGRESS OF WORK.
   B. CLEAN FORMS AFTER EACH USE AND COAT WITH FORM RELEASE AGENT TO ENSURE SEPARATION FROM CONCRETE WITHOUT DAMAGE.

REINFORCING

1. ALL REINFORCING STEEL SHALL CONFORM TO ASTM A-615 GRADE 60. FOR REINFORCING THAT IS TO BE WELDED, CONFORM TO ASTM A706 GRADE 60. USE ASTM A-108 GRADE 60 FOR ALL WELDED ANCHORS.
2. JOINT DOWEL BARS: PLAIN STEEL DOWELS, ASTM A 615/A 615M, GRADE 60. CUT BARS TRUE TO LENGTH WITH ENDS SQUARE AND FREE OF BURRS.
3. SLIP DOWEL SLEEVES ARE ACCEPTABLE, SUCH AS SPEED DOWELS BY GREENSTREAK, INC., OR APPROVED EQUAL.
4. BAR SUPPORTS: BOLSTERS, CHAIRS, SPACERS AND OTHER DEVICES FOR SPACING, SUPPORTING, AND FASTENING REINFORCEMENTS BARS, AND DOWELS IN PLACE. MANUFACTURE BAR SUPPORTS ACCORDING TO CRSI'S "MANUAL OF STANDARD PRACTICE" FROM STEEL WIRE, PLASTIC, OR PRECAST CONCRETE OR FIBER-REINFORCED CONCRETE OF GREATER COMPRESSIVE STRENGTH THAN CONCRETE.
5. ALL REINFORCING BARS TO BE DEFORMED. CLEAR CONCRETE COVERAGES TO ANY REINFORCING INCLUDING TIES ARE AS FOLLOWS:
   A. 2" FORMED CONCRETE EXPOSED TO EARTH OR WEATHER.
   B. 1" SLABS AND JOISTS NOT EXPOSED TO WEATHER.
   C. 1-1/2" ALL OTHER.
6. SMALLER CLEARANCES PERMISSIBLE FOR PRECAST OR PRESTRESSED.
7. TENSION LAP SPLICES IN CONCRETE: UNLESS NOTED OTHERWISE, PROVIDE THE FOLLOWING:
   A. #3, 9"; #4, 12". 30X DIAMETER FOR TOP BARS
8. MINIMUM CLEAR COVER FOR SPLICED REINFORCING IS GREATER THAN ONE BAR DIAMETER, AND MINIMUM CLEAR SPACING IS GREATER THAN TWO BAR DIAMETERS. SPLICE BOTTOM BAR OVER SUPPORTS AND TOP BAR AT MIDSPAN ONLY. WHERE BARS ARE SHOWN SPLICED, THEY MAY RUN CONTINUOUS AT CONTRACTOR'S OPTION.

CONCRETE

1. PROVIDE MIX DESIGNS THAT WILL MEET THE MINIMUM REQUIREMENTS LISTED HEREIN:
   A. MINIMUM 28-DAY STRENGTH: 4000 PSI
   B. TYPE I/II CEMENT
   C. SMALL TO MEDIUM AGGREGATE (1" MAX.)
   D. WATER/CEMENT RATIO OF .45 OR LESS
   E. MIX DESIGNS CONTAINING FLY ASH: THE AMOUNT OF FLY ASH USED SHALL NOT EXCEED 20% BY WEIGHT OF THE COMBINED WEIGHT OF FLY ASH PLUS CEMENT.
   F. AIR ENTRAINMENT NOT TO EXCEED 3%.
2. DO NOT INSTALL CONCRETE WORK OVER SATURATED, MUDDY, OR FROZEN SUBGRADE.
3. PROTECT ADJACENT WORK AND PROVIDE TEMPORARY BARRICADES AS REQUIRED FOR PROTECTION OF PROJECT WORK AND PUBLIC SAFETY.
4. MECHANICALLY VIBRATE ALL CONCRETE FLATWORK WHEN PLACED, EXCEPT THAT SLABS ON GRADE AND SLABS ON DECK NEED TO BE VIBRATED ONLY AROUND EMBEDDED ITEMS.
5. CONCRETE CYLINDERS SHALL BE TAKEN AND TESTED PER THE ACI CODE, WHEN REQUIRED BY THE PROJECT. FREQUENCY= 1 SET OF CYLINDERS PER 50 CY'S PLACED. OWNER TO BEAR ALL COSTS.
6. ALL REINFORCING, INCLUDING DOWELS AND ANCHOR BOLTS, SHALL BE SECURELY TIED IN LOCATION BEFORE PLACING CONCRETE OR GROUT. DOWELS WILL NOT BE ALLOWED TO BE "STABBED" IN.
7. IN AN EFFORT TO CONTROL SHRINKAGE AND QUALITY, FLATWORK/FLOORS SHOULD BE PLACED IN SECTIONS OF 25 CY'S OR LESS.
8. CONDUITS, PIPES, AND SLEEVES EMBEDDED IN CONCRETE SHALL CONFORM TO THE REQUIREMENTS OF ACI 6.3.

CONCRETE PLACEMENT

1. CONSOLIDATE CONCRETE BY MECHANICAL VIBRATING EQUIPMENT SUPPLEMENTED BY HAND-SPADING, RODDING OR TAMPING. USE EQUIPMENT AND PROCEDURES TO CONSOLIDATE CONCRETE ACCORDING TO RECOMMENDATIONS IN ACI 309R.
   A. CONSOLIDATE CONCRETE ALONG FACE OF FORMS AND ADJACENT TO TRANSVERSE JOINTS WITH AN INTERNAL VIBRATOR. KEEP VIBRATOR AWAY FROM JOINT ASSEMBLIES, REINFORCEMENT, OR SIDE FORMS. USE ONLY SQUARE-FACED SHOVELS FOR HAND-SPREADING AND CONSOLIDATION. CONSOLIDATE WITH CARE TO PREVENT DISLOCATING REINFORCEMENT, DOWELS, AND JOINT DEVICES.
2. COLD WEATHER PLACEMENT: COMPLY WITH ACI 306.1 AND AS FOLLOWS. PROTECT CONCRETE WORK FROM PHYSICAL DAMAGE OR REDUCED STRENGTH THAT COULD BE CAUSED BY FROST, FREEZING ACTIONS, OR LOW TEMPERATURES.
   A. WHEN AIR TEMPERATURE HAS FALLEN TO OR IS EXPECTED TO FALL BELOW 40 DEG F, UNIFORMLY HEAT WATER AND AGGREGATES BEFORE MIXING TO OBTAIN A CONCRETE MIXTURE TEMPERATURE OF NOT LESS THAN 50 DEG F AT POINT OF PLACEMENT.
   B. DO NOT USE FROZEN MATERIALS OR MATERIALS CONTAINING ICE OR SNOW.
   C. DO NOT USE CALCIUM CHLORIDE, SALT, OR OTHER MATERIALS CONTAINING ANTIFREEZE AGENTS OR CHEMICAL ACCELERATORS, UNLESS OTHERWISE SPECIFIED AND APPROVED IN MIX DESIGNS.
3. HOT-WEATHER PLACEMENT: PLACE CONCRETE ACCORDING TO RECOMMENDATION IN ACI 305R AND AS FOLLOWS WHEN HOT-WEATHER CONDITIONS EXIST:
   A. COOL INGREDIENTS BEFORE MIXING TO MAINTAIN CONCRETE TEMPERATURE AT TIME OF PLACEMENT BELOW 100 DEG FAHRENHEIT. CHILLED MIXING WATER OR CHOPPED ICE MAY BE USED TO CONTROL TEMPERATURE, PROVIDED WATER EQUIVALENT OF ICE IS CALCULATED TO TOTAL AMOUNT OF MIXING WATER. USING LIQUID NITROGEN TO COOL CONCRETE IS CONTRACTORS OPTION.
   B. FOG-SPRAY FORMS, REINFORCEMENT STEEL, AND SUBGRADE JUST BEFORE PLACING CONCRETE. KEEP SUBGRADE MOISTURE UNIFORM WITHOUT STANDING WATER, SOFT SPOTS, OR DRY AREAS.
4. **FINISH: ALL EXPOSED CONCRETE SURFACES ARE TO BE HARD STEEL TROWEL FINISH UNLESS OTHERWISE NOTED. TROWEL UNTIL ALL VISIBLE PORES ARE CLOSED. CEASE TROWELING BEFORE SURFACE BECOMES GLOSSY. DO NOT BROOM FINISH AND DO NOT TROWEL BURN SURFACE.**
   a. ALL EDGE TOOLING SHOULD BE 1/8 INCH RADIUS UNLESS OTHERWISE SPECIFIED.
5. COLOR: ALL CONCRETE SURFACES ARE TO BE NATURAL GRAY COLOR UNLESS OTHERWISE NOTED. MINOR VARIATIONS IN APPEARANCE OF COLORED CONCRETE, WHICH ARE SIMILAR TO NATURAL VARIATIONS IN COLOR AND APPEARANCE OF UNCOLORED CONCRETE, ARE ACCEPTABLE. DO NOT BROOM FINISH AND DO NOT TROWEL BURN SURFACE.

CONCRETE PROTECTION AND CURING

1. GENERAL: PROTECT FRESHLY PLACED CONCRETE FROM PREMATURE DRYING AND EXCESSIVE COLD OR HOT TEMPERATURES. COMPLY WITH ACI 306.1 FOR COLD-WEATHER PROTECTION AND FOLLOW RECOMMENDATIONS IN ACI 305R FOR HOT-WEATHER PROTECTION DURING CURING. KEEP MOIST FOR NECESSARY AMOUNT OF TIME TO REACH CONCRETE STRENGTH AND INHIBIT MOISTURE LOSS AFTER PLACING.
2. EVAPORATION RETARDANT: WATERBORNE, MONOMOLECULAR FILM FORMING, MANUFACTURED FOR APPLICATION TO FRESH CONCRETE, SUCH AS EUCOBAR EVAPORATION RETARDANT BY THE EUCLID CHEMICAL COMPANY. APPLY EVAPORATION RETARDANT TO CONCRETE SURFACES IF HOT, DRY, OR WINDY CONDITIONS CAUSE MOISTURE LOSS BEFORE AND DURING FINISHING OPERATIONS. APPLY TO EXPOSED SURFACE OF CONCRETE ACCORDING TO MANUFACTURERS WRITTEN INSTRUCTIONS AS NECESSARY.
3. BEGIN CURING AFTER FINISHING CONCRETE, BUT NOT BEFORE FREE WATER HAS DISAPPEARED FROM CONCRETE SURFACE.
4. CURING METHODS: CURE CONCRETE BY CURING COMPOUND, MOISTURE CURING, MOISTURE-RETAINING-COVER CURING, OR A COMBINATION OF THESE AS FOLLOWS:
   A. CURING COMPOUND: MEET REQUIREMENTS OF MANUFACTURER'S CURRENT PRINTED APPLICATION INSTRUCTIONS AND COVERAGE RATE CHART. FOR HORIZONTAL APPLICATIONS, IMMEDIATELY APPLY AFTER ALL SURFACE WATER HAS DISAPPEARED AND THE CONCRETE SURFACE IS HARD ENOUGH TO WALK ON. FOR VERTICAL APPLICATIONS, APPLY IMMEDIATELY AFTER REMOVING THE CONCRETE FORMS. APPLY IN A UNIFORM AND CONTINUOUS MANNER. AVOID OVER-APPLICATION OR PUDDLING OF CURING COMPOUND. PROTECT SURFACE FROM WATER, ADJACENT SHOTCRETE WORK, AND DEBRIS.
   B. MOISTURE CURING: KEEP SURFACES CONTINUOUSLY MOIST FOR NOT LESS THAN SEVEN DAYS WITH THE FOLLOWING MATERIALS:
      - WATER.
      - CONTINUOUS WATER-FOG SPRAY.
      - ABSORPTIVE COVER, WATER SATURATED, AND KEPT CONTINUOUSLY WET. COVER CONCRETE SURFACES AND EDGES, OVERLAP SEAMS MIN. 6" BETWEEN ADJACENT ABSORPTIVE COVERS.
   C. MOISTURE-RETAINING-COVER CURING: COVER CONCRETE SURFACES WITH MOISTURE-RETAINING COVER FOR CURING CONCRETE, PLACED IN WIDEST PRACTICABLE WIDTH, WITH SIDES AND ENDS LAPPED AT LEAST 6 INCHES.

CURING MATERIALS

1. ABSORPTIVE COVER: AASHTO M 182, CLASS 2, BURLAP CLOTH MADE FROM JUTE OR KENAF, WEIGHING APPROXIMATELY 9OZ./SQ. YD. DRY.
2. MOISTURE-RETAINING COVER: ASTM C 171, POLYETHYLENE FILM OR WHITE BURLAP-POLYETHYLENE SHEET (BUR LENE).
3. WATER: POTABLE.
4. CURING COMPOUND: ASTM C-309, CLEAR, WATER-BASED, NO VOLATILE, NON-STAINING, MEMBRANE-FORMING, COMPATIBLE WITH SUBSEQUENT CONCRETE TREATMENTS. ACCEPTABLE PRODUCT: W.R. MEADOWS 1100-CLEAR, OR APPROVED EQUAL.

JOINT MATERIALS

1 EXPANSION AND ISOLATION JOINT FILLER STRIPS: EXPANSION JOINT MATERIALS SHALL BE FLEXIBLE POLYETHYLENE CLOSED CELL FOAM OR SIMILAR AND SUPPLIED BY CONCRETE CONTRACTOR. DECK-O-FOAM OR EQUIVALENT.

2 EXPANSION JOINT SEALANT: SIKAFLEX - 1A NS TG POLYURETHANE ELASTOMERIC SEALANT, OR APPROVED EQUAL. COLOR OF CAULK SHOULD RESEMBLE NATURAL COLOR OF CONCRETE (ALUMINUM GRAY OR LIMESTONE).

3 SAW CUT JOINT SEALANT: SIKAFLEX-1C SL HIGH PERFORMANCE, SELF-LEVELING, 1-PART POLYURETHANE SEALANT, OR APPROVED EQUAL. COLOR OF CAULK SHOULD RESEMBLE NATURAL COLOR OF CONCRETE (ALUMINUM GRAY OR LIMESTONE)

JOINTS

1. GENERAL: CONSTRUCT CONSTRUCTION, ISOLATION, AND CONTRACTION JOINTS AND TOOL EDGINGS TRUE TO LINE WITH FACES PERPENDICULAR TO SURFACE PLANE OF CONCRETE. CONSTRUCT TRANSVERSE JOINTS AT RIGHT ANGLES TO CENTERLINE, UNLESS OTHERWISE INDICATED.
2. EXPANSION JOINTS: FORM EXPANSION JOINTS OF SPECIFIED JOINT-FILLER STRIPS WHERE INDICATED
   A. LOCATE EXPANSION JOINTS AS INDICATED ON DRAWINGS.
   B. EXTEND JOINT FILLERS FULL WIDTH AND DEPTH OF JOINT.
3. INSTALL DOWEL BARS AND SUPPORT ASSEMBLIES AT JOINTS WHERE INDICATED. LUBRICATE OR ASPHALT-COAT ONE-HALF DOWEL LENGTH TO PREVENT CONCRETE BONDING TO ONE SIDE OF JOINT.
4. CONTROL JOINTS: FORM WEAKENED-PLANE JOINTS, SECTIONING CONCRETE INTO AREAS AS INDICATED. CONSTRUCT CONTROL JOINTS FOR A DEPTH AS INDICATED IN THE DRAWINGS (GENERALLY 1/3 OF THE PAVEMENT THICKNESS), AS FOLLOWS:
   A. SAWED JOINTS: FORM CONTROL JOINTS WITH POWER SAWS EQUIPPED WITH SHATTERPROOF ABRASIVE OR DIAMOND-RIMMED BLADES. CUT 1/8 INCH WIDE JOINTS INTO CONCRETE WHEN CUTTING ACTION WILL NOT TEAR, ABRADE, OR OTHERWISE DAMAGE SURFACE AN BEFORE DEVELOPING RANDOM CONTRACTION CRACKS. EARLY SAW CUTS ARE APPROXIMATELY 1 INCH DEEP, REGARDLESS OF PAVEMENT THICKNESS. REFER TO CONTROL JOINT GUIDE DRAWING OF PLAN SET IF APPLICABLE.
   B. IF SKATEPARK PROJECT DESIGN UTILIZES POURED STEPS, CONTROL JOINTS MUST BE CUT 3 - 4 FEET FROM THE EDGE OF THE TOP STEP.
5. POST CURE DETAIL WORK (AS NEEDED): GRIND SMOOTH ANY INCONSISTENCIES IN THE FINISH OR HIGH SPOTS BETWEEN POURS.

METALS

1. FURNISH MATERIALS AND PERFORM LABOR REQUIRED TO EXECUTE THIS WORK AS INDICATED ON THE DRAWINGS, AS SPECIFIED, AND AS NECESSARY TO COMPLETE THE CONTRACT, INCLUDING, BUT NOT LIMITED TO BOWL STEEL COPING, LEDGE STEEL EDGING, HANDRAILS, AND GRIND RAILS.
2. USING SKILLED WORKERS, FORM AND FABRICATE ITEMS OF WORK AS INDICATED AND AS REQUIRED TO MEET INSTALLATION CONDITIONS. MAKE PROVISIONS TO CONNECT WITH OR RECEIVE THE WORK OF OTHER TRADES.
3. USE MATERIALS OF SIZE AND THICKNESS SHOWN OR, IF NOT SHOWN, OF REQUIRED SIZE AND THICKNESS TO PRODUCE STRENGTH AND DURABILITY IN THE FINISHED PRODUCT.
4. UNLESS OTHERWISE INDICATED, WELD OR BOLT CONNECTIONS BETWEEN MEMBERS. WHERE POSSIBLE, CONCEAL CONNECTIONS ON THE FINISHED WORK. FIT OR MITER EXPOSED JOINTS TO HAIRLINE TOLERANCE OR USE WELDED JOINTS. ON FINISHED SURFACES, GRIND ALL WELDS SMOOTH AND FLUSH WITH BASE METAL.
5. WELD CONNECTIONS WHICH ARE NOT TO BE LEFT AS EXPOSED JOINTS, BUT CANNOT BE SHOP WELDED BECAUSE OF SHIPPING SIZE LIMITATIONS.
6. CAP ALL EXPOSED TUBE OR PIPE ENDS. USE SIZE AND THICKNESS OF MATERIAL SHOWN. PROPERLY FIT AND WELD CAP AT JOINT, GRIND WELD SMOOTH AND FLUSH WITH BASE METAL.
7. BEND PIPE OR TUBING WITHOUT COLLAPSING OR DEFORMING THE WALLS, SO AS TO PRODUCE A SMOOTH UNIFORM CURVED SECTION AND MAINTAIN UNIFORM SECTIONAL SHAPE.
8. WHERE ITEMS ARE TO BE IMBEDDED IN CONCRETE OR MASONRY, PROVIDE WELDED-ON ANCHORS OR LUGS AS INDICATED OR REQUIRED.
9. PROVIDE TEMPORARY BRACING OR ANCHORS IN FORMWORK FOR ITEMS WHICH ARE TO BE BUILT INTO CONCRETE OR SIMILAR CONSTRUCTION.
10. FASTENING TO IN-PLACE CONSTRUCTION: PROVIDE ANCHORING DEVICES AND FASTENERS WHERE NECESSARY FOR SECURING MISCELLANEOUS METAL FABRICATIONS TO IN-PLACE CONSTRUCTION INCLUDING THREADED FASTENERS FOR CONCRETE INSERTS, OR OTHER CONNECTORS AS REQUIRED.
11. GALVANIZING REPAIR--USE A HIGH ZINC DUST CONTENT PAINT FOR RE-GALVANIZING WELDS IN GALVANIZED STEEL. HOT GALVANIZED SOLDER IS ALSO ACCEPTABLE. USE RUST-OLEUM COLD GALVANIZING COMPOUND SPRAY, OR SIMILAR.
12. ALL WELDING SHALL CONFORM TO REQUIREMENTS OF AWS STANDARDS. ALL WELDING SHALL BE SHIELDED METAL ARC WELDING. WELDS IN FINISH WORK SHALL BE FILLED OUT FLUSH, GROUND AND DISTRESSED.
13. ASTM A-36 FOR C, MC, ANGLES, AND PLATES.
14. ASTM A-53 GRADE B OR A-500 GRADE B OR A-501 GRADE B FOR STEEL PIPES.
15. ASTM A-123 STANDARD SPECIFICATION FOR ZINC (HOT-DIP GALVANIZED) COATINGS ON IRON AND STEEL PRODUCTS
16. ASTM A-780 STANDARD PRACTICE FOR REPAIR OF DAMAGED AND UNCOATED AREAS OF HOT-DIP GALVANIZED COATINGS.

SUPPLEMENTARY NOTES

1. THESE CONTRACT DOCUMENTS AND SPECIFICATIONS REPRESENT THE FINISHED STRUCTURE. THEY DO NOT INDICATE THE METHOD OF CONSTRUCTION. THE CONTRACTOR SHALL PROVIDE ALL MEASURES NECESSARY TO PROTECT THE IMPROVEMENTS, WORKERS, AND OTHER PERSONS DURING CONSTRUCTION. SUCH MEASURES SHALL INCLUDE, BUT NOT BE LIMITED TO, MEANS AND METHODS, BRACING, SHORING, FORMS, SCAFFOLDING, GUYING OR OTHER MEANS TO AVOID EXCESSIVE STRESSES AND TO HOLD ELEMENTS IN PLACE DURING CONSTRUCTION. OBSERVATION VISITS TO THE SITE BY THE ENGINEER SHALL NOT INCLUDE INSPECTION OF THE ABOVE ITEMS.
2. OPTIONS AND SUBSTITUTIONS (APPROVED BY OWNER/SKATEPARK DESIGNER/ARCHITECT) ARE FOR CONTRACTOR'S CONVENIENCE. CONTRACTOR SHALL BE RESPONSIBLE FOR SUBMITTING ALL CHANGES AND ADDITIONAL COSTS NECESSARY AND SHALL COORDINATE ALL DETAILS WITH SKATEPARK DESIGNER THROUGH PRIME CONTRACTOR.
3. ANY ENGINEERING DESIGN PROVIDED BY CONTRACTOR OR OTHERS AND SUBMITTED FOR REVIEW SHALL BE WET SIGNED AND STAMPED BY AN INSURED REGISTERED STRUCTURAL OR CIVIL ENGINEER LICENSED IN THE STATE OF WHICH THE PROJECT IS LOCATED, IF REQUIRED BY CITY OR COUNTY.
4. UNLESS NOTED OTHERWISE, DETAILS ON CONSTRUCTION DRAWINGS ARE TYPICAL AS INDICATED BY CUTS, REFERENCES, OR TITLES. ALL DETAILS SHOWN SHALL BE IMPORTED INTO THE PROJECT AT ALL APPROPRIATE LOCATIONS, WHETHER SPECIFICALLY INDICATED OR NOT. TYPICAL DETAILS MAY OR MAY NOT BE REFERENCED ON THE DOCUMENTS, BUT SHALL APPLY AT ALL LOCATIONS, UNLESS NOTED OTHERWISE. WHERE NO DETAIL CUTS ARE SHOWN, CONSTRUCTION SHALL CONFORM TO SIMILAR WORK SHOWN ELSEWHERE ON THE PROJECT. FOR BIDDING PURPOSES, WHERE ANY SHOWN MEMBER OR STRUCTURAL ELEMENT IS NOT SIZED ON THE DOCUMENTS, THE LARGEST SIMILAR MEMBER USED IN THE PROJECT SHALL BE UTILIZED.
5. ALL DIMENSIONS AND ELEVATIONS SHOWN ON CONSTRUCTION DRAWINGS SHALL BE VERIFIED WITH ARCHITECTURAL DRAWINGS (IF REQUIRED BY THE PROJECT). RESOLVE ALL DISCREPANCIES WITH SKATEPARK DESIGNER AND PRIME CONTRACTOR PRIOR TO START OF CONSTRUCTION. DO NOT SCALE DRAWINGS.
6. CONTRACTOR SHALL ESTABLISH AND VERIFY IN FIELD ALL EXISTING CONDITIONS AFFECTING NEW CONSTRUCTION. CONTACT SKATEPARK DESIGNER AND PRIME CONTRACTOR IMMEDIATELY IF EXISTING CONDITIONS ARE NOT AS DEPICTED IN DRAWINGS.
7. ***SKATE FEATURE DESIGN AND LAYOUT ARE THE RESPONSIBILITY OF THE SKATEPARK DESIGNER.**

PAVEMENT TOLERANCES

4. CONTRACTOR MUST ACHIEVE POSITIVE DRAINAGE FOR ALL SURFACES WITHIN THE SKATEPARK AREA WHENEVER POSSIBLE.

REPAIRS AND PROTECTION

1. REMOVE AND REPLACE CONCRETE PAVEMENT THAT IS BROKEN, DAMAGED, OR DEFECTIVE, OR DOES NOT MEET REQUIREMENTS IN THIS SECTION. THE CONTRACTOR SHALL FIX ALL CRACKS AND DISPLACEMENTS LARGER THAN 3/16" UP TO THE PROJECT COMPLETION.
2. PROTECT CONCRETE FROM DAMAGE. EXCLUDE TRAFFIC FROM PAVEMENT FOR AT LEAST 14 DAYS AFTER PLACEMENT. WHEN CONSTRUCTION TRAFFIC IS PERMITTED, MAINTAIN PAVEMENT AS CLEAN AS POSSIBLE BY REMOVING SURFACE STAINS AND SPILLAGE OF MATERIALS AS THEY OCCUR.
3. MAINTAIN CONCRETE PAVEMENT OF FREE STAINS, DISCOLORATION, DIRT, AND OTHER FOREIGN MATERIAL.

SHOTCRETE SPECIFICATIONS

PART 1- GENERAL

1.1 SUMMARY

A. SPECIALTY CONSTRUCTION:
   A.A. DESCRIPTION: SHOTCRETE APPLICATION, CUTTING, SCULPTING AND FINISH WORK HAS BEEN DEEMED AS SPECIALTY CONSTRUCTION WORK WITHIN THE CONSTRUCTION DOCUMENTS. ALL WORK RELATED TO THE SPECIALTY CONSTRUCTION SHALL BE COORDINATED BY THE PROJECT ENGINEER, AND THE PRE-QUALIFIED SPECIALTY CONTRACTOR, PRIOR TO THE START OF CONSTRUCTION.

1.2 QUALITY ASSURANCE

A. STANDARDS: COMPLY WITH THE REQUIREMENTS OF THE CURRENT EDITION OF THE FOLLOWING CODES AND STANDARDS, EXCEPT AS HEREIN MODIFIED:
   A.A. AMERICAN CONCRETE INSTITUTE (ACI): 506, CHAPTER 13, WET METHOD. CHAPTER 5, SHOTCRETE CREW
   A.B. ASTM: "AMERICAN SOCIETY FOR TESTING MATERIALS"

1.3 REFERENCE STANDARDS

A. ACI 305- RECOMMENDED PRACTICE FOR HOT WEATHER CONCRETING.
B. ACI 306- RECOMMENDED PRACTICE FOR COLD WEATHER CONCRETING.
C. ASTM C33- CONCRETE AGGREGATES
D. ASTM C94- READY-MIXED CONCRETE
E. ASTM C143- TEST FOR SLUMP OF PORTLAND CEMENT CONCRETE
F. ASTM C150- PORTLAND CEMENT
G. ASTM C260- AIR-ENTRAINING ADMIXTURES FOR CONCRETE
H. ASTM C494- CHEMICAL ADMIXTURES FOR CONCRETE
I. ASTM C618- FLY ASH AND RAW OR CALCINED NATURAL POZZOLANS FOR USE IN PORTLAND CEMENT CONCRETE.

1.4 JOB CONDITIONS

A. COORDINATION:
   A.A. COORDINATE SCHEDULES OF CONCRETE WORK TO ALLOW ADEQUATE TIME FOR INSTALLATION OF OTHER RELATED WORK.
   A.B. VERIFY THAT ANCHOR BOLTS AND OTHER EMBEDDED STEEL ITEMS TO BE CAST INTO CONCRETE ARE PROPERLY PLACED.
   A.C. COORDINATE EARTHWORK AND SOILS REPORT RECOMMENDATIONS WITH PLACEMENT REQUIREMENTS.
   A.D. COORDINATE WITH FORM-WORK AND FINISHES SECTIONS TO PROVIDE FINISH FLOORLEVELNESS AND FLATNESS AS SPECIFIED HEREIN. SLOPE TO DRAINS AT GRADES AND PERCENT SLOPE SHOWN IN THE CONSTRUCTION DRAWINGS.

PART 2- SHOTCRETE WORK

2.1 SHOTCRETE MIX DESIGN

A. PROVIDE MIX DESIGNS THAT WILL MEET THE MINIMUM REQUIREMENTS LISTED HEREIN:
   A.A. MINIMUM 28-DAY STRENGTH: 4000 PSI
   A.B. TYPE I/II CEMENT
   A.C. SMALL AGGREGATE (1/2" MAX.)
   A.D. WATER/CEMENT RATIO OF .45 OR LESS
   A.E. AIR ENTRAINMENT NOT TO EXCEED 3%

B. MIX DESIGNS FOR SHOTCRETE CONTAINING FLY ASH: THE AMOUNT OF FLY ASH USED SHALL NOT EXCEED 20% BY WEIGHT OF THE COMBINED WEIGHT OF FLY ASH PLUS CEMENT.

2.2 CONCRETE APPLICATION EQUIPMENT

A. FOR WET MIX SHOTCRETE:
   A.A. MIXING EQUIPMENT: CAPABLE OF THOROUGHLY MIXING AGGREGATE, CEMENT AND WATER IN SUFFICIENT QUANTITY TO MAINTAIN CONTINUOUS PLACEMENT.
   A.B. AIR SUPPLY: CLEAN AIR ADEQUATE FOR MAINTAINING SUFFICIENT NOZZLE VELOCITY FOR PARTS OF WORK, AND FOR SIMULTANEOUS OPERATION OF BLOW PIPE FOR CLEANING AWAY REBOUND.
   A.C. DELIVERY EQUIPMENT: CAPABLE OF DISCHARGING AGGREGATE-CEMENT-WATER MIXTURE ACCURATELY, UNIFORMLY, AND CONTINUOUSLY THROUGH DELIVERY HOSE.

PART 3- EXECUTION

3.1 INSPECTION

A. EXAMINATION: EXAMINE CONCRETE FORMWORK AND VERIFY THAT IT IS TRUE TO LINE AND DIMENSION, ADEQUATELY BRACED AGAINST VIBRATION, AND CONSTRUCTED TO PERMIT ESCAPE OF AIR AND REBOUND BUT TO PREVENT LEAKAGE DURING SHOTCRETING. CORRECT DEFICIENCIES.
B. NOTIFICATION: NOTIFY OTHER TRADES INVOLVED IN AMPLE TIME TO PERMIT THE PROPER INSTALLATION OF THEIR WORK. COOPERATE IN SETTING SUCH WORK.
C. EXISTING SURFACES: EXAMINE EXISTING CONCRETE SURFACES FOR UNSOUND MATERIAL. CORRECT DEFICIENCIES.

3.2 PREPARATION FOR INSTALLATION OF CONCRETE

A. FORMS: USE A FORM-COATING MATERIAL ON REMOVABLE FORMS TO PREVENT ABSORPTION OF MOISTURE AND TO PREVENT BOND WITH SHOTCRETE.

3.3 CONCRETE BATCHING AND MIXING

A. PROPORTIONS: MIX PROPORTIONS SHALL BE CONTROLLED BY WEIGHT BATCHING.
B. SCHEDULING: CONCRETE SHALL NOT EXCEED A TEMPERATURE OF 100 DEGREES FAHRENHEIT AT TIME OF PLACEMENT UNLESS PRE-APPROVED BY THE PROJECT ENGINEER.

3.4 CONCRETE PLACEMENT

A. PLACEMENT: USE SUITABLE DELIVERY EQUIPMENT AND PROCEDURES THAT WILL RESULT IN SHOTCRETE IN PLACE MEETING THE REQUIREMENTS OF THIS SPECIFICATION. DETERMINE OPERATING PROCEDURES FOR PLACEMENT IN, EXTENDED DISTANCES, AND AROUND ANY OBSTRUCTIONS WHERE PLACEMENT VELOCITIES AND MIX CONSISTENCY MUST BE ADJUSTED.
B. PLACEMENT TECHNIQUES:
   B.A. CONTROL THICKNESS, METHOD OF SUPPORT, AIR PRESSURE, AND/OR WATER CONTENT OF SHOTCRETE TO PRECLUDE SAGGING OR SLOUGHING OFF. DISCONTINUE SHOTCRETING OR PROVIDE SUITABLE MEANS TO SCREEN THE NOZZLE STREAM IF WIND OR AIR CURRENTS CAUSE SEPARATION OF THE NOZZLE STREAM DURING PLACEMENT.
   B.B. HOLD NOZZLE AS PERPENDICULAR TO SURFACE AS WORK WILL PERMIT, TO SECURE MAXIMUM COMPACTION WITH MINIMUM REBOUND.
   B.C. IN SHOTCRETING WALLS, BEGIN APPLICATION AT BOTTOM. ENSURE WORK DOES NOT SAG.
   B.D. LAYERING:
      B.D.A. BUILD UP LAYERS BY MAKING SEVERAL PASSES OF NOZZLE OVER WORK AREA.
      B.D.B. MAKE SURE SURFACE IS ADEQUATELY ROUGH TO WHICH, AFTER HARDENING, ADDITIONAL LAYERS OF SHOTCRETE ARE TO BE BONDED.
      B.D.C. DAMPEN SURFACE (ACHIEVE SATURATED SURFACE DRY (SSD) CONDITION) JUST PRIOR TO APPLICATION OF SUCCEEDING LAYERS.
      B.D.D. ALLOW EACH LAYER OF SHOTCRETE TO TAKE INITIAL SET BEFORE APPLYING SUCCEEDING LAYERS.
      B.D.E. USE RADIAL TEMPLATES TO INSURE EXACT RADII FROM FLAT BOTTOM OF BOWL/PIPE TO FACE OF COPING. TEMPLATE SHALL BE FABRICATED FROM STEEL OR 3/4" MINIMUM PLYWOOD. CHECK EVERY HORIZONTAL FOOT WHEN APPLYING SHOTCRETE FOR CONFORMANCE OF INTENDED WALL RADII. BRACE TEMPLATE AND PLACE LEVELS AT ARC TO TANGENT CONNECTIONS TO INSURE NO KINKS WILL BE FORMED. KINKS AT THE BOTTOM OF BOWLS WILL NOT BE ACCEPTABLE. SLUMPING OF THE SHOTCRETE CAUSING COPING SETBACK WILL NOT BE ACCEPTABLE.
      B.D.F. REMOVE ANY REBOUND OR ACCUMULATED LOOSE AGGREGATE FROM SURFACES TO BE COVERED PRIOR TO PLACING THE INITIAL OR ANY SUCCEEDING LAYERS OF SHOTCRETE. REBOUND SHALL NOT BE USED AS AGGREGATE.
   B.E. PLACEMENT AROUND REINFORCEMENT:
      B.E.A. HOLD THE NOZZLE AT SUCH DISTANCE AND ANGLE TO PLACE MATERIALS BEHIND REINFORCEMENT BEFORE ANY MATERIAL IS ALLOWED TO ACCUMULATE ON ITS FACE.
   B.F. ACCESS: ALLOW EASY ACCESS TO SHOTCRETE SURFACES FOR SCREEDING AND FINISHING, PERMITTING UNINTERRUPTED APPLICATION.

3.14 REMOVAL OF SURFACE DEFECTS IN CONCRETE

A. GENERAL: REMOVE AND REPLACE SHOTCRETE WHICH LACKS UNIFORMITY, EXHIBITS SEGREGATION, HONEYCOMBING, OR LAMINATION, OR WHICH CONTAINS ANY DRY PATCHES, SLUGS, VOIDS OR POCKETS. REMOVE DEFECTIVE AREAS.

3.15 SHOTCRETE FINISH

A. **FINISH: ALL EXPOSED SHOTCRETE SURFACES ARE TO BE HARD STEEL TROWEL FINISH UNLESS OTHERWISE NOTED. TROWEL UNTIL ALL VISIBLE POURS ARE CLOSED. CEASE TROWEL BEFORE GLASS FORMS ON SURFACE. DO NOT BROOM FINISH AND DO NOT BURN SURFACE.**
B. GRINDING THE SURFACES WILL NOT BE AN ACCEPTABLE MEANS OF ACHIEVING THE INTENDED RADII/ANGLE.
C. COLOR: ALL SHOTCRETE SURFACES ARE TO BE NATURAL GRAY COLOR UNLESS OTHERWISE NOTED. MINOR VARIATIONS IN APPEARANCE OF COLORED CONCRETE, WHICH ARE SIMILAR TO NATURAL VARIATIONS IN COLOR AND APPEARANCE OF UNCOLORED CONCRETE, ARE ACCEPTABLE. DO NOT BROOM FINISH AND DO NOT TROWEL BURN SURFACE.
D. DURING THE CURING PERIOD, CONCRETE SHALL BE MAINTAINED AT A TEMPERATURE ABOVE 40 DEGREES FAHRENHEIT AND IN MOIST CONDITION. FOR INITIAL CURING, CONCRETE SHALL BE KEPT CONTINUOUSLY MOIST FOR 24 HOURS AFTER PLACEMENT IS COMPLETE. FINAL CURING SHALL CONTINUE FOR SEVEN DAYS AFTER PLACEMENT. COVER CONCRETE WITH POLYETHYLENE PLASTIC TO MAINTAIN TEMPERATURE IF NECESSARY. LAP SEAMS IN THE PLASTIC 6" AND WEIGH DOWN.
E. THE CONTRACTOR SHALL FIX ALL CRACKS AND DISPLACEMENTS LARGER THAN 3/16" UP TO THE PROJECT COMPLETION.

3.16 CONCRETE PROTECTION AND CURING

1. NERAL: PROTECT FRESHLY PLACED CONCRETE FROM PREMATURE DRYING AND EXCESSIVE COLD OR HOT TEMPERATURES. COMPLY WITH ACI 306.1 FOR COLD-WEATHER PROTECTION AND FOLLOW RECOMMENDATIONS IN ACI 305R FORHOT-WEATHER PROTECTION DURING CURING. KEEP MOIST FOR NECESSARY AMOUNT OF TIME TO REACH CONCRETE STRENGTH AND INHIBIT MOISTURE LOSS AFTER PLACING.
2. EVAPORATION RETARDANT: WATERBORNE, MONOMOLECULAR FILM FORMING, MANUFACTURED FOR APPLICATION TO FRESH CONCRETE, SUCH AS EUCOBAR EVAPORATION RETARDANT BY THE EUCLID CHEMICAL COMPANY. APPLY EVAPORATION RETARDANT TO CONCRETE SURFACES IF HOT, DRY, OR WINDY CONDITIONS CAUSE MOISTURE LOSS BEFORE AND DURINGFINISHING OPERATIONS. APPLY TO EXPOSED SURFACE OF CONCRETE ACCORDING TO MANUFACTURERS WRITTEN INSTRUCTIONS AS NECESSARY.
3. BEGIN CURING AFTER FINISHING CONCRETE, BUT NOT BEFORE FREE WATER HAS DISAPPEARED FROM CONCRETE SURFACE.
4. CURING METHODS: CURE CONCRETE BY CURING COMPOUND, MOISTURE CURING, MOISTURE-RETAINING-COVER CURING, OR A COMBINATION OF THESE AS FOLLOWS:
   A. CURING COMPOUND: MEET REQUIREMENTS OF MANUFACTURER'S CURRENT PRINTED APPLICATION INSTRUCTIONS AND COVERAGE RATE CHART. FOR HORIZONTAL APPLICATIONS, IMMEDIATELY APPLY AFTER ALL SURFACE WATER HAS DISAPPEARED AND THE CONCRETE SURFACE IS HARD ENOUGH TO WALK ON. FOR VERTICAL APPLICATIONS, APPLY IMMEDIATELY AFTER REMOVING THE CONCRETE FORMS. APPLY IN A UNIFORM AND CONTINUOUS MANNER. AVOID OVER-APPLICATION OR PUDDLING OF CURING COMPOUND. PROTECT SURFACE FROM WATER, ADJACENT SHOTCRETE WORK, AND DEBRIS.
   B. MOISTURE CURING: KEEP SURFACES CONTINUOUSLY MOIST FOR NOT LESS THAN SEVEN DAYS WITH THE FOLLOWING MATERIALS:
      B.A. WATER.
      B.B. CONTINUOUS WATER-FOG SPRAY.
      B.C. ABSORPTIVE COVER, WATER SATURATED, AND KEPT CONTINUOUSLY WET. COVER CONCRETE SURFACES AND EDGES, OVERLAP SEAMS MIN. 6" BETWEEN ADJACENT ABSORPTIVE COVERS.
   C. MOISTURE-RETAINING-COVER CURING:
      C.A. COVER CONCRETE SURFACES WITH MOISTURE-RETAINING COVER FOR CURING CONCRETE, PLACED IN WIDEST PRACTICABLE WIDTH, WITH SIDES AND ENDS LAPPED AT LEAST 6 INCHES.

3.17 CURING MATERIALS

1. ABSORPTIVE COVER: AASHTO M 182, CLASS 2, BURLAP CLOTH MADE FROM JUTE OR KENAF, WEIGHING APPROXIMATELY 9OZ./SQ. YD. DRY.
2. MOISTURE-RETAINING COVER: ASTM C 171, POLYETHYLENE FILM OR WHITE BURLAP-POLYETHYLENE SHEET (BUR LENE).
3. WATER: POTABLE.
4. CURING COMPOUND: ASTM C-309, CLEAR, WATER-BASED, NO VOLATILE, NON-STAINING, MEMBRANE-FORMING, COMPATIBLE WITH SUBSEQUENT CONCRETE TREATMENTS. ACCEPTABLE PRODUCT: W.R. MEADOWS 1100-CLEAR, OR APPROVED EQUAL.

3.18 CONCRETE JOINTS

A. CLEANING: THE ENTIRE JOINT SHALL BE THOROUGHLY CLEANED AND WETTED PRIOR TO THE APPLICATION OF ADDITIONAL SHOTCRETE.
B. REINFORCEMENT: MAKE JOINTS PERPENDICULAR TO THE MAIN REINFORCEMENT. CONTINUE REINFORCEMENT ACROSS JOINTS.

3.19 CRACKING

A. SAW CUT CONTROL JOINTS AND CONSTRUCTION JOINTS MAY BE SHOWN IN THE CONSTRUCTION DRAWINGS FOR DIAGRAMMATIC PURPOSES ONLY. THE CONTRACTOR MAY, WITH APPROVAL OF THE SKATEPARK DESIGNER, RECOMMEND AND DETAIL ADDITIONAL JOINTS TO HELP PREVENT CRACKING.
B. THE CONTRACTOR SHALL FIX ALL CRACKS AND DISPLACEMENTS LARGER THAN 3/16" UP TO PROJECT COMPLETION.

Know what's **below.** **Call** before you dig.
1-800-227-2600 CA

PROGRESS SET - NOT FOR CONSTRUCTION

APPROVAL

CITY APPROVED BY:
DIRECTOR OF PUBLIC WORKS DATE
CITY REVIEWED BY:
SENIOR ENGINEER DATE
SUBMITTED BY:
DATE

CLIENT
Creating a better tomorrow. Together.
CITY OF LANCASTER
44933 FERN AVENUE
LANCASTER, CA 93534

PROJECT NAME
EL DORADO PARK RENOVATION
PWCP NO. 24-008
44501 5th STREET EAST
LANCASTER, CA 93534

ENGINEER/ARCHITECT
SPOHN RANCH SKATEPARKS
6824 S. CENTINELA AVE.
LOS ANGELES, CA 90230
P:626-330-5803 F:626-330-5503

STAMP

ISSUE

REV.	DESCRIPTION	DATE
	COMPOSITE SET	9/24/25

PROJECT IDENTIFICATION
THIS DRAWING WAS CREATED IN AUTODESK AUTOCAD V. 2021 UNLESS OTHERWISE NOTED.
THE ORIGINAL SIZE OF THIS SHEET IS 30" X 42"
THESE DRAWINGS AND SPECIFICATIONS ARE THE PROPERTY AND COPYRIGHT OF IDS GROUP AND SHALL NOT BE USED ON ANY OTHER PROJECT OR LOCATIONS EXCEPT AS DESCRIBED ON THE DRAWINGS, WITHOUT THE WRITTEN AGREEMENT WITH IDS GROUP.

SRKP PROJECT NO.	XXXX
DRAWN BY	ZM, DM
CHECKED BY	VO
APPROVED BY	DH

SHEET TITLE
SPECIFICATIONS

SHEET NUMBER
SK2.0
SHEET NO. XXX OF XXX
CUMULATIVE SHEET NO. XXX OF XXX

IDS GROUP - FILE LOCATION: G:\MY DRIVE\SKATEPARK PROJECTS\LANCASTER EL DORADO, CA\CAD\SHEETS\SPECIFICATIONS PLOT DATE: 5/24/2023 9:42:27 AM USER: ZACHM

SKATE ELEMENTS TO BE PROVIDED BY
SPOHN RANCH SKATEPARKS
CONTACT VINCE ONEL
VINCE@SPOHNRANCH.COM
626-330-5803

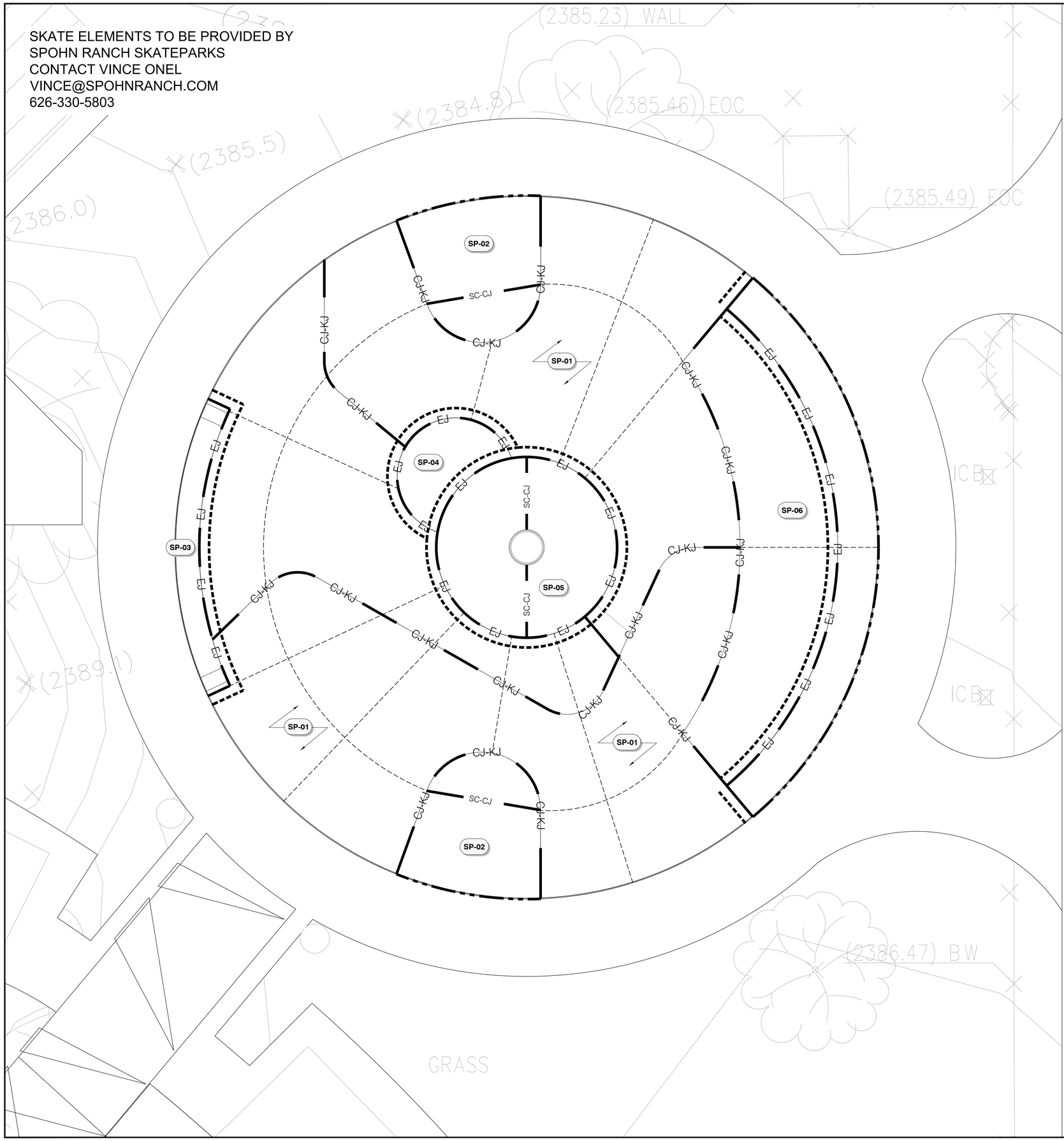

JOINTING SCHEDULE

SYMBOL	DESCRIPTION	QTY	DETAIL
EJ	EXPANSION JOINT	181 LF	5/SK9.0
CJ-KJ	COLD JOINT / KEY JOINT	222 LF	7/SK9.0
	SAWCUT	283 LF	6/SK9.0
SC-CJ	SC / CJ	39 LF	
H-05	TURNDOWN EDGE AT FINISH SURFACE	191 LF	4/SK9.0
H-06	TURNDOWN EDGE AT FINISH GRADE	93 LF	3/SK9.0

INFORMATION SCHEDULE

SYMBOL	DESCRIPTION	DETAIL	SECTION
SP-01	4" THICK CONCRETE FLATWORK		
SP-02	ROLLOVER	8/SK9.0	A
SP-03	GRIND LEDGE		B
SP-04	CIRCLE MANUAL PAD		C
SP-05	VOLCANO MANUAL PAD COMBO		D
SP-06	SLAPPY MOON		D

**JOINT PLAN HAS BEEN DEVELOPED TO PROVIDE GUIDANCE TO THE CONTRACTOR FOR THE USE OF SAW CUTS, COLD & EXPANSION JOINTS. ACTUAL FIELD VARIANCES WILL TAKE PRECEDENCE OVER THIS GUIDE. CONTRACTOR SHALL CUT SLAB AS NEEDED TO MINIMIZE CRACKING.

ALIGN SAW CUTS WITH EXPANSION AND COLD JOINTS AND START FROM CORNERS WHERE POSSIBLE TO PREVENT EXCESS CRACKING. SAW CUTS SHALL BE NO MORE THAN 10' X 12' AND/OR NOT TO EXCEED 120 SQUARE FEET AND A 2:1 MAX. RATIO BETWEEN SAW CUTS AND COLD OR EXPANSION JOINTS.

ALL SAW CUTS TO BE FILLED WITH SELF-LEVELING POLYURETHANE SEALANT AND TOOLED FLAT. MASK ALL SAW CUT/CONSTRUCTION JOINT EDGES TO PROTECT SURROUNDING CONCRETE FROM EXCESS SEALANT. EXPANSION JOINTS TO BE FILLED WITH POLYURETHANE BASED NON- SAGGING ELASTOMERIC SEALANT AND TOOLED FLAT. COLOR OF CAULK SHOULD RESEMBLE COLOR OF CONCRETE (ALUMINUM GRAY OR SIMILAR)

** PROVIDE ⅛" TOOLED EDGES TO JOINTS - SEE TYPICAL DETAILS & CONSTRUCTION SPECIFICATIONS FOR JOINT INFORMATION & INSTALLATION

NOTES:

1. SEE SHEET SK4.0 FOR COLOR PLAN.
2. THE SLAB CONFIGURATION, NOTES, LOCATION OF EXPANSION JOINTS, COLD JOINTS, SAW CUTS, DETAIL REFERENCES, AND APPLICABLE DETAILS HAVE BEEN INCLUDED FOR CLARITY. JOINTS AND DETAILS SHOWN ARE FOR THE SKATEPARK ONLY. REFER TO THE LANDSCAPE PLANS FOR SCOPES BEYOND THE SKATEPARK.
3. SUGGESTED ORDER OF CONSTRUCTION FOR CONCRETE ELEMENTS WITHIN THE SKATEPARK FOOTPRINT:
   A. SUBGRADE PREP - GRADE, MOISTURE CONDITION, AND COMPACT SKATEPARK FOOTPRINT TO +/- .1' OF SPECIFIED SUBGRADE ELEVATIONS.
   B. FINE GRADING
   C. LEDGES AND MANUAL PADS
   D. BANKS AND TRANSITIONS
   E. FLOOR SLAB/FLATWORK
4. ALL EXPOSED CONCRETE AND SHOTCRETE SURFACES TO BE NATURAL GRAY IN COLOR WITH HARD STEEL TROWEL FINISH UNLESS OTHERWISE SPECIFIED.

NORTH
0 2' 4' 8'
Scale: 1/4" = 1'-0"

APPROVAL

CITY APPROVED BY:
DIRECTOR OF PUBLIC WORKS DATE
CITY REVIEWED BY:
SENIOR ENGINEER DATE
SUBMITTED BY:
DATE

CLIENT
LANCASTER
Creating a better tomorrow. Together.
CITY OF LANCASTER
44933 FERN AVENUE
LANCASTER, CA 93534

PROJECT NAME
EL DORADO PARK RENOVATION
PWCP NO. 24-008
44501 5th STREET EAST
LANCASTER, CA 93534

ENGINEER/ARCHITECT
SPOHN RANCH SKATEPARKS
6824 S. CENTINELA AVE.
LOS ANGELES, CA 90230
P:626-330-5803 F:626-330-5503

STAMP

ISSUE

REV.	DESCRIPTION	DATE
	COMPOSITE SET	9/24/25

PROJECT IDENTIFICATION
THIS DRAWING WAS CREATED IN AUTODESK AUTOCAD V. 2021 UNLESS OTHERWISE NOTED.
THE ORIGINAL SIZE OF THIS SHEET IS 30" X 42"
THESE DRAWINGS AND SPECIFICATIONS ARE THE PROPERTY AND COPYRIGHT OF IDS GROUP AND SHALL NOT BE USED ON ANY OTHER PROJECT OR LOCATIONS EXCEPT AS DESCRIBED ON THE DRAWINGS, WITHOUT THE WRITTEN AGREEMENT WITH IDS GROUP.

SRKP PROJECT NO.	XXXX
DRAWN BY	ZM, DM
CHECKED BY	VO
APPROVED BY	DH

SHEET TITLE
INFORMATION PLAN

SHEET NUMBER
SK3.0
SHEET NO. XXX OF XXX
CUMULATIVE SHEET NO. XXX OF XXX

PROGRESS SET - NOT FOR CONSTRUCTION

IDS GROUP - FILE LOCATION: G:\MY DRIVE\SKATEPARK PROJECTS\LANCASTER EL DORADO, CA\CAD\SHEETS\INFORMATION PLAN PLOT DATE: 5/24/2023 9:42:43 AM USER: ZACHM

SKATE ELEMENTS TO BE PROVIDED BY
SPOHN RANCH SKATEPARKS
CONTACT VINCE ONEL
VINCE@SPOHNRANCH.COM
626-330-5803

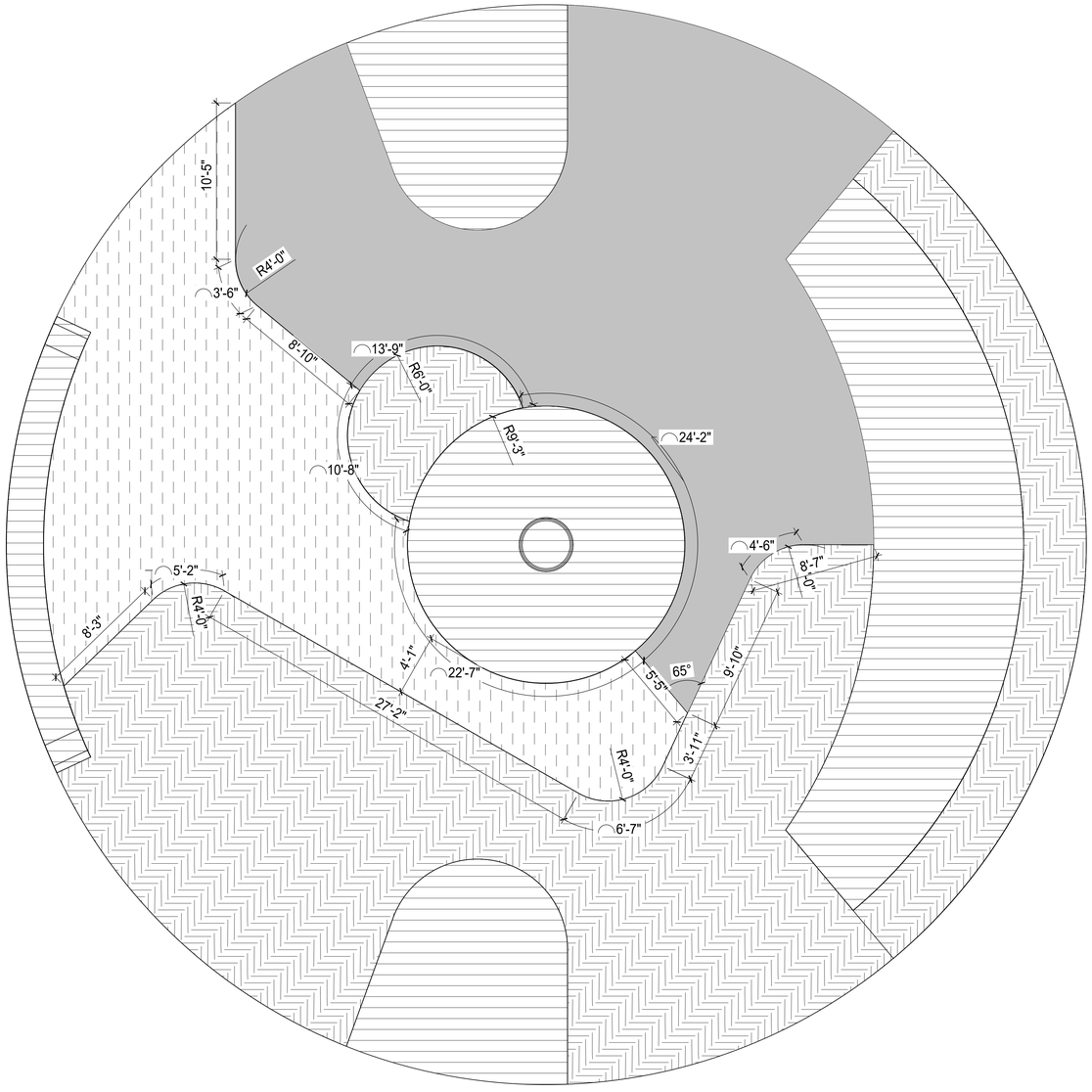

REFERENCE NOTES SCHEDULE COLOR

SYMBOL	COLOR DESCRIPTION	QTY
C-01	COLORED CAST-IN-PLACE CONCRETE TO BE PALOMINO BY EA PIGMENTS OR APPROVED EQUAL	1,116 SF
C-02	CAST-IN-PLACE CONCRETE TO BE NATURAL GRAY	654 SF
C-03	COLORED CAST-IN-PLACE CONCRETE TO BE COLUMBIA LT. GRAY BY EA PIGMENTS OR APPROVED EQUAL	927 SF
C-04	COLORED CAST-IN-PLACE CONCRETE TO BE CHARCOAL BY EA PIGMENTS OR APPROVED EQUAL	1,372 SF

COLOR NOTES:

1. CONCRETE COLOR AVAILABLE FROM EA PIGMENTS 1-888-222-7501, OR APPROVED EQUAL.
2. FINISH: ALL EXPOSED CONCRETE SURFACES ARE TO BE HARD STEEL TROWEL FINISH UNLESS OTHERWISE NOTED. TROWEL UNTIL ALL VISIBLE PORES ARE CLOSED. CEASE TROWELING BEFORE SURFACE BECOMES GLOSSY. DO NOT BROOM FINISH AND DO NOT TROWEL BURN SURFACE.
3. REFER TO STEEL PLAN ON SHEET SK7.0 FOR STEEL FINISH.

NORTH

0 2' 4' 8'
Scale: 1/4" = 1'-0"

APPROVAL

CITY APPROVED BY:

DIRECTOR OF PUBLIC WORKS DATE
CITY REVIEWED BY:

SENIOR ENGINEER DATE
SUBMITTED BY:

DATE

CLIENT

LANCASTER
Creating a better tomorrow. Together.

CITY OF LANCASTER

44933 FERN AVENUE
LANCASTER, CA 93534

PROJECT NAME

EL DORADO PARK RENOVATION

PWCP NO. 24-008

44501 5th STREET EAST
LANCASTER, CA 93534

ENGINEER/ARCHITECT

SPOHN RANCH SKATEPARKS

6824 S. CENTINELA AVE.
LOS ANGELES, CA 90230
P:626-330-5803 F:626-330-5503

STAMP

ISSUE

REV.	DESCRIPTION	DATE
	COMPOSITE SET	9/24/25

PROJECT IDENTIFICATION

THIS DRAWING WAS CREATED IN AUTODESK AUTOCAD V. 2021 UNLESS OTHERWISE NOTED.

THE ORIGINAL SIZE OF THIS SHEET IS 30" X 42"

THESE DRAWINGS AND SPECIFICATIONS ARE THE PROPERTY AND COPYRIGHT OF IDS GROUP AND SHALL NOT BE USED ON ANY OTHER PROJECT OR LOCATIONS EXCEPT AS DESCRIBED ON THE DRAWINGS, WITHOUT THE WRITTEN AGREEMENT WITH IDS GROUP.

SRKP PROJECT NO.	XXXX
DRAWN BY	ZM, DM
CHECKED BY	VO
APPROVED BY	DH

SHEET TITLE

COLOR PLAN

SHEET NUMBER

SK4.0

SHEET NO. XXX OF XXX

CUMULATIVE SHEET NO. XXX OF XXX

PROGRESS SET - NOT FOR CONSTRUCTION

IDS GROUP - FILE LOCATION: G:\MY DRIVE\SKATEPARK PROJECTS\LANCASTER EL DORADO, CA\CAD\SHEETS\COLOR-PLAN PLOT DATE: 5/24/2023 9:42:38 AM USER: ZACHM

SKATE ELEMENTS TO BE PROVIDED BY
SPOHN RANCH SKATEPARKS
CONTACT VINCE ONEL
VINCE@SPOHNRANCH.COM
626-330-5803

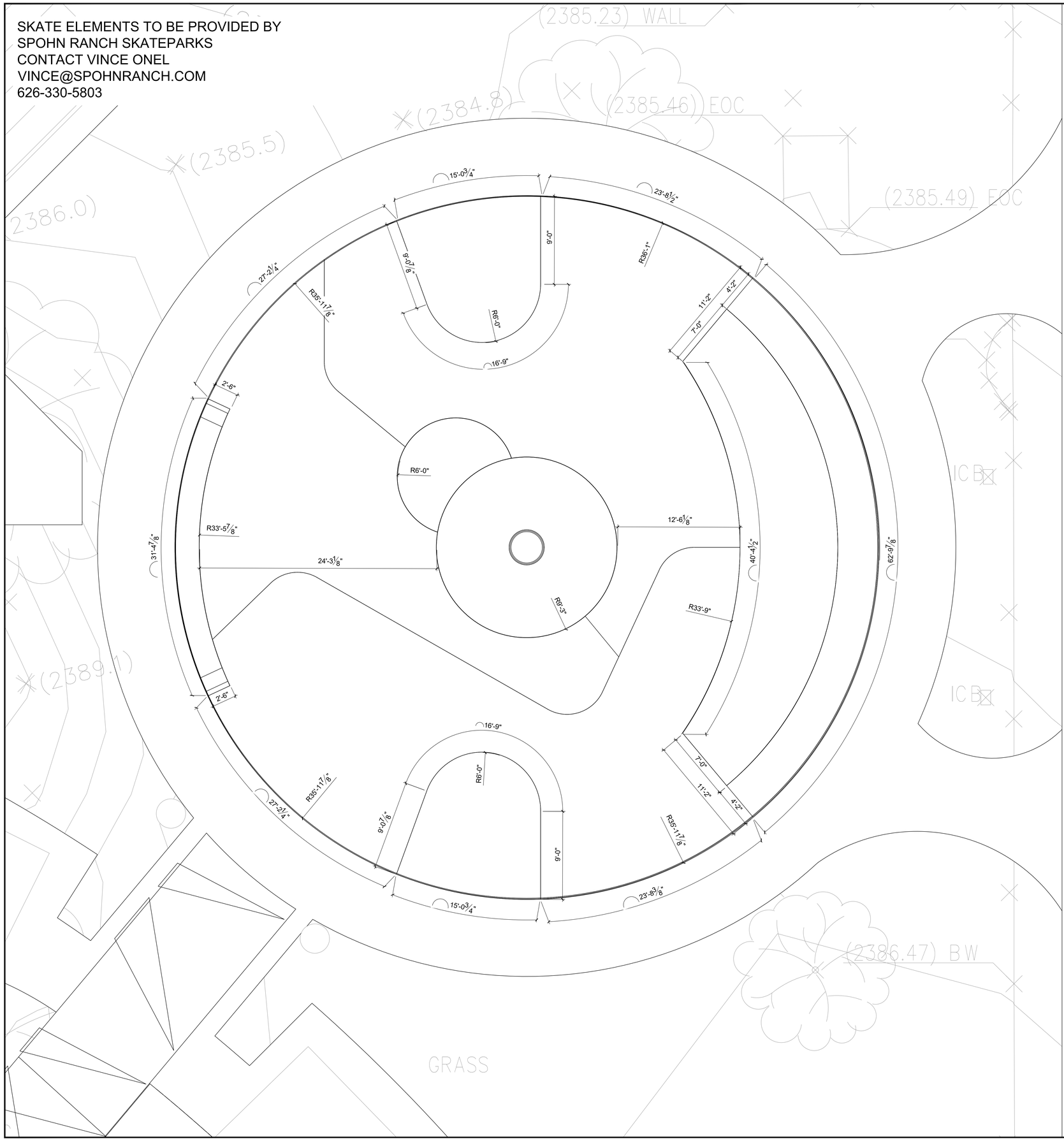

CONSTRUCTION NOTES:

1. ALL MATERIAL AND WORKMANSHIP SHALL CONFORM TO ALL APPLICABLE GOVERNING CODES AND ORDINANCES.
2. ALL FORMS AND ALIGNMENTS OF PAVING, LAYOUT, AND SPECIAL PAVING AREAS SHALL BE REVIEWED AND APPROVED BY THE OWNER'S REPRESENTATIVE PRIOR TO POURING (GIVE A MINIMUM OF 24 HOURS NOTICE)
3. CONTRACTOR SHALL VERIFY THE LOCATION OF ALL PUBLIC IMPROVEMENTS, INCLUDING UNDERGROUND UTILITIES PRIOR TO THE START OF CONSTRUCTION. CONTRACTOR SHALL REPAIR AND/OR REPLACE IN-KIND ALL PUBLIC IMPROVEMENTS DAMAGED, BROKEN, OR REMOVED DURING CONSTRUCTION
4. CONCRETE SHALL HAVE A MINIMUM COMPRESSIVE STRENGTH OF 4000 PSI AT 28 DAYS (UNLESS OTHERWISE NOTED).
5. ALL REBAR CROSSINGS TO BE TIED.
6. ALL CONSTRUCTION TO BE PLUMB AND TRUE, UNLESS OTHERWISE NOTED OR INDICATED.
7. THE CONTRACTOR SHALL VERIFY AND BE RESPONSIBLE FOR ALL DIMENSIONS AND CONDITIONS AT THE JOB SITE. ALL DISCREPANCIES SHALL BE BROUGHT TO THE IMMEDIATE ATTENTION OF THE SKATE PARK DESIGNER, OWNER/BUILDER OR OWNER'S REPRESENTATIVE.
8. THE CONTRACTOR IS SOLELY RESPONSIBLE FOR ALL CONSTRUCTION METHODS AND FOR SAFETY CONDITIONS AT THE WORK SITE.
9. ALL BRACING, TEMPORARY SUPPORTS, SHORING, ETC.. ARE THE SOLE RESPONSIBILITY OF THE CONTRACTOR.
10. OBSERVATION VISITS TO THE JOB SITE BY THE SKATE PARK DESIGNER OR OWNER, DO NOT INCLUDE INSPECTION OF CONSTRUCTION PROCEDURES. THE VISIT SHALL NOT BE CONSTRUED AS CONTINUOUS AND DETAILED INSPECTIONS.
11. CONDITIONS NOT SPECIFICALLY SHOWN SHALL BE CONSTRUCTED SIMILAR TO THE DETAILS FOR THE RESPECTIVE MATERIALS.
12. THE DRAWINGS AND SPECIFICATIONS REPRESENT THE FINISHED CONSTRUCTION PRODUCT. THESE DOCUMENTS, ALTHOUGH PREPARED WITH CARE AND DILIGENCE, MAY CONTAIN ERRORS, OMISSIONS, CONTRADICTIONS, ETC. THE CONTRACTOR SHALL REVIEW ALL DOCUMENTS THOROUGHLY AND SHALL NOTIFY THE SKATE PARK DESIGNER IMMEDIATELY UPON ANY SUCH DISCOVERY OR DISCREPANCY. GOVERNING CODES SHALL THEN APPLY.
13. ALL SCALE DIMENSIONS ARE APPROXIMATE. WRITTEN DIMENSIONS AND DETAILS TAKE PRECEDENCE OVER SCALED DIMENSIONS. THE CONTRACTOR SHALL CHECK AND VERIFY ALL SITE DIMENSIONS PRIOR TO PROCEEDING WITH WORK AND CLARIFY WITH SKATE PARK DESIGNER, OWNER IF NECESSARY.
14. DESIGN, MATERIAL, EQUIPMENT AND PRODUCTS OTHER THAN THOSE DESCRIBED OR INDICATED ON DRAWINGS MAY BE CONSIDERED FOR USE. APPROVAL FOR SUBSTITUTIONS SHALL BE OBTAINED FROM THE SKATE PARK DESIGNER.
15. SHOP DRAWINGS SHALL BE SUBMITTED BY THE CONTRACTOR FOR THE CLARIFICATION OF DESIGN CONCEPT DETAILS & SUBSTITUTIONS.
16. DURING WORK AND THROUGH ITS COMPLETION, THE CONTRACTOR SHALL KEEP THE SITE CLEAN TO THE SATISFACTION OF THE OWNER.
17. FINAL MATERIAL, FINISHES AND COLOR SHALL BE APPROVED BY OWNER AND SKATE PARK DESIGNER PRIOR TO INSTALLATION.
18. CLEAN-UP SHALL TAKE PLACE ON A DAILY BASIS.
19. REFER TO SPECIFICATIONS FOR ANY ADDITIONAL INFORMATION.

**ALL COLD JOINTS AT THE BOTTOM OF ALL RADIUS TRANSITIONS & RADIUS BANKS SHALL BE LOCATED 8" MAX. FROM THE POINT OF TANGENCY. SEE TYPICAL DETAILS FOR CLARIFICATION.

NORTH

0 2' 4' 8'
Scale: 1/4" = 1'-0"

APPROVAL

CITY APPROVED BY:

DIRECTOR OF PUBLIC WORKS DATE
CITY REVIEWED BY:

SENIOR ENGINEER DATE
SUBMITTED BY:

DATE

CLIENT

LANCASTER
Creating a better tomorrow. Together.

CITY OF LANCASTER

44933 FERN AVENUE
LANCASTER, CA 93534

PROJECT NAME

EL DORADO PARK RENOVATION

PWCP NO. 24-008

44501 5th STREET EAST
LANCASTER, CA 93534

ENGINEER/ARCHITECT

SPOHN RANCH SKATEPARKS

6824 S. CENTINELA AVE.
LOS ANGELES, CA 90230
P:626-330-5803 F:626-330-5503

STAMP

ISSUE

REV.	DESCRIPTION	DATE
	COMPOSITE SET	9/24/25

PROJECT IDENTIFICATION

THIS DRAWING WAS CREATED IN AUTODESK AUTOCAD V. 2021 UNLESS OTHERWISE NOTED.

THE ORIGINAL SIZE OF THIS SHEET IS 30" X 42"

THESE DRAWINGS AND SPECIFICATIONS ARE THE PROPERTY AND COPYRIGHT OF IDS GROUP AND SHALL NOT BE USED ON ANY OTHER PROJECT OR LOCATIONS EXCEPT AS DESCRIBED ON THE DRAWINGS, WITHOUT THE WRITTEN AGREEMENT WITH IDS GROUP.

SRKP PROJECT NO.	XXXX
DRAWN BY	ZM, DM
CHECKED BY	VO
APPROVED BY	DH

SHEET TITLE

LAYOUT PLAN

SHEET NUMBER

SK5.0

SHEET NO. XXX OF XXX

CUMULATIVE SHEET NO. XXX OF XXX

PROGRESS SET - NOT FOR CONSTRUCTION

IDS GROUP - FILE LOCATION: G:\MY DRIVE\SKATEPARK PROJECTS\LANCASTER EL DORADO, CA\CAD\SHEETS\LAYOUT-PLAN PLOT DATE: 5/24/2023 9:42:32 AM USER: ZACHM

SKATE ELEMENTS TO BE PROVIDED BY
SPOHN RANCH SKATEPARKS
CONTACT VINCE ONEL
VINCE@SPOHNRANCH.COM
626-330-5803

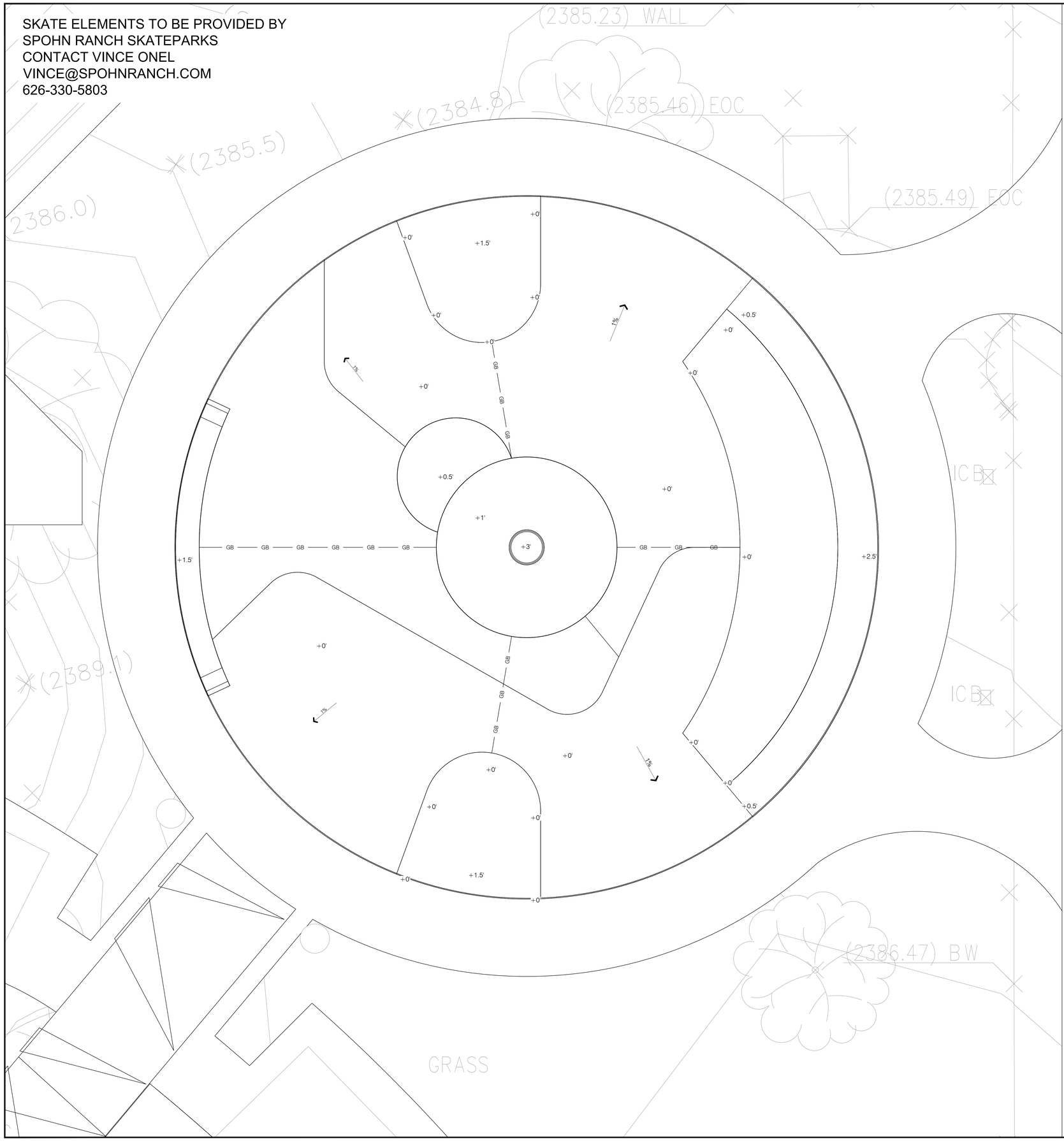

GRADING NOTES

1. ALL GRADING SHALL BE IN ACCORDANCE WITH THE LOCAL GRADING CODE AND ANY SPECIAL REQUIREMENTS OF THE GRADING PERMIT.
2. CONTRACTOR TO VERIFY GRADES AND NOTIFY OWNER'S CONSTRUCTION ADMINISTRATOR PRIOR TO START OF GRADING WORK.
3. SLOPES SHALL BE NO STEEPER THAN 3' HORIZONTAL TO 1' VERTICAL (3:1) AND SHALL HAVE NOT LESS THAN 90% COMPACTION OUT TO THEIR FINISH SURFACES.
4. ALL PAVED AREAS SHALL SLOPE AS SHOWN ON PLANS WITH A 2% MAXIMUM FALL. PLANTED AREAS SHALL HAVE A MINIMUM 2% FALL.
5. FINISH GRADE SHALL HAVE A UNIFORM SURFACE, FREE OF LUMPS, BUMPS AND DEPRESSIONS AND ANY OBJECTS THAT MAY PREVENT A POSITIVE FLOW TO DRAIN.
6. ALL PROPOSED PAVING SURFACES SHALL MEET EXISTING PAVING SURFACES WITH SMOOTH AND CONTINUOUS TRANSITIONS AND FLUSH ALONG ENTIRE EDGE.
7. CONCRETE WALKS TO HAVE A MAXIMUM CROSS SLOPE OF 2% AND SHALL MEET ALL CITY AND COUNTY REQUIREMENTS.
8. PRIOR TO CONSTRUCTION, CONTRACTOR SHALL VERIFY ALL UTILITY LOCATIONS, EXISTING DRAINAGE STRUCTURES, PARKING LOT IMPROVEMENTS, AND FINISH FLOOR ELEVATIONS. NOTIFY THE OWNER'S CONSTRUCTION ADMINISTRATOR IMMEDIATELY UPON NOTING ANY DISCREPANCIES.
9. FINISH GRADE AT TURF AREAS SHALL BE ONE INCH BELOW FINISH SURFACE OF SIDEWALKS, CURBS OR PAVED AREAS. PLANTING AREA FINISH GRADE SHALL BE 2" BELOW SAME UNLESS OTHERWISE SPECIFIED.
10. ALL CONSTRUCTION AREAS SHALL BE FREE OF ROCK, DEBRIS, ETC. ALL EXISTING WEEDS SHALL BE REMOVED.
11. CONTRACTOR SHALL MEET EXISTING GRADE AT GRADING LIMITS WITH A SMOOTH AND CONTINUOUS TRANSITION.

GRADING LEGEND:

- EXISTING CONTOURS
- PROPOSED CONTOURS
- GB — GB — PROPOSED GRADE BREAK
- XXX.XX FS — PROPOSED ELEVATIONS
- PROPOSED FLOW DIRECTION

BS	BOTTOM OF STEP
FG	FINISH GRADE
FS	FINISH SURFACE
HP	HIGH POINT
INV	INVERT ELEVATION (MAY CHANGE IN FIELD)
PA	PLANTING AREA
TD	TOP OF DRAIN
TL	TOP OF LEDGE
TP	TOP OF PAD
TR	TOP OF RAIL
TS	TOP OF STEP

XX.XX — EXISTING ELEVATION (VERIFY IN FIELD)

NORTH

0 2' 4' 8'
Scale: 1/4" = 1'-0"

APPROVAL

CITY APPROVED BY:

DIRECTOR OF PUBLIC WORKS — DATE
CITY REVIEWED BY:

SENIOR ENGINEER — DATE
SUBMITTED BY:

DATE

CLIENT

LANCASTER
Creating a better tomorrow. Together.

CITY OF LANCASTER
44933 FERN AVENUE
LANCASTER, CA 93534

PROJECT NAME

EL DORADO PARK RENOVATION

PWCP NO. 24-008

44501 5th STREET EAST
LANCASTER, CA 93534

ENGINEER/ARCHITECT

SPOHN RANCH SKATEPARKS

6824 S. CENTINELA AVE.
LOS ANGELES, CA 90230
P:626-330-5803 F:626-330-5503

STAMP

ISSUE

REV.	DESCRIPTION	DATE
	COMPOSITE SET	9/24/25

PROJECT IDENTIFICATION

THIS DRAWING WAS CREATED IN AUTODESK AUTOCAD V. 2021 UNLESS OTHERWISE NOTED.

THE ORIGINAL SIZE OF THIS SHEET IS 30" X 42"

THESE DRAWINGS AND SPECIFICATIONS ARE THE PROPERTY AND COPYRIGHT OF IDS GROUP AND SHALL NOT BE USED ON ANY OTHER PROJECT OR LOCATIONS EXCEPT AS DESCRIBED ON THE DRAWINGS, WITHOUT THE WRITTEN AGREEMENT WITH IDS GROUP.

SRKP PROJECT NO.	XXXX
DRAWN BY	ZM, DM
CHECKED BY	VO
APPROVED BY	DH

SHEET TITLE

GRADING + DRAINAGE PLAN

SHEET NUMBER

SK6.0

SHEET NO. XXX OF XXX

CUMULATIVE SHEET NO. XXX OF XXX

PROGRESS SET - NOT FOR CONSTRUCTION

IDS GROUP - FILE LOCATION: G:\MY DRIVE\SKATEPARK PROJECTS\LANCASTER EL DORADO, CA\CAD\SHEETS\GRADING-PLAN PLOT DATE: 5/24/2023 9:42:23 AM USER: ZACHM

SKATE ELEMENTS TO BE PROVIDED BY
SPOHN RANCH SKATEPARKS
CONTACT VINCE ONEL
VINCE@SPOHNRANCH.COM
626-330-5803

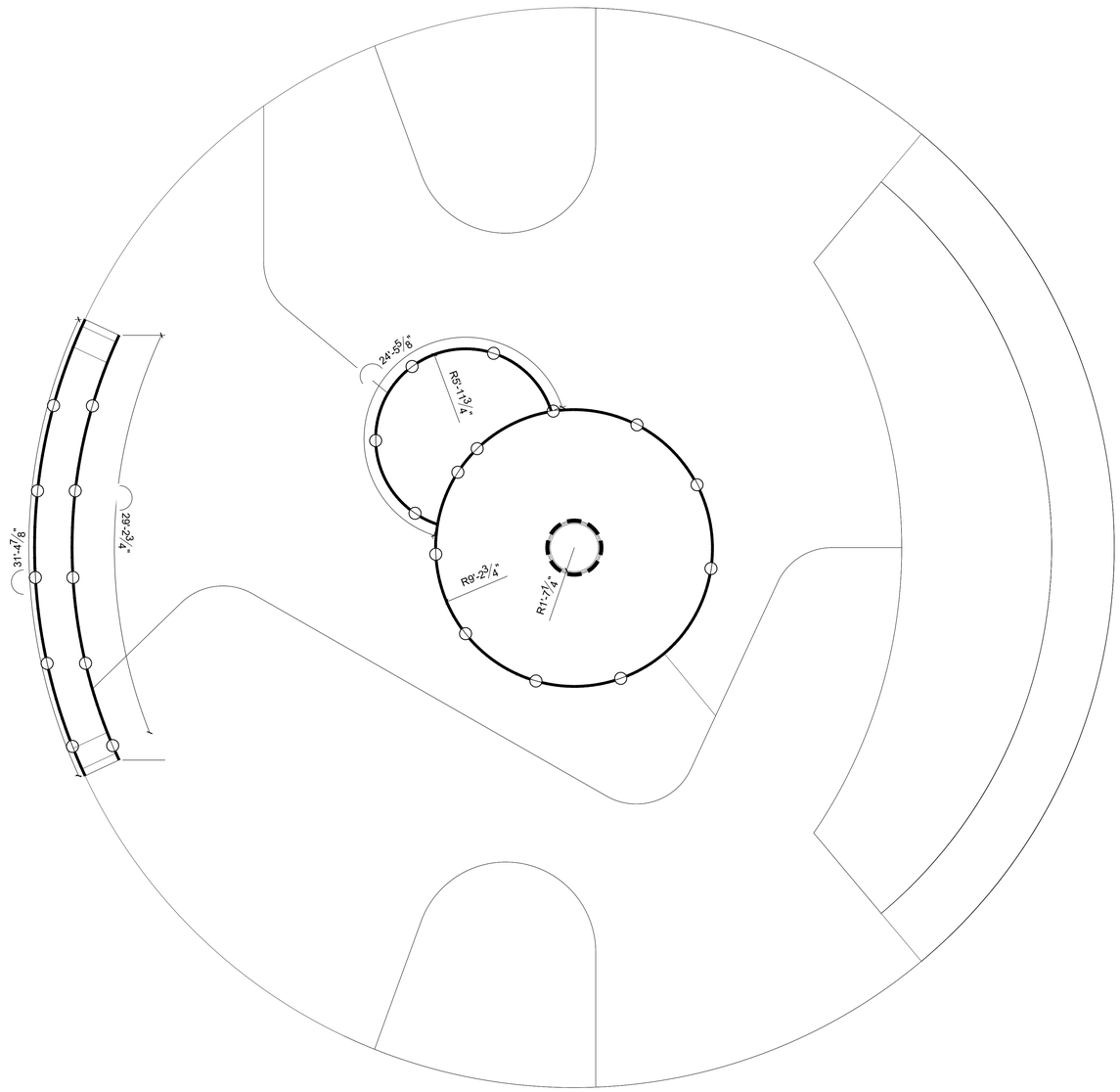

STEEL SCHEDULE STEEL

SYMBOL	DESCRIPTION	QTY	DETAIL	FINISH
S-01	2-3/8" O.D. SCH. 40 STEEL COPING	11 LF	9/SK9.0	HOT DIPPED GALVANIZED
S-02	STEEL FACEPLATE	143 LF	10/SK9.0	POWDER COAT RAL #5018

NOTES :

1. STEEL FINISH TO BE HOT DIPPED GALVANIZED OR POWDER COATED RAL #5018 (TURQUOISE BLUE) AS INDICATED IN LEGEND FINISH.
2. FINISH MUST OCCUR AFTER ALL WELDING IS COMPLETE.
3. CAP ALL EXPOSED TUBE OR PIPE ENDS AND ROUND ALL SHARP EDGES.
4. ALL WELDS TO BE ALL AROUND.
5. GRIND ALL WELDS SMOOTH BEFORE FINISHING.
6. FABRICATE STEEL GRIND EDGES IN LONG SECTIONS THAT WILL WORK FOR SHIPPING AND REDUCE THE NUMBER OF WELDS IN THE FIELD.
7. CLEAN METAL EDGES AFTER PLACEMENT OF CONCRETE.
8. POWDER COATING REPAIR - USE AN APPROPRIATELY COLOR MATCHED POWDER COAT TOUCH-UP SPRAY PAINT ON WELDED OR DAMAGED POWDER COATED SURFACES.
9. HOT DIPPED GALVANIZE REPAIR - FIELD WELDS SHALL BE GROUND SMOOTH AND TREATED WITH COLD GALVANIZING SPRAY.
10. SEE SK2.0 - METAL FABRICATIONS OF SPECBOOK FOR SKATEPARKS FOR ALL STEEL SPECIFICATIONS.

COPING / RAIL JOINT WELDS

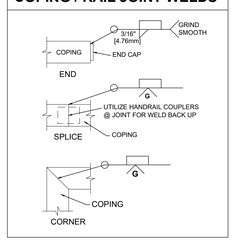

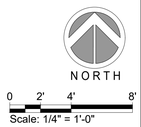

0 2' 4' 8'
Scale: 1/4" = 1'-0"

APPROVAL

CITY APPROVED BY:
DIRECTOR OF PUBLIC WORKS DATE
CITY REVIEWED BY:
SENIOR ENGINEER DATE
SUBMITTED BY:
DATE

CLIENT
LANCASTER
Creating a better tomorrow. Together.
CITY OF LANCASTER
44933 FERN AVENUE
LANCASTER, CA 93534

PROJECT NAME
EL DORADO PARK RENOVATION
PWCP NO. 24-008
44501 5th STREET EAST
LANCASTER, CA 93534

ENGINEER/ARCHITECT
SPOHN RANCH SKATEPARKS
6824 S. CENTINELA AVE.
LOS ANGELES, CA 90230
P:626-330-5803 F:626-330-5503

STAMP

ISSUE

REV.	DESCRIPTION	DATE
	COMPOSITE SET	9/24/25

PROJECT IDENTIFICATION
THIS DRAWING WAS CREATED IN AUTODESK AUTOCAD V. 2021 UNLESS OTHERWISE NOTED.
THE ORIGINAL SIZE OF THIS SHEET IS 30" X 42"
THESE DRAWINGS AND SPECIFICATIONS ARE THE PROPERTY AND COPYRIGHT OF IDS GROUP AND SHALL NOT BE USED ON ANY OTHER PROJECT OR LOCATIONS EXCEPT AS DESCRIBED ON THE DRAWINGS, WITHOUT THE WRITTEN AGREEMENT WITH IDS GROUP.

SRKP PROJECT NO.	XXXX
DRAWN BY	ZM, DM
CHECKED BY	VO
APPROVED BY	DH

SHEET TITLE
STEEL PLAN

SHEET NUMBER
SK7.0
SHEET NO. XXX OF XXX
CUMULATIVE SHEET NO. XXX OF XXX

PROGRESS SET - NOT FOR CONSTRUCTION

IDS GROUP - FILE LOCATION: G:\MY DRIVE\SKATEPARK PROJECTS\LANCASTER EL DORADO, CA\CAD\SHEETS\STEEL-PLAN PLOT DATE: 5/24/2023 9:42:52 AM USER: ZACHM

SKATE ELEMENTS TO BE PROVIDED BY
SPOHN RANCH SKATEPARKS
CONTACT VINCE ONEL
VINCE@SPOHNRANCH.COM
626-330-5803

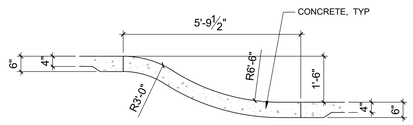

SECTION A

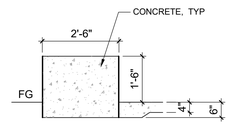

SECTION B

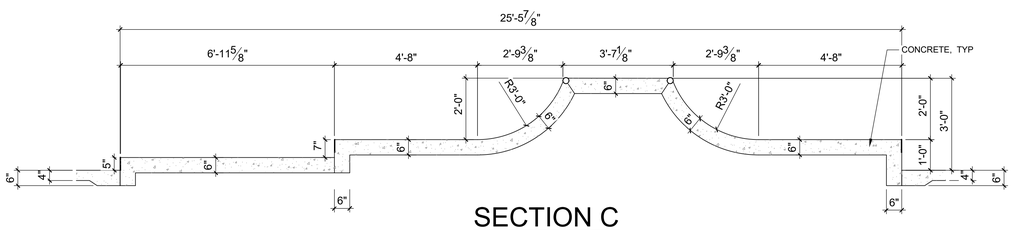

SECTION C

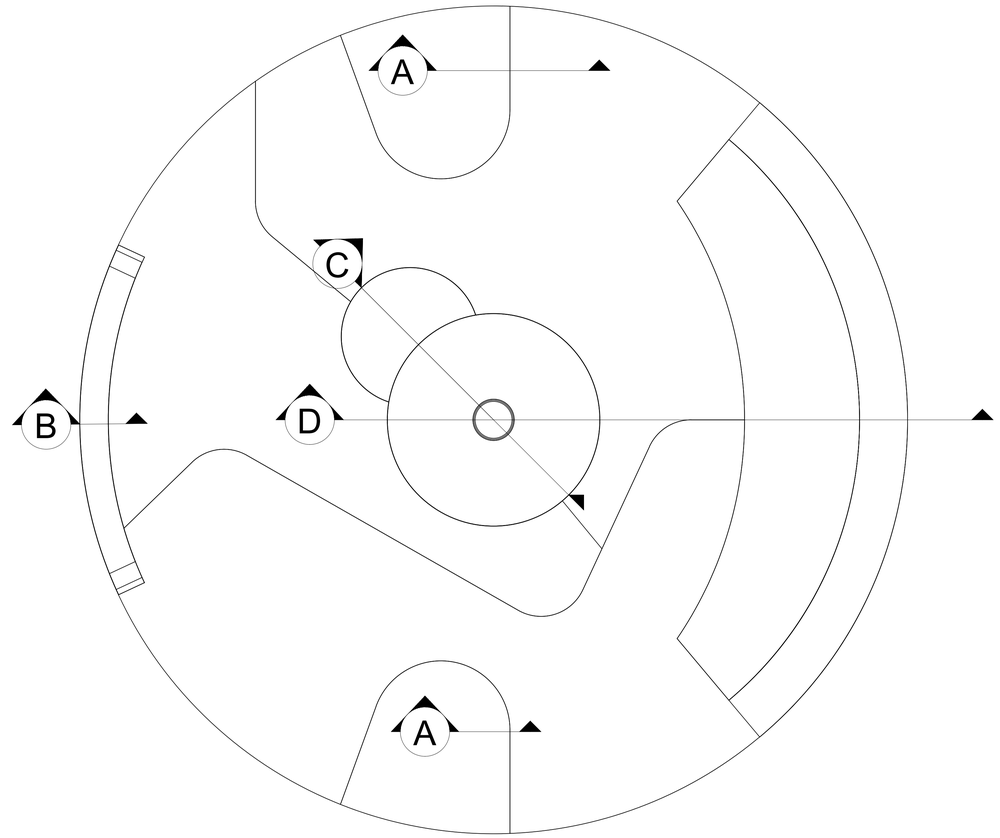

1 PLAN
SCALE: 3/16" = 1'-0"

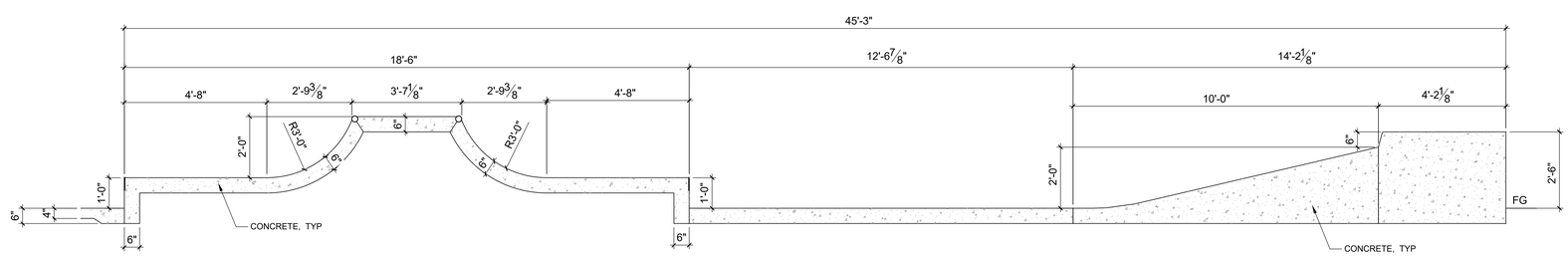

SECTION D

0 1' 2' 4'
Scale: 1/2" = 1'-0"

APPROVAL

CITY APPROVED BY:
DIRECTOR OF PUBLIC WORKS DATE
CITY REVIEWED BY:
SENIOR ENGINEER DATE
SUBMITTED BY:
DATE

CLIENT
LANCASTER
Creating a better tomorrow. Together.
CITY OF LANCASTER
44933 FERN AVENUE
LANCASTER, CA 93534

PROJECT NAME
EL DORADO PARK RENOVATION
PWCP NO. 24-008
44501 5th STREET EAST
LANCASTER, CA 93534

ENGINEER/ARCHITECT
SPOHN RANCH SKATEPARKS
6824 S. CENTINELA AVE.
LOS ANGELES, CA 90230
P:626-330-5803 F:626-330-5503

STAMP

ISSUE

REV.	DESCRIPTION	DATE
	COMPOSITE SET	9/24/25

PROJECT IDENTIFICATION
THIS DRAWING WAS CREATED IN AUTODESK AUTOCAD V. 2021 UNLESS OTHERWISE NOTED.
THE ORIGINAL SIZE OF THIS SHEET IS 30" X 42"
THESE DRAWINGS AND SPECIFICATIONS ARE THE PROPERTY AND COPYRIGHT OF IDS GROUP AND SHALL NOT BE USED ON ANY OTHER PROJECT OR LOCATIONS EXCEPT AS DESCRIBED ON THE DRAWINGS, WITHOUT THE WRITTEN AGREEMENT WITH IDS GROUP.

SRKP PROJECT NO.	XXXX
DRAWN BY	ZM, DM
CHECKED BY	VO
APPROVED BY	DH

SHEET TITLE
SECTIONS

SHEET NUMBER
SK8.0
SHEET NO. XXX OF XXX
CUMULATIVE SHEET NO. XXX OF XXX

PROGRESS SET - NOT FOR CONSTRUCTION

IDS GROUP - FILE LOCATION: G:\MY DRIVE\SKATEPARK PROJECTS\LANCASTER EL DORADO, CA\CAD\SHEETS\SECTIONS PLOT DATE: 5/24/2023 9:42:47 AM USER: ZACHM

1. *4000 PSI CONCRETE FLATWORK WITH #3 REBAR @ 16" O.C. BW
2. BASE COURSE, 4" DEEP MIN.
3. COMPACTED SUBGRADE
4. 1/2" TOOLED EDGE AT FG ONLY

*SKATEPARK SURFACE TO HAVE STEEL HARD-TROWEL FINISH. CEASE TROWELING BEFORE SURFACE BECOMES GLOSSY. DO NOT TROWEL BURN SURFACE.

**DIMENSION SHALL BE 1" BELOW FINISH SURFACE IF SLAB EDGE IS ADJACENT TO TURF OR 2" BELOW FINISH SURFACE IF SLAB EDGE IS ADJACENT TO PLANTING AREA

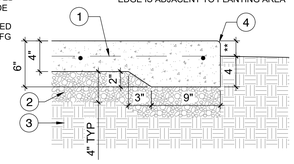

1 SLAB EDGE

1 1/2" = 1'-0" P-PIP-LAN-99

1. 4000 PSI CONCRETE FLATWORK WITH #3 REBAR @ 16" O.C. B.W.
2. COLD OR EXPANSION JOINT
3. SLEEVE FOR SLIP DOWEL OR WRAP/GREASE ONE END
4. 1/2" SMOOTH DOWEL OR REBAR DROP. SPACE 2'-6" O.C. ALONG JOINT

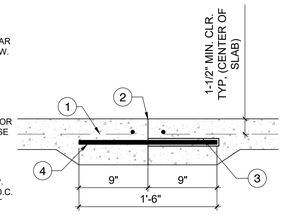

2 SLIP DOWEL

1 1/2" = 1'-0" P-PIP-LAN-02

1. 4000 PSI CONCRETE FLATWORK WITH #3 REBAR 16" O.C. BW
2. BASE COURSE
3. 1/2" TOOLED EDGE OR STEEL EDGING. SEE STEEL PLAN FOR LOCATION.
4. COMPACTED SUBGRADE

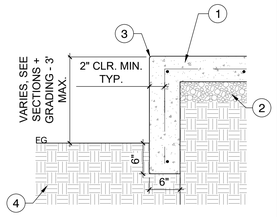

3 TURNDOWN EDGE AT FINISH GRADE

1" = 1'-0" P-PIP-LAN-01

1. EXPANSION JOINT
2. 4000 PSI CONCRETE FLATWORK WITH #3 REBAR 16" O.C. BW
3. SLIP DOWEL
4. BASE COURSE
5. 1/2" TOOLED EDGE OR STEEL EDGING. SEE STEEL PLAN FOR LOCATION.
6. COMPACTED SUBGRADE

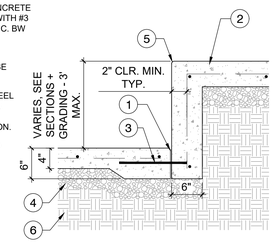

4 TURNDOWN EDGE AT FINISH SURFACE

1" = 1'-0" P-PIP-LAN-00

1. 4000 PSI CONCRETE FLATWORK WITH #3 REBAR @ 16" O.C. BW
2. PRE-COMPRESSED EXPANSION MATERIAL 1/2" DECK-O-FOAM OR SIMILAR
3. EXPANSION JOINT. 1/8" TOOLED EDGE. APPLY POLYURETHANE BASED NON-SAGGING ELASTOMERIC SEALANT AND TOOL FLAT
4. CONCRETE SKATE ELEMENT
5. SLIP DOWEL
6. BASE COURSE
7. COMPACTED SUBGRADE

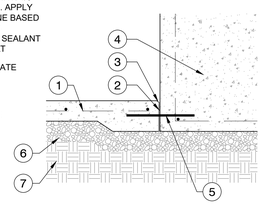

5 EXPANSION JOINT

1" = 1'-0" P-PIP-LAN-03

1. 4000 PSI CONCRETE FLATWORK WITH #3 REBAR @ 16" O.C. BW
2. 1/8" SAW CUT - FILL JOINT WITH SELF LEVELING SEALANT AND TOOL FLAT. PROTECT SURROUNDING SURFACE FROM EXCESS SEALANT.

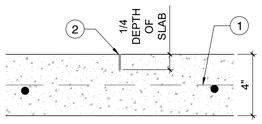

6 SAWCUT JOINT

3" = 1'-0" P-PIP-LAN-04

1. 4000 PSI CONCRETE FLAT WORK*
2. #3 REBAR @ 16" O.C. BOTH WAYS
3. 1/8" TOOLED EDGE BOTH SIDES
4. BASE COURSE
5. COMPACTED SUBGRADE
6. SLIP DOWEL
7. KEY JOINT 1-5/8" O.D.

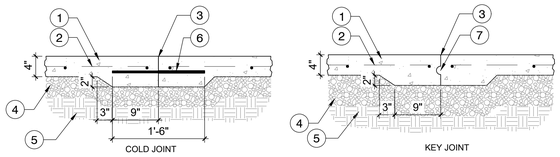

7 COLD JOINT / KEY JOINT

1" = 1'-0" P-PIP-LAN-05

1. 4000 PSI CONCRETE FLATOWRK WITH #3 REBAR CONTINUOUS BOTH WAYS @ 16" O.C.
2. 4000 PSI SHOTCRETE WITH #3 REBAR CONTINUOUS BOTH WAYS @ 12" O.C.
3. SLIP DOWEL
4. BASE COURSE
5. COMPACTED SUBGRADE
6. COLD JOINT

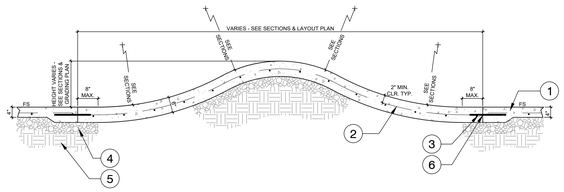

8 ROLLOVER

1/2" = 1'-0" P-PIP-LAN-57

1. 1/8" TOOLED EDGE BOTH SIDES OF COPING
2. STEEL COPING - SEE STEEL PLAN FOR LOCATION
3. CONSTRUCTION JOINT HAND SHAPED PRIOR TO CONCRETE CURING
4. TYPICAL STEEL REINFORCEMENT
5. BOWL TRANSITION
6. COPING ANCHOR, 3/8" X 4" MIN. NELSON STUD OR SIMILAR@ 18" O.C.
7. (2) #3 REBAR TIES TO SUPPORT COPING PRIOR TO CONCRETE PLACEMENT
8. 4000 PSI CONCRETE FLATWORK
9. BASE COURSE
10. COMPACTED SUB-GRADE
11. CONCRETE CYLINDER FOOTING. 8' O.C. ALONG BACK OF COPING & WHERE NEEDED ALONG SMALLER RADII
12. SPOT WELD TO COPING
13. TURN REBAR OUT 45 DEG

SEE STEEL PLAN FOR FABRICATION + FINISH NOTES

CONSTRUCTION NOTE: WHEN BUILDING SLAB/DECK BEHIND COPING CONSTRUCTION JOINT, FIRST SATURATE SURFACE DRY (SSD) PREVIOUSLY PLACED CONCRETE MATERIAL AND THEN UTILIZE SHOTCRETE PLACEMENT METHOD FOR THE INITIAL FRESH MATERIAL TO THE EXISTING MATERIAL OF DECK/SLAB BEHIND COPING FOR PROPER PLACEMENT AND CONSOLIDATION AT THE CONSTRUCTION JOINT.

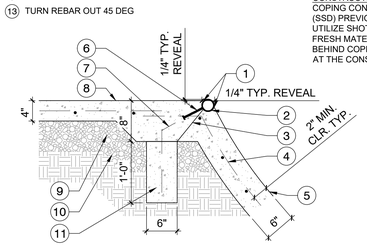

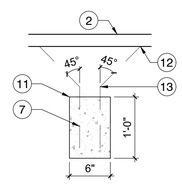

9 STEEL COPING

1" = 1'-0" P-PIP-LAN-10

1. 1/8" MIN. ROUTED EDGE GROUND SMOOTH
2. 6" x 3/16" THICK STEEL PLATE -SEE STEEL PLAN FOR LOCATION
3. COPING ANCHOR, 3/8" X 4" MIN. NELSON STUD OR SIMILAR @ 18" O.C.
4. 1/8" TOOLED EDGE BOTH SIDES
5. TYPICAL STEEL REINFORCEMENT
6. SKATE ELEMENT

SEE STEEL PLAN FOR FABRICATION + FINISH NOTES

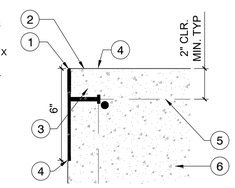

10 STEEL FACE PLATE

3" = 1'-0" P-PIP-LAN-07

SKATE ELEMENTS TO BE PROVIDED BY
SPOHN RANCH SKATEPARKS
CONTACT VINCE ONEL
VINCE@SPOHNRANCH.COM
626-330-5803

APPROVAL

CITY APPROVED BY:

DIRECTOR OF PUBLIC WORKS DATE
CITY REVIEWED BY:

SENIOR ENGINEER DATE
SUBMITTED BY:

DATE

CLIENT

LANCASTER
Creating a better tomorrow. Together.

CITY OF LANCASTER
44933 FERN AVENUE
LANCASTER, CA 93534

PROJECT NAME

EL DORADO PARK RENOVATION

PWCP NO. 24-008

44501 5th STREET EAST
LANCASTER, CA 93534

ENGINEER/ARCHITECT

SPOHN RANCH SKATEPARKS

6824 S. CENTINELA AVE.
LOS ANGELES, CA 90230
P:626-330-5803 F:626-330-5503

STAMP

ISSUE

REV.	DESCRIPTION	DATE
	COMPOSITE SET	9/24/25

PROJECT IDENTIFICATION

THIS DRAWING WAS CREATED IN AUTODESK AUTOCAD V. 2021 UNLESS OTHERWISE NOTED.

THE ORIGINAL SIZE OF THIS SHEET IS 30" X 42"

THESE DRAWINGS AND SPECIFICATIONS ARE THE PROPERTY AND COPYRIGHT OF IDS GROUP AND SHALL NOT BE USED ON ANY OTHER PROJECT OR LOCATIONS EXCEPT AS DESCRIBED ON THE DRAWINGS, WITHOUT THE WRITTEN AGREEMENT WITH IDS GROUP.

SRKP PROJECT NO.	XXXX
DRAWN BY	ZM, DM
CHECKED BY	VO
APPROVED BY	DH

SHEET TITLE

CONSTRUCTION DETAILS

SHEET NUMBER

SK9.0

SHEET NO. XXX OF XXX

CUMULATIVE SHEET NO. XXX OF XXX

PROGRESS SET - NOT FOR CONSTRUCTION

IDS GROUP - FILE LOCATION: G:\MY DRIVE\SKATEPARK PROJECTS\LANCASTER EL DORADO, CA\CAD\SHEETS\CONSTRUCTION-DETAILS PLOT DATE: 5/24/2023 9:42:35 AM USER: ZACHM

SPECIFICATIONS FOR CONSTRUCTION

1 GENERAL NOTES

1.1 THESE DESIGN DOCUMENTS WERE PREPARED BY 'VORTEX AQUATIC STRUCTURES INTERNATIONAL' FOR THE USE OF THEIR CLIENT ONLY. THE MATERIAL USED AND IDENTIFIED IN THEM REFLECTS VORTEX AQUATIC STRUCTURES INTERNATIONAL'S BEST JUDGMENT IN LIGHT OF THE INFORMATION AVAILABLE AT THE TIME OF PREPARATION. FOR THE PURPOSE OFTHESE DESIGN DOCUMENTS, 'VORTEX AQUATIC STRUCTURES INTERNATIONAL' IS SYNONYMOUS WITH 'VORTEX'.

1.2 VORTEX ACCEPTS NO RESPONSIBILITY FOR DAMAGES, IF ANY, SUFFERED BY ANY THIRD PARTY AS A RESULT OF DECISIONS MADE OR ACTIONS BASED ON THESE DESIGN DOCUMENTS WITHOUT THE PREVIOUS CONSULTATION TO VORTEX.

1.3 ALL WORK, MATERIALS AND THEIR ASSEMBLIES SHALL CONFORM TO THE STANDARDS, REGULATIONS AND CODES CURRENTLY IN FORCE FOR ALL TRADES, AISC, ACNOR, EN, OR IBC.

1.4 THESE DESIGN DOCUMENTS DO NOT INDICATE THE METHOD OR MEANS OF CONSTRUCTION. WHEN APPLICABLE, THE CONTRACTORS SHALL SUPERVISE AND DIRECT ALL THE WORKAND SHALL BE SOLELY RESPONSIBLE FOR ALL CONSTRUCTION MEANS, METHODS, PROCEDURES AND SEQUENCES AS PER STANDARD BEST PRACTICES.

1.5 DO NOT SCALE DRAWINGS.

1.6 USE ONLY THOSE MARKED "ISSUED FOR CONSTRUCTION".

1.7 THE CONTRACTOR SHALL REVIEW THESE DESIGN DOCUMENTS AND REPORT ANY CONFLICTS OR OMISSIONS TO THE VORTEX IMMEDIATELY.

1.8 TEMPORARY SUPPORTS, WHICH WILL BE REQUIRED DURING CONSTRUCTION, SUCH AS FORMWORK, BRACING, SHORING, ETC. ARE NOT SHOWN ON THESE DRAWINGS AND ARE THERESPONSIBILITY OF THE CONTRACTOR. THE CONTRACTOR IS RESPONSIBLE TO ENSURE THAT ALL SAFE CONSTRUCTION PROCEDURES ARE FOLLOWED.

1.9 THE FOLLOWING SPECIFICATIONS ARE VORTEX'S MINIMUM RECOMMENDATIONS TO OBTAIN A QUALITY PRODUCT. THE CONTRACTOR SHALL FOLLOW THE LOCAL CODES IF MORE RESTRICTIVE.

1.10 ALL SEEFLOW COMPONENTS TO BE SNUG-TIGHT ONLY. USING POWER TOOLS OR TIGHTEN HARDWARE FULLY-TENSIONED CAN PRODUCE CRACKING ON THE PLASTIC.

2 EXCAVATION

2.1 ANY SHORING OR TEMPORARY SHORING NOT SHOWN ON DRAWINGS WILL BE EXECUTED, IN A SAFE MANNER, BY THE GENERAL CONTRACTOR.

2.2 IT IS THE RESPONSIBILITY OF OTHERS TO VERIFY THE EXISTENCE OF ANY UNDERGROUND SERVICES ETC.

2.3 IF AVAILABLE, REFER TO SOIL REPORT FOR BACKFILL REQUIREMENTS. ALL BACKFILL (FOR SLAB ON GRADE, ETC.) MUST BE DONE IN ACCORDANCE WITH THE RECOMMENDATIONS OF AQUALIFIED PROFESSIONAL. USE ONLY FREE DRAINING, GRANULAR, MINERAL, INERT AND NON- REACTIVE FILL.

3 FOUNDATIONS

3.1 REFER TO SOIL REPORT FOR RECOMMENDATIONS.

3.2 ALL FOOTINGS SHALL REST ON A HOMOGENEOUS LAYER OF UNDISTURBED SOIL OR ENGINEERED BACKFILL WITH A MINIMUM ALLOWABLE BEARING CAPACITY OF 100KPA (2000 PSF) AND MAXIMUM DIFFERENTIAL SETTLEMENT OF 0.75" (19mm). ALL ORGANIC MATERIAL SHALL BE REMOVED.

3.3 IT IS THE CONTRACTOR'S RESPONSIBILITY TO ENSURE THAT THE SOIL AT ALL FOOTING LOCATIONS BE VERIFIED BY A QUALIFIED SOILS EXPERT BEFORE POURING FOOTINGS TO ENSUREFOOTINGS REST ON APPROPRIATE STRATA.

3.4 WHEN APPLICABLE, FOLLOW GEOTECHNICAL EXPERT RECOMMENDATIONS FOR ALL EXTERIOR FOOTINGS TO ENSURE FROST PROTECTION.

4 CONCRETE

4.1 ALL CONCRETE MATERIALS, PROCEDURES, TOLERANCES & WORKMANSHIP SHALL CONFORM TO THE LATEST ISSUES OF ACI-318 AND ACI 317 OR ACNOR CAN3-A23.1 & A23.2, DEPENDING ON PROJECT LOCATION.

4.2 CONCRETE THAT HAS BEEN IN THE TRUCKS LONGER THAN 2 HOURS SHALL BE REJECTED. DO NOT ADD WATER TO THE CONCRETE IN THE TRUCKS OR ON THE SITE UNDER ANY CIRCUMSTANCES.

4.3 USE MAXIMUM 76mm (3") SLUMP, 19 MM (3/4") AGGREGATE, UNLESS OTHERWISE-NOTED. USE 5-7% AIR ENTRAINMENT FOR CONCRETE EXPOSED TO WEATHER ONLY.

4.4 ALL GROUT SHALL BE NON-SHRINK TYPE WITH A MINIMUM 28 DAYS STRENGTH OF 5000 PSI (35.0 MPa). USE 1" (25mm) GROUT UNDER ALL STEEL COLUMN BASE PLATES.

4.5 CONCRETE STRENGTH @ 28 DAYS TO BE:

4.5.1 FOUNDATIONS (FOOTINGS): 25.0 MPa (3500 PSI), UNLESS OTHERWISENOTED.

4.5.2 INTERIOR SLAB ON GRADE: 25.0 MPa (3500 PSI), UNLESS OTHERWISE NOTED.

4.5.3 EXTERIOR SLAB ON GRADE: 28.0 MPa (4000 PSI), UNLESS OTHERWISE NOTED.

4.6 MINIMAL RE-BAR COVER:

4.6.1 CONCRETE POURED ON-GRADE = 76mm (3") COVER

4.6.2 CONCRETE POURED INTO FORMWORK BUT EXPOSED TO SOIL AND WEATHER FOR REBAR 10M (#3) AND UNDER = 50mm (2") COVER

5 REINFORCING STEEL

5.1 DEPENDING ON PROJECT LOCATION, ALL REINFORCING STEEL SHALL CONFORM TO ASTM A615 (BARS 15m (#4) TO BE GRADE 60 WITH SUPPLEMENTARY REQUIREMENTS ON S1. BARS SMALLER THAN 15M (#4), TO BE GRADE 40); OR TO ACNOR GRADE G30.12 [FY = 400MPA (60,000 PSI), UNLESS OTHERWISE NOTED].

5.2 USE CONCRETE, PLASTIC OR STEEL SUPPORT BARS, AS PER ACI (MANUAL OF STANDARD PRACTICE FOR DETAILING CONCRETE STRUCTURES). THE RE-BAR PLACER MUST REMAIN ON-SITE DURING POURS TO VERIFY CORRECT POSITIONING OF RE-BARS. SLANT UPPER REINFORCING STEEL IN LINE WITH THE SLOPE OF THE SLAB, IF APPLICABLE.

5.3 BARS SHALL BE SECURELY WIRED PER LATEST EDITION OF CRSI (RECOMMENDED PRACTICE FOR PLACING REINFORCING BARS).

5.4 ALL REINFORCING STEEL IS TO BE KEPT CLEAN AND FREE OF MUD, SNOW, ICE, AND ANY CONTAMINANTS.

5.5 VERTICAL AND CONTINUOUS REBAR SHALL BE LAPPED TO DEVELOP FULL TENSILE CAPACITY OF THE BAR. FOR 15m (#4) BARS MINIMUM LAP OF 610mm (24").

6 EXTERIOR / INTERIOR SLAB ON GRADE

6.1 FOLLOW THE GEOTECHNICAL EXPERT RECOMMENDATIONS FOR PREPARATION OF SOIL BEFORE POURING THE CONCRETE. ALL GRANULAR MATERIAL SHALL BE MOISTENED IMMEDIATELY BEFORE POURING THE CONCRETE. WATER AS NEEDED. DO NOT USE A VAPOR BARRIER.

6.2 NO TRUCKS ARE PERMITTED ON THE CONSTRUCTION SITE (OF THE SLAB) AFTER THE FINAL COMPACTION, EITHER BEFORE OR DURING, THE POUR.

6.3 SLAB TO BE MINIMUM 6" THICK, REINFORCED WITH 10m (#3) @ 300mm (12") C/C REBAR PLACED IN BOTH DIRECTIONS AT MID-HEIGHT OF THE SLAB, UNLESS OTHERWISE NOTED ON PLANS.FOR ELEVATION/PLAYNUK REQUIREMENT OF THICKENED SLAB, REFER TO ELEVATION INSTALLATION PACKAGE FOR DETAILS.

6.4 REFER TO CONCRETE SECTION FOR MINIMUM COMPRESSIVE STRENGTH AND AIR-ENTRAINMENT REQUIREMENTS.

6.5 FINISHING WILL BE MEDIUM BROOM.

6.6 CONTROL JOINTS (SAW-CUTS) TO BE LOCATED IN EACH DIRECTION, AT REGULAR INTERVALS, WITH A MAXIMUM DISTANCE OF 3m (10'). SHALL BE MINIMUM 3mm (1/8") WIDE AND SHALL PENETRATE THE SLAB TO A MINIMUM DEPTH OF 1/3 OF THE THICKNESS OF THE SLAB. CONTROL JOINTS SHOULD BE DONE AS SOON AS POSSIBLE WITHOUT DAMAGING THE CONCRETE,BUT NO LATER THAN 18 HOURS AFTER POURING.

6.7 WHEN POSSIBLE AND TO AVOID SHRINKAGE CRACKING, HUMIDITY SHALL BE MAINTAINED FOR 7 DAYS DURING THE CURING PERIOD OF THE SLAB. WATER AND USE POLYETHYLENE CLOTH OR BAG. THE CONCRETE MUST DRY UNIFORMLY.

7 CONCRETE WORK IN COLD OR HOT WEATHER (MINIMUM REQUIREMENTS)

7.1 COLD WEATHER REQUIREMENTS APPLY WHEN THE MEAN AIR IS LESS THAN 5 DEGREES CELSIUS (40 DEGREES FAHRENHEIT).

7.2 GENERAL REQUIREMENTS FOR COLD WEATHER CONCRETE WORK SHALL BE AS PER ACI 306R-88; OR AS PER THE NBC'S LATEST REQUIREMENTS INCLUDING THE LATEST ISSUE OF CSA STANDARD CAN3-A23.1.

7.3 ALL SNOW AND ICE SHALL BE REMOVED FROM FORMS AND REBAR WITH STEAM AND COMPRESSED AIR BEFORE POURING. DO NOT USE DE-ICING SALT (CALCIUM CHLORIDE) OR ANY OTHER SALTS UNDER ANY CIRCUMSTANCES.

7.4 CONCRETE SHALL HAVE A MINIMUM TEMPERATURE OF 20 DEGREES CELSIUS AND A MAXIMUM TEMPERATURE OF 25 DEGREES CELSIUS WHILE POURING. IT IS THE CONTRACTOR'S RESPONSIBILITY TO ENSURE THAT THESE REQUIREMENTS ARE SATISFIED. ANY CONCRETE THAT DOES NOT CONFORM MUST BE REJECTED.

7.5 THE SURFACE OF POURED CONCRETE SHALL BE PROTECTED BY MEANS OF SUITABLE COVERINGS AND INSULATION (TO BE DETERMINED BY TEMPERATURE) DURING THE CURING PROCESS.

7.6 GENERAL REQUIREMENTS FOR HOT WEATHER CONCRETE WORK SHALL BE AS PER ACI 305R-99; OR AS PER LOCAL CODE REQUIREMENTS.

8 PIPING

8.1 WQMS AND WCS CONFIGURATION ARE SCHEMATIC AND MAY BE MOVED OR ADJUSTED ON SITE BY VORTEX CERTIFIED INSTALLER TO ADJUST FOR SITE CONDITIONS

8.2 ANY REQUIRED BACKFLOW DEVICE, WATER METER OR PRESSURE REGULATOR ON THE CITY WATER MAIN IS NOT PROVIDED BY VORTEX.

8.3 DISTANCE BETWEEN THE WQMS (PUMPS, MANIFOLD, ETC.) AND THE WATER CONTAINMENT SYSTEM (WCS) SHALL NOT EXCEED 40 FEET.

8.4 MAKEUP WATER LINE PRESSURE SHOULD NOT EXCEED 50 PSI AND/OR LOCAL CODE.

8.5 ALL PIPE LINES TO FEATURES TO HAVE 1% MINIMUM RECOMMENDED SLOPE FOR PROPER WINTERIZATION.

8.6 ALL LINE SIZING (FEATURE CONNECTION TABLE) ASSUMES A MAXIMUM DISTANCE OF 100 FEET BETWEEN THE WATER DISTRIBUTION MANIFOLD AND THE FURTHEST PLAY PRODUCT. DISTANCES ABOVE 100 FEET MAY REQUIRE AN INCREASE IN LINE SIZING. PLEASE CONTACT VORTEX.

8.7 THE LINE DIAMETER FROM DRAIN SHALL BE 6" BASED ON THE MAXIMUM APPROXIMATE FLOW AT 1% SLOPE. FINAL LOCATION OF DRAIN AND LINE ROUTING ARE TO BE DETERMINED BY OTHERS.

8.8 PRESSURE LINES ARE RECOMMENDED TO BE SCHEDULE 80 PVC OR PEX, AND NON-PRESSURE LINES TO BE SCHEDULE 40, UNLESS OTHERWISE REQUESTED BY LOCAL CODE.

8.9 DRAINAGE LINES ARE RECOMMENDED TO BE SDR 35, UNLESS OTHERWISE REQUESTED BY LOCAL CODE.

8.10 CHEMICAL FEED LINES SHALL NOT EXCEED 30 FEET. TUBING PROVIDED BY VORTEX AND INSTALLED BY OTHERS.

8.11 PIPING SHOULD BE INSPECTED AFTER TRANSPORTATION FOR CUTS, SCRATCHES, GOUGES OR SPLITS; DAMAGED SECTIONS MUST BE DISCARDED OR CUT OUT.

8.12 PIPE SHALL BE INSTALLED BELOW THE FROST LEVEL NOT LESS THAN 12" (ASTM F-645) UNLESS OTHERWISE REQUESTED BY LOCAL CODE.

8.13 PIPE INSTALLATION MINIMUM COVER SHOULD BE EVALUATED ACCORDING TO ASTM D-2774, UNLESS OTHERWISE REQUESTED BY LOCAL CODE.

8.14 SPECIAL CONSIDERATIONS SHOULD BE TAKEN FOR THERMAL CONDITIONS, EXPANSION AND CONTRACTIONS DUE TO TEMPERATURE SHOULD BE EVALUATED BEFORE THE INSTALLATION BY THE CONTRACTOR.

9 ELECTRICAL

9.1 WIRING FROM THE CONTROLLER TO EACH ACTIVATOR SHALL BE #22 AWG. A TOTAL OF FIVE (5) CONDUCTORS PER ACTIVATOR.

CABLE LENGTH UP TO 246' (75m), PROVIDED BY VORTEX.

9.2 ALL CONNECTIONS TO THE CONTROLLER AND OTHER VORTEX ELECTRICAL PANEL SHALL BE PERFORMED USING AN APPROVED NEMA 4X CONNECTOR.

9.3 WIRE FROM MAIN POWER TO VORTEX PANEL TO BE DETERMINED BY OTHERS RESPECTING THE LOCAL CODE.

9.4 MAINTAIN A MINIMUM CLEARANCE ZONE OF 36" (1m) FRONT OF ELECTRICAL PANEL, UNLESS OTHERWISE REQUESTED BY LOCAL CODE.

9.5 USE #8 BARE SOLID COPPER BONDING WIRE BETWEEN FEATURES TO A GROUNDING ROD IN THE SOIL, TIED INTO REBAR GRID, OR AS PER LOCAL CODE. SPRAYLINKS FEATURE DO NOT REQUIRE BONDING.
SEE ELEVATION INSTALLATION DRAWING FOR BONDING DETAILS (BY INSTALLER).

9.6 AS PER ELECTRICAL CONSTRUCTION AND SAFETY CODES: CONTROLLER AND ANY OTHER ELECTRICAL ENCLOSURES MUST BE HARD-WIRED TO A GROUND FAULT CIRCUIT INTERRUPTER (GFCI) FROM THE INPUT POWER SOURCE.

9.7 ALL ELECTRICAL WORK SHOULD BE PERFORMED BY A LICENCE ELECTRICIAN IN ACCORDANCE TO LOCAL ELECTRICAL CONSTRUCTION AND SAFETY CODES.

9.8 THE MAESTROPRO CONTROL PANEL IS POWERED THROUGH A MAESTROPRO POWER BOX.

9.9 THE POWER CABLE TO MAESTROPRO POWER BOX IS SUPPLIED BY INSTALLER.

9.10 THE MAESTROPRO CONTROL PANEL INTEGRATES 24 DIGITAL OUTPUTS WITH 24 VAC AND 12 DIGITAL INPUTS.

9.11 FOR REMOTE ACCESS ABILITY, A HARD CONNECTION TO AN EXISTING NETWORK IS REQUIRED USING A CAT 5 CABLE OR A CELLULAR NANO-SIM CARD WITH DATA-PLAN.

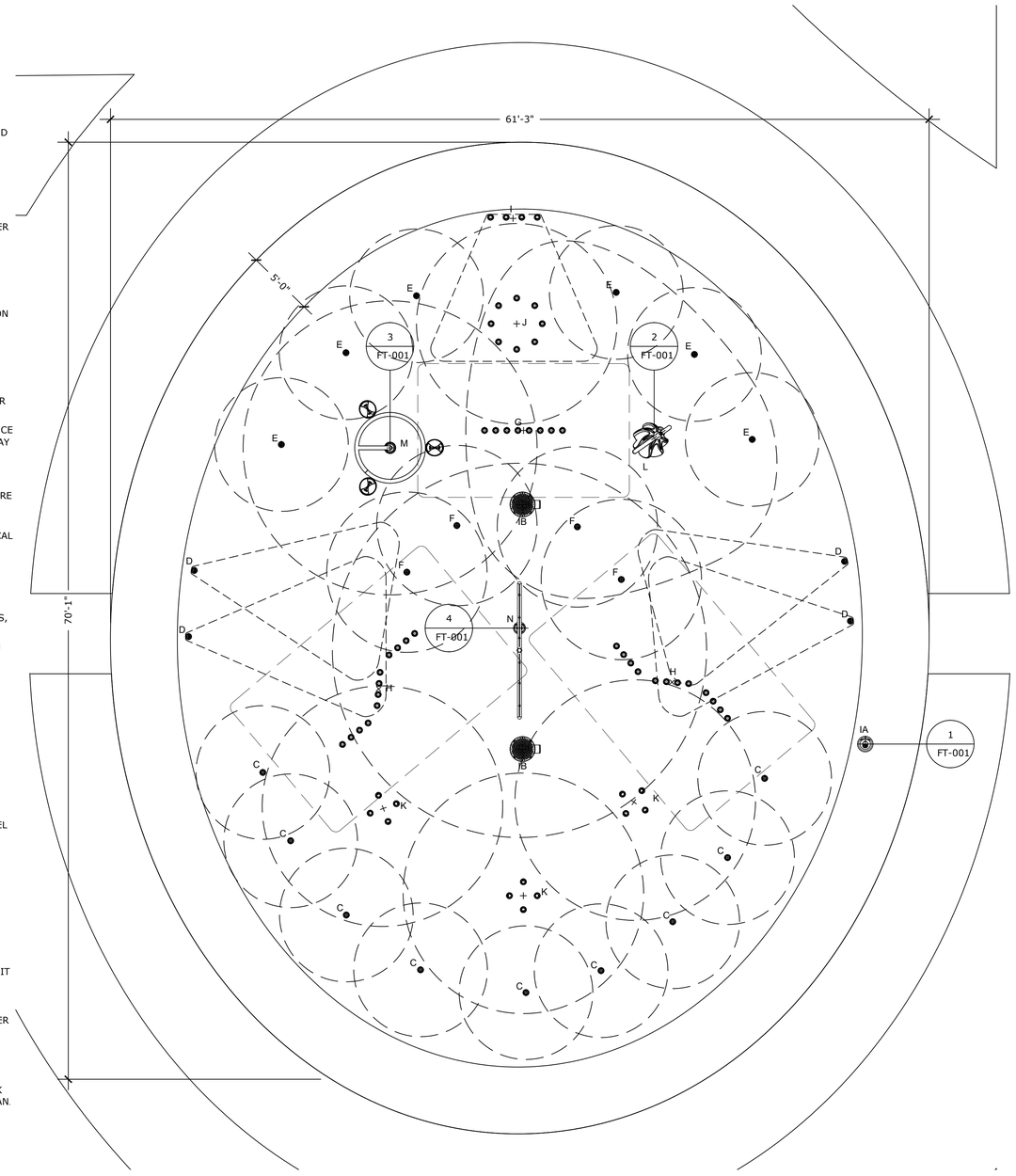

1 A-001 SPRAY ZONE & FEATURE PLAN

1. 5'[1.5M] SPRAY FREE AREA ALL AROUND THE SPLASHPAD
2. RECOMMENDED SLOPE: 1-2% TOWARDS DRAINAGE.
3. COORDINATE THESE DRAWINGS WITH ARCHITECTURAL , CIVIL, PLUMBING & ELECTRICAL SECTIONS.

Abbreviations	
A	Architectural
C	Civil Work
P	Plumbing Layout
PD	Plumbing Details
ED	Electrical Details
FT	Feature Drawings

SPLASHPAD DIMENSION

TOTAL AREA :	3569 ft²	332 m²
SPRAY AREA :	2582 ft²	240 m²
TOTAL FLOW:	267.5 GPM	

PRODUCT LEGEND

Ref	Product	Qty
IA	Activator N°3 VOR 0611	1
IB	Playsafe Drain N°4 VOR 1004	2
C	Spraylink Jet N°1 VOR 3000	9
D	Spraylink Fan VOR 3004	4
E	Spraylink Geyser VOR 3005	6
F	Spraylink Fountain VOR 3007	4
G	Spraylink Wall N°2 VOR 3051	1
H	Spraylink Zig-Zag VOR 3052	2
I	Spraylink Tunnel N°1 VOR 3054	1
J	Spraylink Cylinder VOR 3058	1
K	Spraylink Quad N°3 VOR 3064	3
L	Helio N°5 VOR 7240	1
M	Astra N°2 VOR 7698	1
N	Helico VOR 7790	1

Drawing #	Drawing Name	Rev #
A-001	Spray Zone Layout	00
A-002	Site Layout	02
A-003	Equipment Room Layout	02
A-004	Anchor Plan	00
C-001	Embed Details	00
C-002	Embed Details	00
P-001	Plumbing Layout	00
P-002	Plumbing Layout	00
PD-001	Plumbing Details	00
PD-002	Plumbing Details	00
PD-003	Plumbing Details	00
PD-004	Plumbing Details	00
ED-001	Electrical Details	00
FT-001	Feature Drawings	00

VORTEX
VORTEX AQUATIC STRUCTURES INTERNATIONAL

VORTEX USA Inc.
3500 South Dupont Highway,
Suite EP-101, Dover, Delaware
United States 19901
Phone: +1 (877) 586-7839

COPYRIGHT VORTEX USA Inc-THIS DOCUMENT AND THE IDEAS, RENDERINGS AND OTHER CONTENTS CONTAINED THEREIN ARE THE SOLE PROPETY OF VORTEX USA Inc AND MAY NOT BE DISSEMINATED, COPIED, REPRODUCED OR OTHERWISE USED WITHOUT PRIOR WRITTEN CONSENT OF VORTEX USA Inc.

El Dorado Park

Project Location
City of Lancaster, CA

Project Number
40371

Order Number
VE

Date	Revision Description	No.	By
18/Aug/2023	Issued for Permit	00	OD
COMPOSITE SET			9/24/25

Drawing Title
Spray Zone Layout

Drawn by: OD
Verified by: MAB
Scale: 3/16"=1'-0"
Date: 18/Aug/2023
Page #: A-001

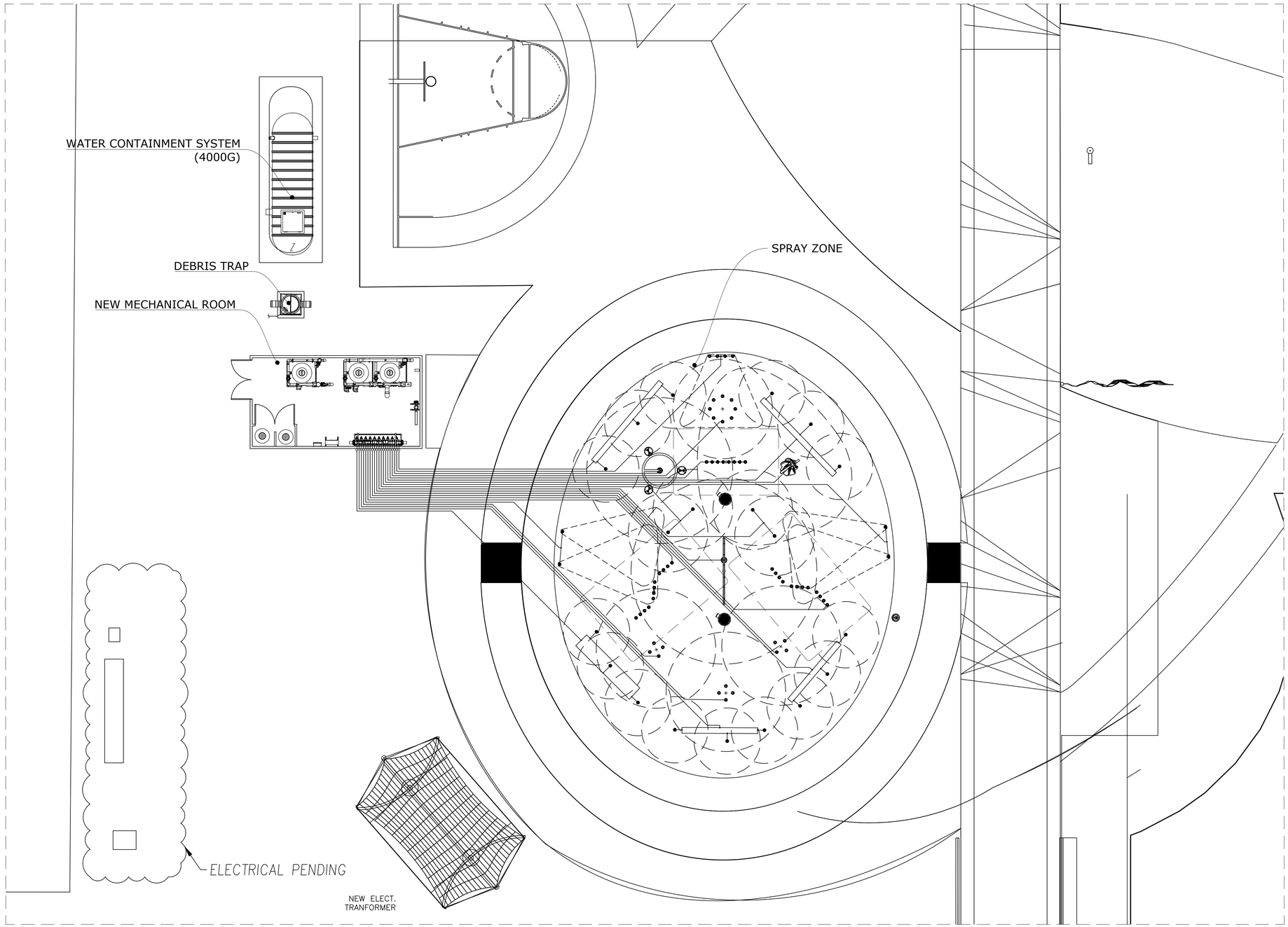

1
A-002
SITE LAYOUT

VORTEX
VORTEX AQUATIC STRUCTURES INTERNATIONAL

VORTEX USA Inc.
3500 South Dupont Highway,
Suite EP-101, Dover, Delaware
United States 19901
Phone: +1 (877) 586-7839

COPYRIGHT VORTEX USA Inc-THIS DOCUMENT AND THE IDEAS, RENDERINGS AND OTHER CONTENTS CONTAINED THEREIN ARE THE SOLE PROPETY OF VORTEX USA Inc AND MAY NOT BE DISSEMINATED, COPIED, REPRODUCED OR OTHERWISE USED WITHOUT PRIOR WRITTEN CONSENT OF VORTEX USA Inc.

El Dorado Park

Project Location
City of Lancaster, CA

Project Number
40371

Order Number
VE

COMPOSITE SET		9/24/25	
18/Aug/2023	Issued for Permit	02	OD
04/Aug/2023	Re-Issued for Approval	01	OD
15/May/2023	Issued for Approval	00	OD
Date	Revision Description	No.	By

Drawing Title
Site Layout

Drawn by
OD

Verified by
MAB

Scale
1/8"=1'-0"

Date
18/Aug/2023

Page #
A-002

Product Legend		
Product Ref.	Product	Qty
IC	Above ground Chemical Reservoir 50 Gallons VOR-44100.0000	2
ID1	MaestroPro Controller 24out/12in V0R-33923.4100	1
ID2	MaestroPro Expansion 24out/12in V0R-33923.4100	1
ID3, ID4	MaestroPro Power Box V0R-33923.4100	2
IE1	Single Loop Module Skid 1 VOR-33926.0174	1
IE2	Single Loop Module Skid 2 VOR-33926.0174	1
IF	Manifold Module VOR-33921.0190	1
IG2	Debris Trap Junction Box VOR-5322.0000	1
II1	Purify Module Reactor VOR-UVM-04	1
II2	Purify Module Controller VOR-UVM-04	1
II3	Flow Meter Ensure to Respect Minimum Straight Pipe Length of 42" (by Installer)	1
	1 1/2" Solenoid Valve VOR 33921.8000	20

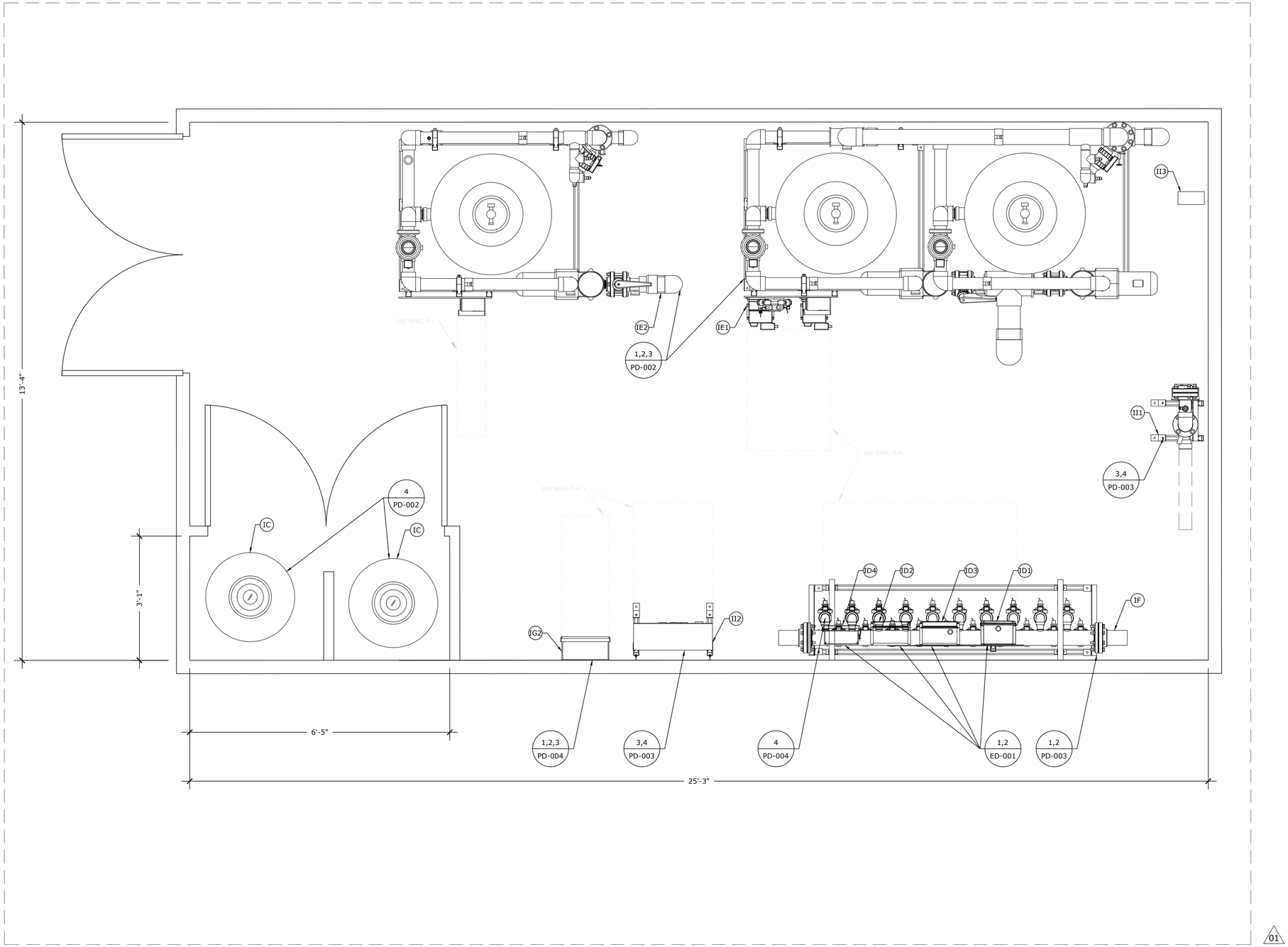

1 / A-003 EQUIPMENT ROOM LAYOUT

1. SEE SPECIFICATIONS ON A-001
2. NEW BUILDING WALL.

VORTEX
VORTEX AQUATIC STRUCTURES INTERNATIONAL

VORTEX USA Inc.
3500 South Dupont Highway,
Suite EP-101, Dover, Delaware
United States 19901
Phone: +1 (877) 586-7839

COPYRIGHT VORTEX USA Inc-THIS DOCUMENT AND THE IDEAS, RENDERINGS AND OTHER CONTENTS CONTAINED THEREIN ARE THE SOLE PROPETY OF VORTEX USA Inc AND MAY NOT BE DISSEMINATED, COPIED, REPRODUCED OR OTHERWISE USED WITHOUT PRIOR WRITTEN CONSENT OF VORTEX USA Inc.

EI Dorado Park

Project Location
City of Lancaster, CA

Project Number
40371

Order Number
VE

COMPOSITE SET			9/24/25
18/Aug/2023	Issued for Permit	02	OD
04/Aug/2023	Re-Issued for Approval	01	OD
15/May/2023	Issued for Approval	00	OD
Date	Revision Description	No.	By

Drawing Title
Equipment Room Layout

Drawn by	Verified by
OD	MAB
Scale: 3/4"=1'-0"	Date: 18/Aug/2023

Page #
A-003

Ref	Product	Qty
IA	Activator N°3 VOR 0611	1
IB	Playsafe Drain N°4 VOR 1004	2
C	Spraylink Jet N°1 VOR 3000	9
D	Spraylink Fan VOR 3004	4
E	Spraylink Geyser VOR 3005	6
F	Spraylink Fountain VOR 3007	4
G	Spraylink Wall N°2 VOR 3051	1
H	Spraylink Zig-Zag VOR 3052	2
I	Spraylink Tunnel N°1 VOR 3054	1
J	Spraylink Cylinder VOR 3058	1
K	Spraylink Quad N°3 VOR 3064	3
L	Helio N°5 VOR 7240	1
M	Astra N°2 VOR 7698	1
N	Helico VOR 7790	1

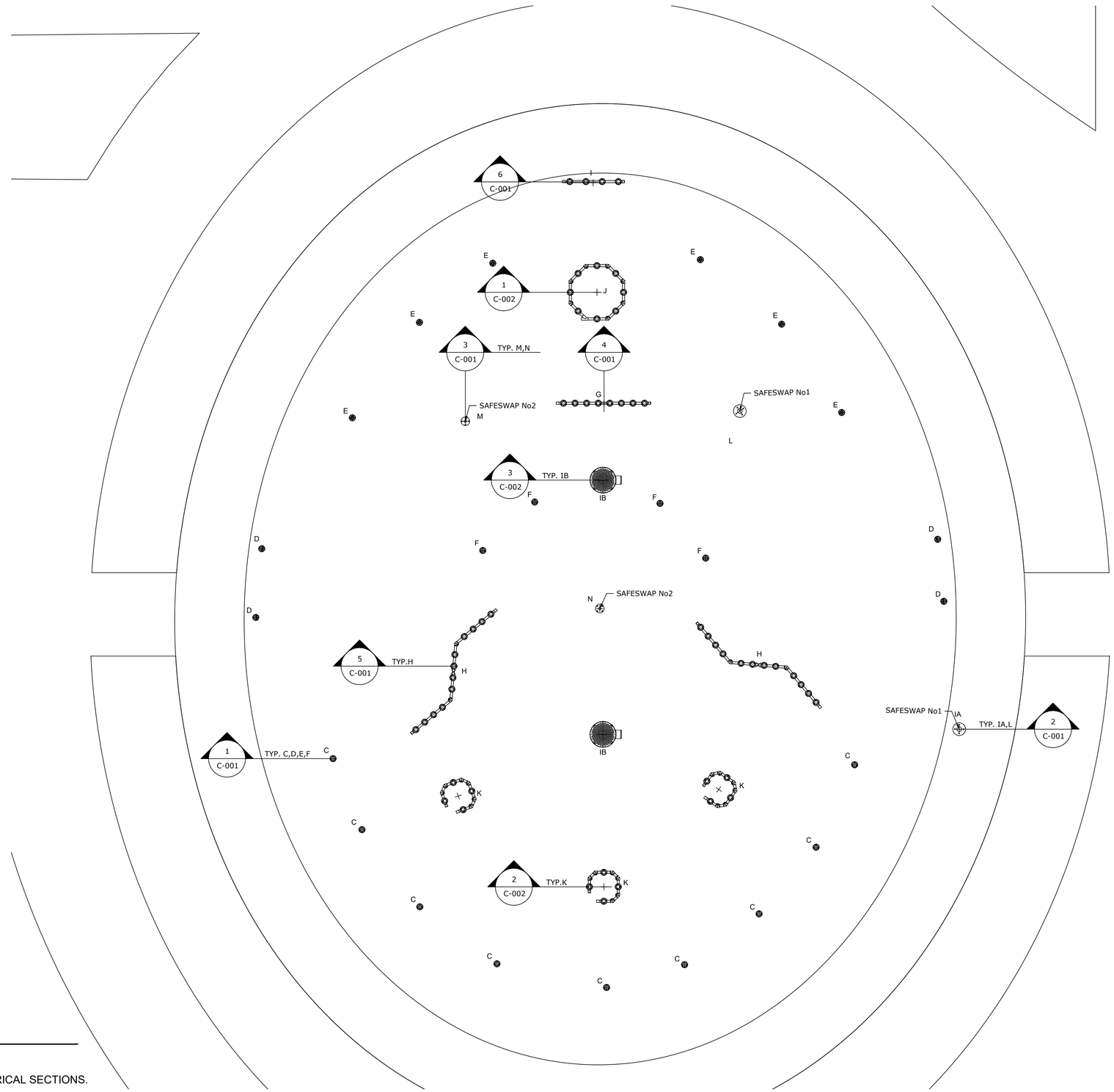

1 / A-004 ANCHOR PLAN

1. REFER TO SPECIFICATIONS ON A-001
2. COORDINATE THESE DRAWINGS WITH ARCHITECTURAL, CIVIL, PLUMBING & ELECTRICAL SECTIONS.

VORTEX
VORTEX AQUATIC STRUCTURES INTERNATIONAL

VORTEX USA Inc.
3500 South Dupont Highway,
Suite EP-101, Dover, Delaware
United States 19901
Phone: +1 (877) 586-7839

COPYRIGHT VORTEX USA Inc-THIS DOCUMENT AND THE IDEAS, RENDERINGS AND OTHER CONTENTS CONTAINED THEREIN ARE THE SOLE PROPETY OF VORTEX USA Inc AND MAY NOT BE DISSEMINATED, COPIED, REPRODUCED OR OTHERWISE USED WITHOUT PRIOR WRITTEN CONSENT OF VORTEX USA Inc.

El Dorado Park

Project Location
City of Lancaster, CA

Project Number
40371

Order Number
VE

Date	Revision Description	No.	By
COMPOSITE SET			9/24/25
18/Aug/2023	Issued for Permit	00	OD

Drawing Title
Anchor Plan

Drawn by	Verified by
OD	MAB
Scale: 1/4"=1'-0"	Date: 18/Aug/2023

Page #
A-004

NOTES:

1) "BY INSTALLER/BY CONTRACTOR" MAY REFER TO SERVICE PROVIDERS OTHER THAN THE EQUIPMENT MANUFACTURER. PLEASE REFER TO PROJECT SPECIFICATION FOR DETAILS OF RESPONSIBILITY.

2) POLYMER ENCAPSULATED ASSEMBLY NO EARTH GROUNDING AND NO BONDING RECOMMENDED FOR SPRAYLINK™ SYSTEM FOLLOW LOCAL CODE

3) REFER TO INSTALLATION GUIDE FOR MORE DETAILS.

4) AFTER CONCRETE POURING, INSTALL NOZZLES AND STAINLESS STEEL RINGS.

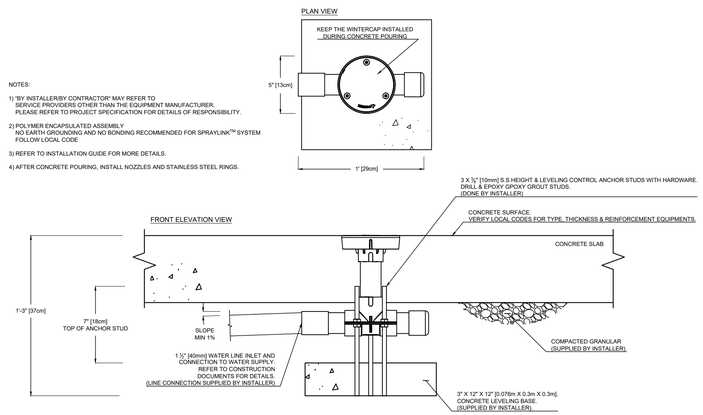

1 / C-001 Ground Feature Anchor (1 1/2" Inlet)

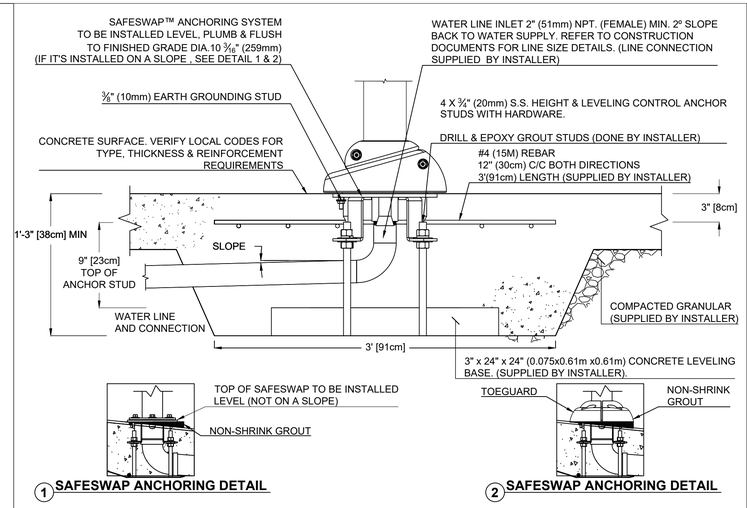

2 / C-001 Safeswap No. 1 Anchor TYP.

VOR-55000.0430

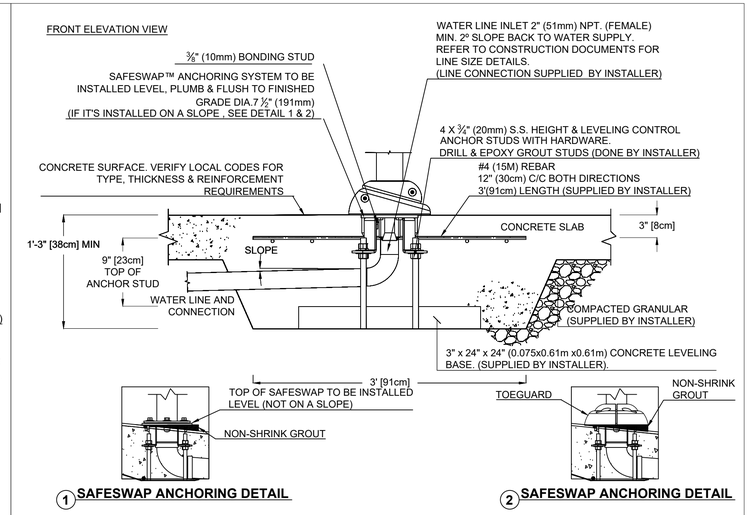

3 / C-001 Safeswap No. 2 Anchor TYP.

VOR-55000.0570

NOTES:

1) "BY INSTALLER/BY CONTRACTOR" MAY REFER TO SERVICE PROVIDERS OTHER THAN THE EQUIPMENT MANUFACTURER. PLEASE REFER TO PROJECT SPECIFICATION FOR DETAILS OF RESPONSIBILITY.
2) POLYMER ENCAPSULATED ASSEMBLY NO EARTH GROUNDING AND NO BONDING RECOMMENDED FOR SPRAYLINK™ SYSTEM. FOLLOW LOCAL CODE
3) REFER TO INSTALLATION GUIDE FOR MORE DETAILS.

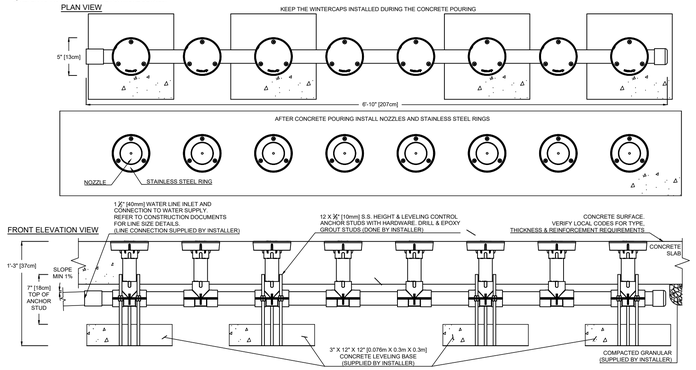

4 / C-001 Spraylink Wall No.2

VOR-3051

NOTES:

1) "BY INSTALLER/BY CONTRACTOR" MAY REFER TO SERVICE PROVIDERS OTHER THAN THE EQUIPMENT MANUFACTURER. PLEASE REFER TO PROJECT SPECIFICATION FOR DETAILS OF RESPONSIBILITY.
2) POLYMER ENCAPSULATED ASSEMBLY NO EARTH GROUNDING AND NO BONDING RECOMMENDED FOR SPRAYLINK™ SYSTEM. FOLLOW LOCAL CODE
3) REFER TO INSTALLATION GUIDE FOR MORE DETAILS.

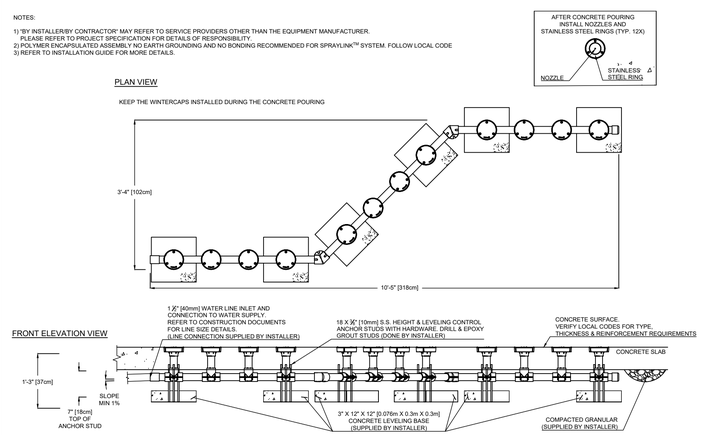

5 / C-001 Spraylink Zig-Zag

VOR-3052

NOTES:

1) "BY INSTALLER/BY CONTRACTOR" MAY REFER TO SERVICE PROVIDERS OTHER THAN THE EQUIPMENT MANUFACTURER. PLEASE REFER TO PROJECT SPECIFICATION FOR DETAILS OF RESPONSIBILITY.

2) POLYMER ENCAPSULATED ASSEMBLY NO EARTH GROUNDING AND NO BONDING RECOMMENDED FOR SPRAYLINK™ SYSTEM FOLLOW LOCAL CODE

3) REFER TO INSTALLATION GUIDE FOR MORE DETAILS.

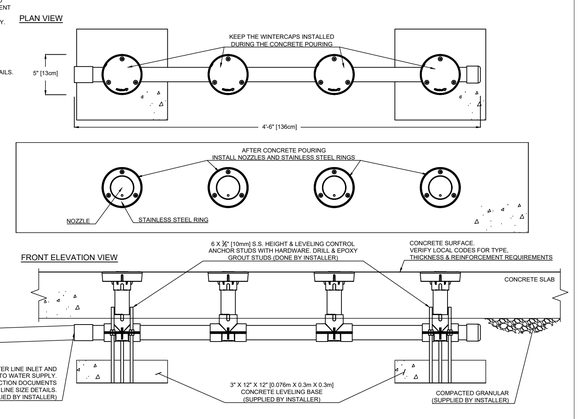

6 / C-001 Spraylink Tunnel No.1

VOR-3054

VORTEX
VORTEX AQUATIC STRUCTURES INTERNATIONAL

VORTEX USA Inc.
3500 South Dupont Highway,
Suite EP-101, Dover, Delaware
United States 19901
Phone: +1 (877) 586-7839

COPYRIGHT VORTEX USA Inc-THIS DOCUMENT AND THE IDEAS, RENDERINGS AND OTHER CONTENTS CONTAINED THEREIN ARE THE SOLE PROPETY OF VORTEX USA Inc AND MAY NOT BE DISSEMINATED, COPIED, REPRODUCED OR OTHERWISE USED WITHOUT PRIOR WRITTEN CONSENT OF VORTEX USA Inc.

El Dorado Park

Project Location
City of Lancaster, CA

Project Number
40371

Order Number
VE

Date	Revision Description	No.	By
COMPOSITE SET			9/24/25
18/Aug/2023	Issued for Permit	00	OD

Drawing Title
Embed Details

Drawn by	Verified by
OD	MAB
Scale: N.T.S	Date: 18/Aug/2023

Page #
C-001

NOTES:

1) "BY INSTALLER/BY CONTRACTOR" MAY REFER TO SERVICE PROVIDERS OTHER THAN THE EQUIPMENT MANUFACTURER. PLEASE REFER TO PROJECT SPECIFICATION FOR DETAILS OF RESPONSIBILITY.

2) POLYMER ENCAPSULATED ASSEMBLY NO EARTH GROUNDING AND NO BONDING RECOMMENDED FOR SPRAYLINK™ SYSTEM FOLLOW LOCAL CODE

3) REFER TO INSTALLATION GUIDE FOR MORE DETAILS.

4)AFTER CONCRETE POURING, INSTALL NOZZLES AND STAINLESS STEEL RINGS.

PLAN VIEW

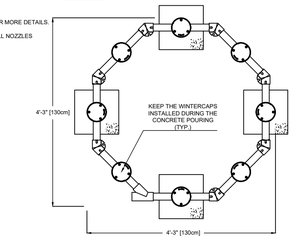

PLAN VIEW

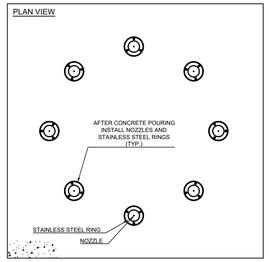

FRONT ELEVATION VIEW

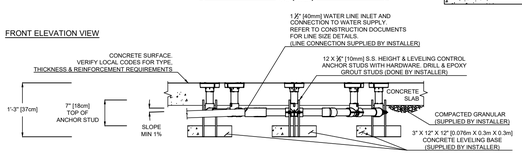

1 / C-002 Spraylink Cylinder
VOR-3058

NOTES:

1) "BY INSTALLER/BY CONTRACTOR" MAY REFER TO SERVICE PROVIDERS OTHER THAN THE EQUIPMENT MANUFACTURER. PLEASE REFER TO PROJECT SPECIFICATION FOR DETAILS OF RESPONSIBILITY.

2) POLYMER ENCAPSULATED ASSEMBLY NO EARTH GROUNDING AND NO BONDING RECOMMENDED FOR SPRAYLINK™ SYSTEM FOLLOW LOCAL CODE

3) REFER TO INSTALLATION GUIDE FOR MORE DETAILS.

PLAN VIEW

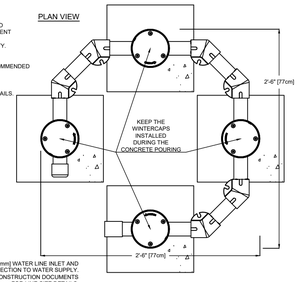

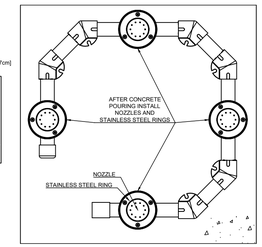

FRONT ELEVATION VIEW

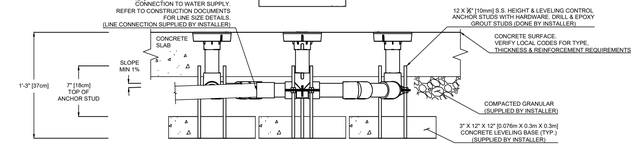

2 / C-002 Spraylink Quad No.3
VOR-3064

PLAN VIEW

Note:
1- Cover plate must be install during concrete pouring.

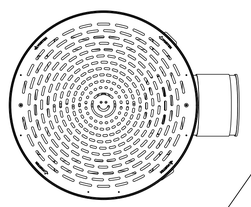

STRAINER BASKET
PART #: 33400.2100
STAINLESS STEEL 304 | THICKNESS: 14 GA
SQUARE OPENINGS: 0.15" (3.8mm)
(SOLD SEPARATELY)

3/8" (10mm) BONDING STUD

ADD SIKAFLEX MARINE GRADE SILICONE SEALANT ON THE OUTSIDE AND ON THE INSIDE:
- BETWEEN DRAINAGE BOX & SEAL
- BETWEEN SEAL & SUPPLIED 6" PIPE (LEAVE THE 6 " PIPE EXTENDED BY 1/2" FROM THE SEAL INSIDE THE DRAINAGE BOX)

ANCHORING SYSTEM TO BE INSTALLED LEVEL, PLUMB & FLUSH TO FINISHED GRADE(BY INSTALLER)

CONCRETE SURFACE. VERIFY LOCAL CODES FOR TYPE, THICKNESS & REINFORCEMENT REQUIREMENTS (BY INSTALLER)
VIBRATE WELL THE CONCRETE AROUND THE DRAIN

4 X 1/2" (13mm) S.S. HEIGHT & LEVELING CONTROL ANCHOR STUDS WITH HARDWARE.(BY VORTEX) DRILL & EPOXY GROUT STUDS (DONE BY INSTALLER)

FRONT ELEVATION VIEW

WATER LINE OUTLET 6" (152mm). MIN. 1% SLOPE. (LINE CONNECTION SUPPLIED BY INSTALLER)

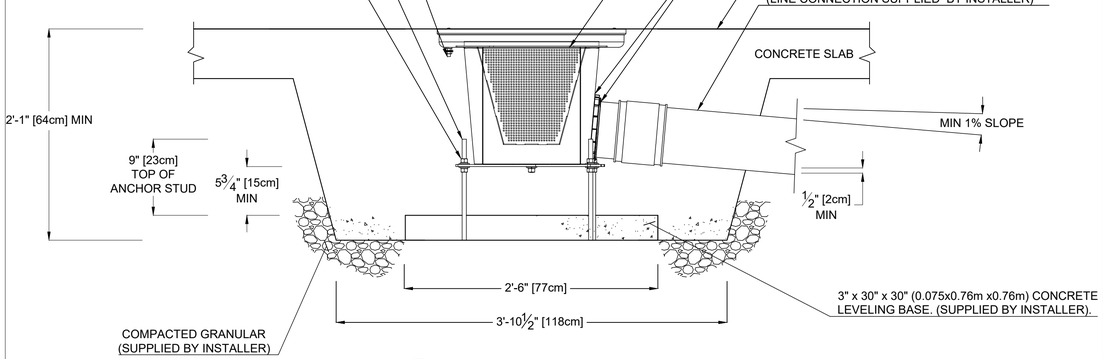

3 / C-002 Drain Playsafe, No. 4
VOR-1004.4000

VORTEX
VORTEX AQUATIC STRUCTURES INTERNATIONAL

VORTEX USA Inc.
3500 South Dupont Highway,
Suite EP-101, Dover, Delaware
United States 19901
Phone: +1 (877) 586-7839

COPYRIGHT VORTEX USA Inc-THIS DOCUMENT AND THE IDEAS, RENDERINGS AND OTHER CONTENTS CONTAINED THEREIN ARE THE SOLE PROPETY OF VORTEX USA Inc AND MAY NOT BE DISSEMINATED, COPIED, REPRODUCED OR OTHERWISE USED WITHOUT PRIOR WRITTEN CONSENT OF VORTEX USA Inc.

El Dorado Park

Project Location
City of Lancaster, CA

Project Number
40371

Order Number
VE

Date	Revision Description	No.	By
COMPOSITE SET			9/24/25
18/Aug/2023	Issued for Permit	00	OD

Drawing Title
Embed Details

Drawn by	Verified by
OD	MAB
Scale: N.T.S	Date: 18/Aug/2023

Page #
C-002

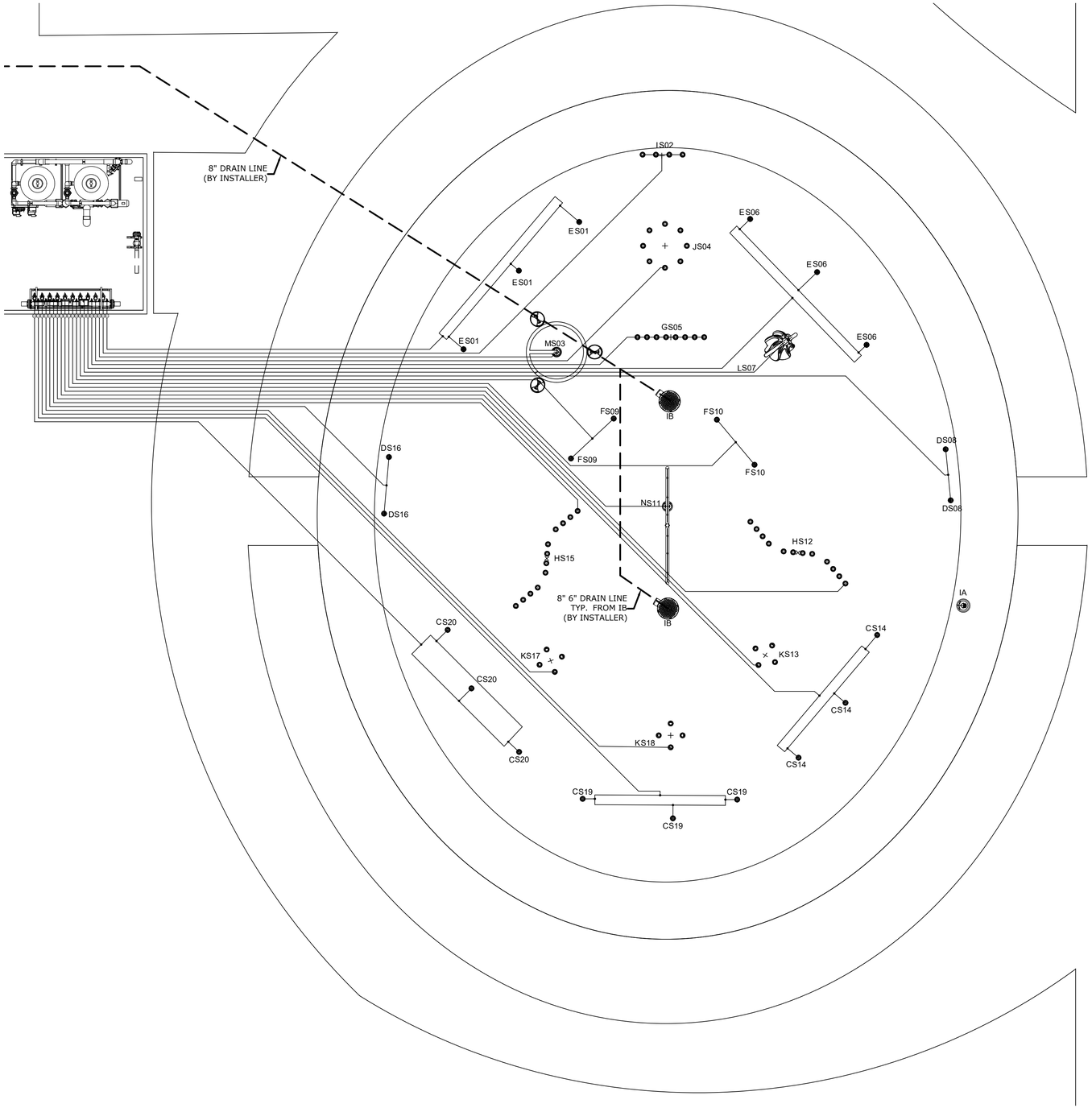

1
P-001

PLUMBING LAYOUT

1. REFER TO SPECIFICATIONS ON A-001
2. COORDINATE THESE DRAWINGS WITH ARCHITECTURAL, CIVIL, PLUMBING & ELECTRICAL SECTIONS.

WATER LINE ————————
DRAIN LINE - - - - - - - - - - -

Feature Connection Table

Manifold Output Ref.	Solenoid Valve	Feature Ref.	Feature	Qty	Line Size	Gpm
S01	1 1/2" Std	E	Spraylink Geyser VOR 3005	3	1 1/2"	15
S02	1 1/2" Std	I	Spraylink Tunnel N°1 VOR 3054	1	1 1/2"	4
S03	1 1/2" Std	M	Astra N°2 VOR 7698	1	1 1/2"	7.5
S04	1 1/2" Std	J	Spraylink Cylinder VOR 3058	1	1 1/2"	19
S05	1 1/2" Std	G	Spraylink Wall N°2 VOR 3051	1	1 1/2"	19
S06	1 1/2" Std	E	Spraylink Geyser VOR 3005	3	1 1/2"	15
S07	1 1/2" Std	L	Helio N°5 VOR 7240	1	1 1/2"	14
S08	1 1/2" Std	D	Spraylink Fan VOR 3004	2	1 1/2"	14
S09	1 1/2" Std	F	Spraylink Fountain VOR 3007	2	1 1/2"	12
S10	1 1/2" Std	F	Spraylink Fountain VOR 3007	2	1 1/2"	12
S11	1 1/2" Std	N	Helico VOR 7790	1	1 1/2"	17
S12	1 1/2" Std	H	Spraylink Zig-Zag VOR 3052	1	1 1/2"	28.5
S13	1 1/2" Std	K	Spraylink Quad N°3 VOR 3064	1	1 1/2"	8.5
S14	1 1/2" Std	C	Spraylink Jet N°1 VOR 3000	3	1 1/2"	7.5
S15	1 1/2" Std	H	Spraylink Zig-Zag VOR 3052	1	1 1/2"	28.5
S16	1 1/2" Std	D	Spraylink Fan VOR 3004	2	1 1/2"	14
S17	1 1/2" Std	K	Spraylink Quad N°3 VOR 3064	1	1 1/2"	8.5
S18	1 1/2" Std	K	Spraylink Quad N°3 VOR 3064	1	1 1/2"	8.5
S19	1 1/2" Std	C	Spraylink Jet N°1 VOR 3000	3	1 1/2"	7.5
S20	1 1/2" Std	C	Spraylink Jet N°1 VOR 3000	3	1 1/2"	7.5

VORTEX
VORTEX AQUATIC STRUCTURES INTERNATIONAL

VORTEX USA Inc.
3500 South Dupont Highway,
Suite EP-101, Dover, Delaware
United States 19901
Phone: +1 (877) 586-7839

COPYRIGHT VORTEX USA Inc-THIS DOCUMENT AND THE IDEAS, RENDERINGS AND OTHER CONTENTS CONTAINED THEREIN ARE THE SOLE PROPETY OF VORTEX USA Inc AND MAY NOT BE DISSEMINATED, COPIED, REPRODUCED OR OTHERWISE USED WITHOUT PRIOR WRITTEN CONSENT OF VORTEX USA Inc.

El Dorado Park

Project Location
City of Lancaster, CA

Project Number
40371

Order Number
VE

Date	Revision Description	No.	By
COMPOSITE SET			9/24/25
18/Aug/2023	Issued for Permit	00	OD

Drawing Title
Plumbing Layout

Drawn by	Verified by
OD	MAB
Scale 3/16"=1'-0"	Date 18/Aug/2023

Page #
P-001

Product Connection Table						
Product Ref (Start Point)	Product	Product Connection Ref. (Connection Size)	Product Ref. (Termination Point)	Product	Product Connection Ref. (Connection Size)	Line Ref. (Size)
IH-H2	Water Containment System (4000G) VOR-5313.0022	Filtration Pump Suction (6" Slip M.ASTM)	LR1-TEE	N/A	By other	LR1 (6")
LR1-TEE	N/A	By other	IE1	Single Loop Module Skid 1 VOR-33926.0174	Influent (6" Slip M.ASTM)	LR1-1 (6")
LR1-TEE	N/A	By other	IE2	Single Loop Module Skid 2 VOR-33926.0174	Influent (4" Slip F.ASTM)	LR1-2 (4")
IE2	Single Loop Module Skid 2 VOR-33926.0174	Effluent (3" Slip M.ASTM)	IE1	Single Loop Module Skid 1 VOR-33926.0174	Influent (3" Slip M.ASTM)	LR2 (3")
IE1	Single Loop Module Skid 1 VOR-33926.0174	Effluent (6" Slip F.ASTM)	II1	Purify Module Reactor VOR-UVM-04	Influent (6" Slip F.ASTM)	LR3-1 (6")
II1	Purify Module Reactor VOR-UVM-04	Effluent (6" Slip F.ASTM)	IE1	Single Loop Module Skid 1 VOR-33926.0174	Influent (6" Slip M.ASTM)	LR3-2 (6")
IE1	Single Loop Module Skid 1 VOR-33926.0174	Effluent (6" Slip M.ASTM)	LR4-TEE	N/A	By other	LR4 (6")
LR4-TEE	N/A	By other	IF	Manifold Module VOR-33921.0180	Influent (4" Slip M.ASTM)	LR4-1 (4")
LR4-TEE	N/A	By other	IF	Manifold Module VOR-33921.0180	Influent (4" Slip M.ASTM)	LR4-2 (4")
IE1	Single Loop Module Skid 1 VOR-33926.0174	Effluent (4" Slip F.ASTM)	IH-H3	Water Containment System (4000G) VOR-5313.0022	Filter Return (3" FNPT)	LR5 (4")
IG1	Debris Trap VOR-5322.0000	Slip Connection (10")	IH-H1	Water Containment System (4000G) VOR-5313.0022	Main Drain Return (10" Slip M.ASTM)	LR6 (10")
N/A	City Water Line	---------	IH-H6	Water Containment System (4000G) VOR-5313.0022	Fresh Water (1" FNPT)	LR7 (1")
IH-H7	Water Containment System (4000G) VOR-5313.0022	Overflow (4" FNPT)	To Sanitary	---------	N/A	LR8 (4")
IE1	Single Loop Module Skid 1 VOR-33926.0174	Effluent (3" Slip F.ASTM)	To Sanitary	---------	N/A	LR9 (3")X2
IE2	Single Loop Module Skid 2 VOR-33926.0174	Effluent (3" Slip F.ASTM)				LR10 (3")

Product Legend		
Product Ref.	Product	Qty
IC	Above ground Chemical Reservoir 50 Gallons VOR-44100.0000	2
II3	Flow Meter Ensure to Respect Minimum Straight Pipe Length of 42" (by Installer)	1

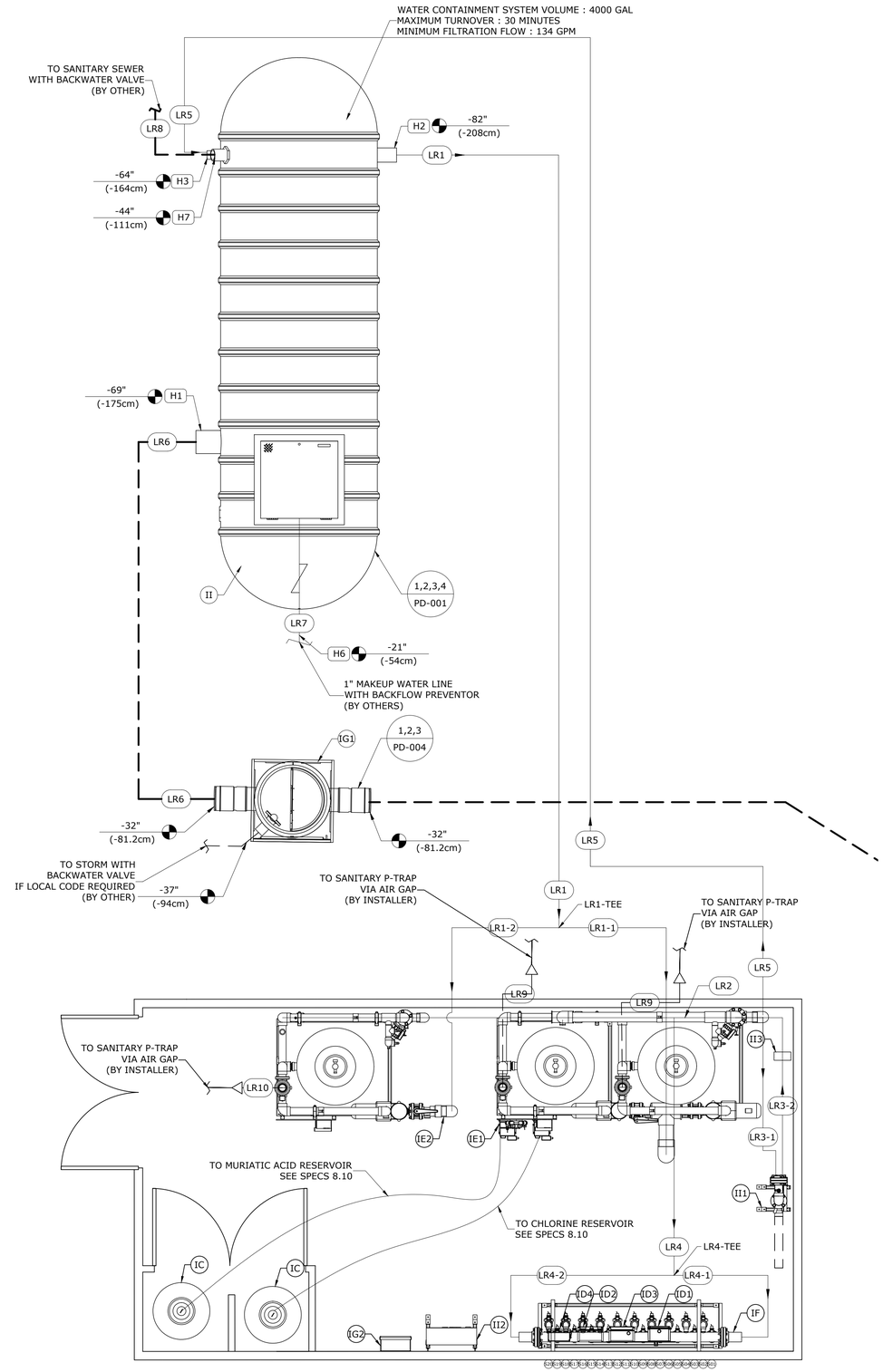

1 / P-002 PLUMBING LAYOUT

1. REFER TO SPECIFICATIONS ON A-001
2. COORDINATE THESE DRAWINGS WITH ARCHITECTURAL, CIVIL, PLUMBING & ELECTRICAL SECTIONS.

WATER LINE ————————

DRAIN LINE — — — — — —

VORTEX
VORTEX AQUATIC STRUCTURES INTERNATIONAL

VORTEX USA Inc.
3500 South Dupont Highway,
Suite EP-101, Dover, Delaware
United States 19901
Phone: +1 (877) 586-7839

COPYRIGHT VORTEX USA Inc-THIS DOCUMENT AND THE IDEAS, RENDERINGS AND OTHER CONTENTS CONTAINED THEREIN ARE THE SOLE PROPETY OF VORTEX USA Inc AND MAY NOT BE DISSEMINATED, COPIED, REPRODUCED OR OTHERWISE USED WITHOUT PRIOR WRITTEN CONSENT OF VORTEX USA Inc.

El Dorado Park

Project Location
City of Lancaster, CA

Project Number
40371

Order Number
VE

Date	Revision Description	No.	By
COMPOSITE SET			9/24/25
18/Aug/2023	Issued for Permit	00	MS

Drawing Title
Plumbing Layout

Drawn by: MS
Verified by: MAB
Scale: 3/8"=1'-0"
Date: 18/Aug/2023
Page #: P-002

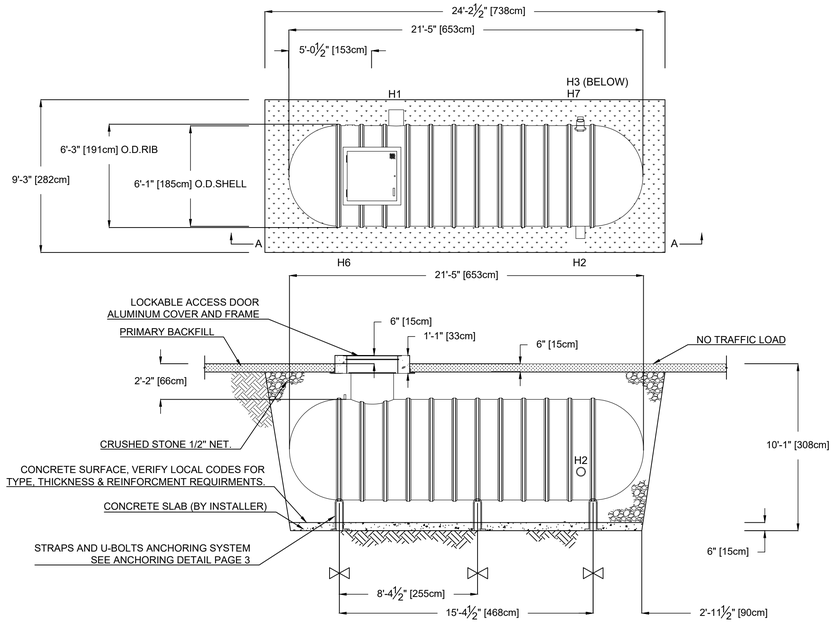

1 PD-001 Water Containment System 4000G
VOR-5313.0022R01

LINE	DESCRIPTION	SIZE	HEIGHT FROM C/L
H 1	MAIN DRAIN RETURN	10"	-1"
H 2	CIRCULATION PUMP SUCTION OUTLET	6"	-16"
H 3	FILTER RETURN	3"	0
H 6	FRESH WATER INLET	1"	40"
H 7	OVERFLOW OUTLET	4"	14"

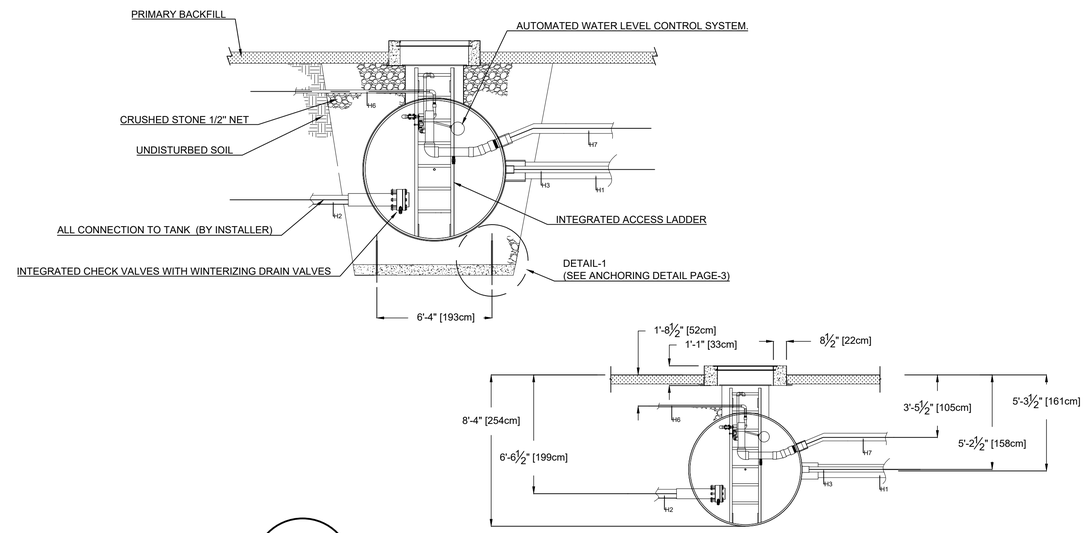

2 PD-001 Water Containment System 4000G
VOR-5313.0022R01

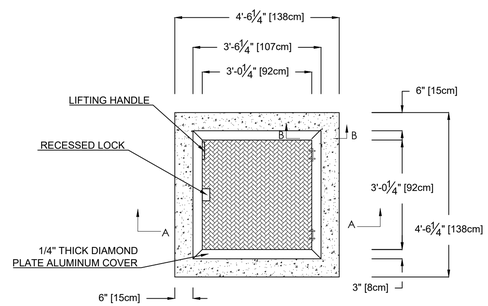

PLAN VIEW

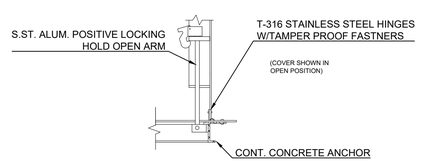

SECTION B-B

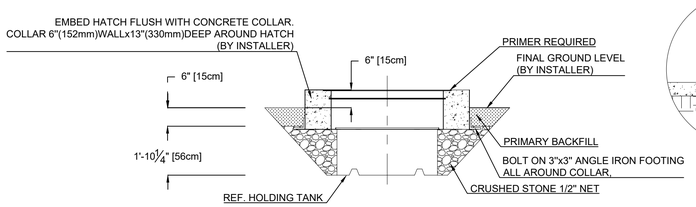

SECTION A-A

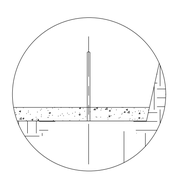

DETAIL 1

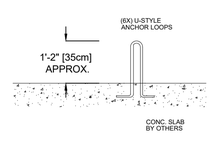

ANCHORING DETAILS

3 PD-001 Water Containment System 4000G
VOR-5313.0022R01

VOR-5313.0022R01 WATER CONTAINMENT SYSTEM - 4000 Gallon

The 4000-gallon tank shall be a pre-fabricated unit designed to safely store the water used for the facility. The tank shall be pre-assembled at the factory and shall include the following connections: one 10" inlet for main drain, one 6" suction output for circulation pump, one 3" connection for filtration return, one 1" connection for freshwater and one 4" connection for overflow/discharge. The tank shall also include a water level detection system and one access hatch with ladder. It shall have the following characteristics:

Tank
- 4000 gallon capacity
- Fiberglass
- Single wall
- Ø 75", ~257" long

Anchor
- Anchoring straps with hardware
- U-bolt type embedded in concrete

Access hatch
- Aluminum access hatch
- Hinged and pad-locked, with aluminum frame and SS hardware
- Fiberglass ladder included

Level control
- Float valve connected to make up water line
- Polypropylene anti corrosion valve
- Inlet size 1", outlet size 1"
- Maximum working pressure 50 psi

Inlets
- 10" inlet for main drain
- 3" inlet for filtration return
- 1" connection for freshwater

Outlets
- 6" output for circulation pump
- 4" connection for overflow / discharge

4 PD-001 Water Containment System 4000G
VOR-5313.0022R01

VORTEX
VORTEX AQUATIC STRUCTURES INTERNATIONAL
VORTEX USA Inc.
3500 South Dupont Highway,
Suite EP-101, Dover, Delaware
United States 19901
Phone: +1 (877) 586-7839

COPYRIGHT VORTEX USA Inc-THIS DOCUMENT AND THE IDEAS, RENDERINGS AND OTHER CONTENTS CONTAINED THEREIN ARE THE SOLE PROPETY OF VORTEX USA Inc AND MAY NOT BE DISSEMINATED, COPIED, REPRODUCED OR OTHERWISE USED WITHOUT PRIOR WRITTEN CONSENT OF VORTEX USA Inc.

El Dorado Park

Project Location
City of Lancaster, CA

Project Number
40371

Order Number
VE

Date	Revision Description	No.	By
COMPOSITE SET			9/24/25
18/Aug/2023	Issued for Permit	00	OD

Drawing Title
Plumbing Details

Drawn by: OD
Verified by: MAB
Scale: N.T.S
Date: 18/Aug/2023
Page #: PD-001

NOTE:

A) BY INSTALLER/BY CONTRACTOR MAY REFER TO SERVICE PROVIDERS OTHER THAN THE EQUIPMENT MANUFACTURER. PLEASE REFER TO PROJECT SPECIFICATION FOR DETAILS OF RESPONSIBILITY.
B) VERIFY LOCAL CODES FOR MINIMUM ACCESS DIMENSIONS AROUND ELECTRICAL ENCLOSURES.
D) DIMENSIONS ARE APPROXIMATE AND SUBJECT TO CHANGE WITHOUT NOTICE.
E) PIPE LOCATIONS ARE APPROXIMATE AND SUBJECT TO CHANGE WITHOUT NOTICE.
F) DIRECTION OF FLOW FOR PLUMBING SHALL BE LABELED USING DIRECTIONAL SYMBOLS.
G) VALVES AND PLUMBING LINES SHALL BE LABELED WITH DESCRIPTION OF SOURCE OR DESTINATION.

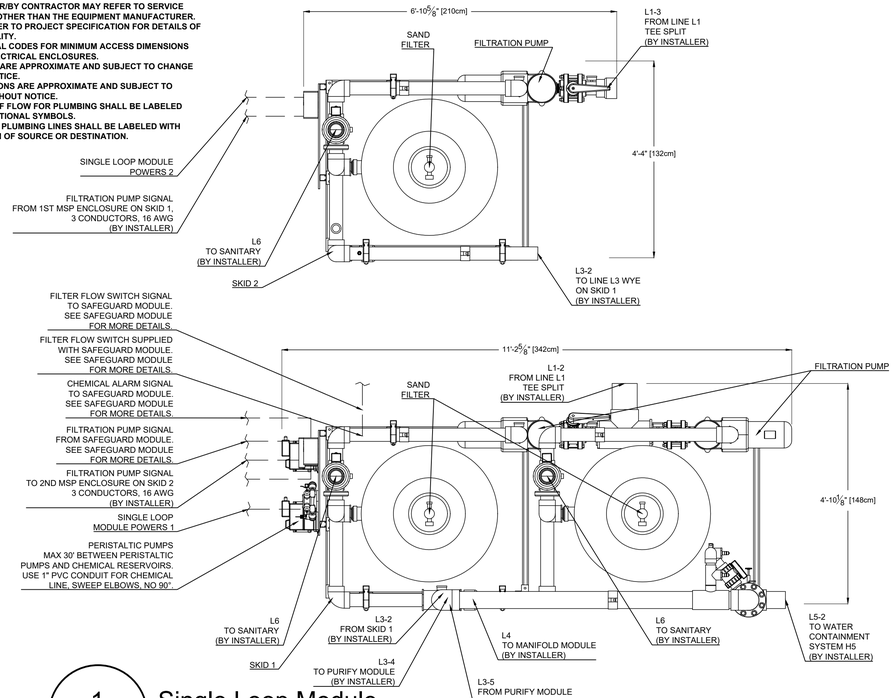

1 / PD-002 **Single Loop Module**
VOR-33926.0174R02

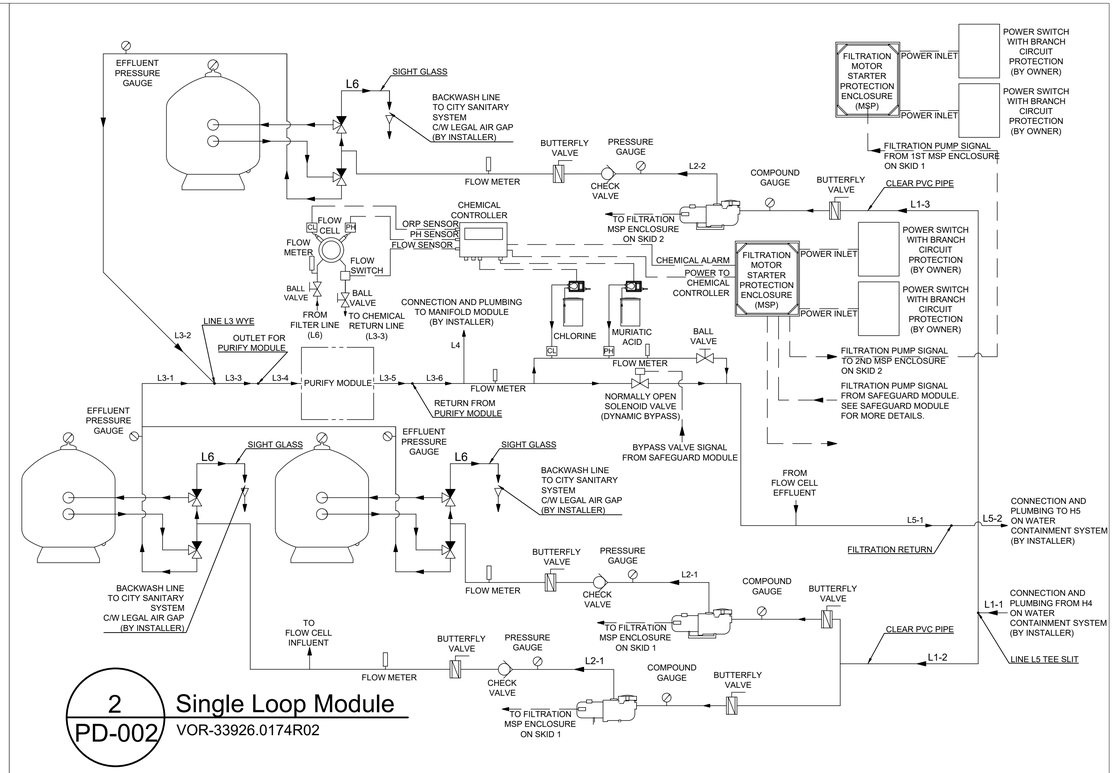

2 / PD-002 **Single Loop Module**
VOR-33926.0174R02

FILTRATION MODULE SPECIFICATIONS				
ITEM	ITEM	PROVIDED BY	DESCRIPTION	QTY
C-M	SINGLE LOOP MODULE MAIN POWER 1	OWNER	230 VAC, 1 PHASE, 60 Hz, 40 AMPS BREAKER RECOMMENDED.	1
C-S	SINGLE LOOP MODULE SECONDARY POWER 1	OWNER	120 VAC, 1 PHASE, 60 Hz, 10 AMPS BREAKER RECOMMENDED.	1
C1-M	SINGLE LOOP MODULE MAIN POWER 2	OWNER	230 VAC, 1 PHASE, 60 Hz, 25 AMPS BREAKER RECOMMENDED.	1
C1-S	SINGLE LOOP MODULE SECONDARY POWER 2	OWNER	120 VAC, 1 PHASE, 60 Hz, 10 AMPS BREAKER RECOMMENDED.	1
C1-1	SINGLE LOOP MOTOR STARTER PROTECTION ENCLOSURE 1	VORTEX	MOTOR STARTERS AND OVERLOAD RELAYS. INDIVIDUAL CONTROL FOR EACH PUMP. PROVIDES POWER TO CHEMICAL CONTROLLER. LOCATED ON SKID 1	1
C1-2	SINGLE LOOP MOTOR STARTER PROTECTION ENCLOSURE 2	VORTEX	MOTOR STARTERS AND OVERLOAD RELAYS. INDIVIDUAL CONTROL FOR EACH PUMP. LOCATED ON SKID 2.	1
C2	GALVANIZED STEEL UNISTRUT SKID	VORTEX	GALVANIZED STEEL UNISTRUT SKID	2
C3	COMPOUND GAUGE	WINTER INSTRUMENTS	COMPOUND GAUGE, 0-30" Hg / 0-60 PSI	3
C4	FILTRATION PUMP	PENTAIR, INTELLIFLO, i3	3 HP, SELF PRIMING VARIABLE SPEED PUMP, SINGLE PHASE 230V, 102 GPM @ 70 FT HD, 122 GPM @ 60 FT HD, 11.2 AMPS FLA @ 230V. NSF 50 CERTIFIED.	3
C5	SAND FILTER	PENTAIR, TRITON, TR-140C	7.06 SQ. FT, 141 GPM @ 20 GPM/SQ.FT, 106 GPM @ 15 GPM/SQ. FT, 36" DIAMETER, 3 WAY VALVE INCLUDED FOR BACKWASHING. NSF CERTIFIED.	3
C6	CHEMICAL CONTROLLER	BECS TECHNOLOGY, BECSYS3	ORP AND PH CONTROL WITH HIGH / LOW READING ALARM. NSF 50 CERTIFIED.	1
C7	PERISTALTIC PUMP	BLUE-WHITE IND, A1N20A-6T	UP TO 24GPD FEED CAPACITY, NSF CERTIFIED.	2
C8	INFLUENT PRESSURE GAUGE	WINTER INSTRUMENTS	PRESSURE GAUGE, 0-60 PSI	3
C9	EFFLUENT PRESSURE GAUGE	WINTER INSTRUMENTS	PRESSURE GAUGE, 0-60 PSI	3
C10	FLOW SWITCH	HARWILL	FLOW SWITCH, 24V	2
C11	FLOW METER	BLUE-WHITE IND, F-300 SERIES	3" PIPE FLOW METER, 45-240 GPM READING	3
C12	FLOW METER	BLUE-WHITE IND, F-300 SERIES	3/8" PIPE FLOW METER, 0.2-2 GPM READING	1
C13	FLOW METER	BLUE-WHITE IND, F-300 SERIES	4" PIPE FLOW METER, 75-420 GPM READING	1
C14	FLOW METER	BLUE-WHITE IND, F-300 SERIES	2" PIPE FLOW METER, 20-110 GPM READING	1
J	CHEMICAL RESERVOIR (OPTIONAL)	VORTEX	SEE CHEMICAL RESERVOIR INSTALLATION DRAWINGS FOR DETAILS.	2

LINE SIZE CONNECTION CHART				
BY	FROM	TO	ITEM	SIZE
INSTALLER	WATER CONTAINMENT SYSTEM H2	LINE L1 TEE SPLIT	L1-1	6"
INSTALLER	LINE L1 TEE SPLIT	FILTRATION PUMP C4 ON SKID 1	L1-2	6"
INSTALLER	LINE L1 TEE SPLIT	FILTRATION PUMP C4 ON SKID 2	L1-3	4"
VORTEX	FILTRATION PUMP C4 ON SKID 2	SAND FILTER C5 ON SKID 1	L2-1	3" (2)
VORTEX	FILTRATION PUMP C4 ON SKID 2	SAND FILTER C5 ON SKID 1	L2-2	3"
VORTEX	SAND FILTER C5 ON SKID 1	LINE L3 WYE	L3-1	6"
INSTALLER	SAND FILTER C5 ON SKID 2	LINE L3 WYE	L3-2	3"
VORTEX	LINE L3 WYE	OUTLET FOR PURIFY MODULE ON SKID 1	L3-3	6"
INSTALLER	OUTLET FOR PURIFY MODULE ON SKID 1	PURIFY MODULE	L3-4	6"
INSTALLER	PURIFY MODULE	RETURN FROM PURIFY MODULE ON SKID 1	L3-5	6"
VORTEX	RETURN FROM PURIFY MODULE ON SKID 1	TEE SPLIT	L3-6	6"
VORTEX	TEE SPLIT	MANIFOLD MODULE	L4	6"
VORTEX	TEE SPLIT	FILTRATION RETURN ON SKID 1	L5-1	4"
INSTALLER	FILTRATION RETURN ON SKID 1	WATER CONTAINMENT SYSTEM H5	L5-2	4"
INSTALLER	SAND FILTER C5	SANITARY SEWER SYSTEM	L6	3" (3)

3 / PD-002 **Single Loop Module**
VOR-33926.0174R02

IMPORTANT NOTE :
1) MINIMUM 10' [305cm] RECOMMENDED BETWEEN CHLORINE RESERVOIR AND ACID RESERVOIR. MIXTURE OF THESE CHEMICALS CAN PRODUCE A TOXIC FUME.

2) INSTALLATION IN VENTILATED ROOM RECOMMENDED.

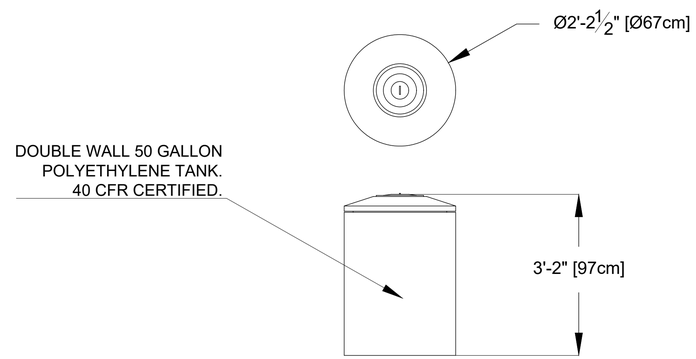

4 / PD-002 **Above Ground Chemical Reservoir-50 Gallons**
44100.0000R01

VORTEX
VORTEX AQUATIC STRUCTURES INTERNATIONAL

VORTEX USA Inc.
3500 South Dupont Highway,
Suite EP-101, Dover, Delaware
United States 19901
Phone: +1 (877) 586-7839

COPYRIGHT VORTEX USA Inc-THIS DOCUMENT AND THE IDEAS, RENDERINGS AND OTHER CONTENTS CONTAINED THEREIN ARE THE SOLE PROPETY OF VORTEX USA Inc AND MAY NOT BE DISSEMINATED, COPIED, REPRODUCED OR OTHERWISE USED WITHOUT PRIOR WRITTEN CONSENT OF VORTEX USA Inc.

El Dorado Park

Project Location
City of Lancaster, CA

Project Number
40371

Order Number
VE

Date	Revision Description	No.	By
COMPOSITE SET		9/24/25	
18/Aug/2023	Issued for Permit	00	OD

Drawing Title
Plumbing Details

Drawn by	Verified by
OD	MAB
Scale: N.T.S	Date: 18/Aug/2023

Page #
PD-002

NOTE:
A) VERIFY LOCAL CODES FOR MINIMUM ACCESS DIMENSIONS AROUND ELECTRICAL ENCLOSURES.
B) PIPE LOCATIONS ARE APPROXIMATE AND SUBJECT TO CHANGE WITHOUT NOTICE.
C) DIMENSIONS ARE APPROXIMATE AND SUBJECT TO CHANGE WITHOUT NOTICE.
D) BY INSTALLER/BY CONTRACTOR MAY REFER TO SERVICE PROVIDERS OTHER THAN THE EQUIPMENT MANUFACTURER.PLEASE REFER TO PROJECT SPECIFICATION FOR DETAILS OF RESPONSIBILITY.

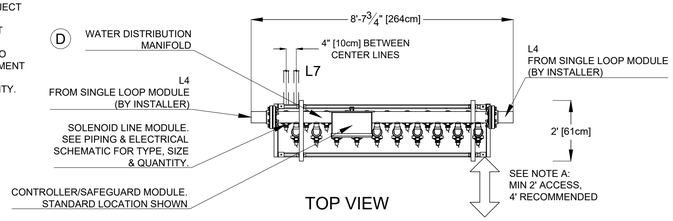

TOP VIEW

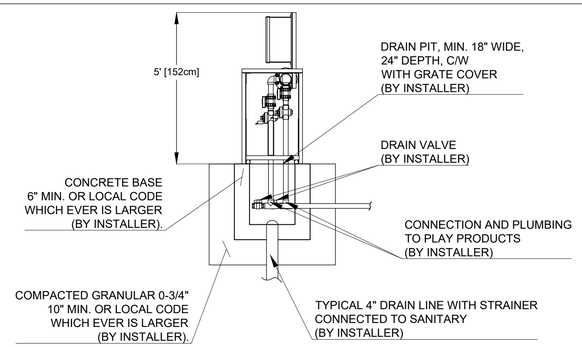

RIGHT VIEW
LOW POINT INSIDE SHELTER

1 / PD-003 Manifold Module 20 Valves, 2x4" Inlet, No Bypass
VOR-33921.0190R01

MANIFOLD MODULE SPECIFICATIONS				
ITEM	ITEM	PROVIDED BY	DESCRIPTION	QTY
D	WATER DISTRIBUTION MANIFOLD	VORTEX	20 VALVES DISTRIBUTION MANIFOLD, PRE-PLUMBED TO ALL SOLENOID LINES.	1

LINE SIZE CONNECTION CHART				
BY	FROM	TO	ITEM	SIZE
INSTALLER	SINGLE LOOP MODULE	WATER DISTRIBUTION MANIFOLD D	L4	4" (2)
INSTALLER	WATER DISTRIBUTION MANIFOLD D	FEATURES	L7	SEE P&E SCHEMATIC

NOTE:

REFER TO VORTEX' WATER QUALITY MANAGEMENT SYSTEM AND VORTEX' WATER CONTAINMENT SYSTEM FOR PIPE SIZES.
FOR FILTER/CIRCULATION PUMP SUCTION, PUT THE LESSER OF THE TWO PIPE SIZE.
FOR OTHER PIPE SIZE, PUT THE WATER QUALITY MANAGEMENT SYSTEM'S PIPE SIZE.
IF THE WATER CONTAINMENT SYSTEM IS NOT BY VORTEX, REFER TO VORTEX WATER QUALITY MANAGEMENT SYSTEM FOR PIPE SIZE.

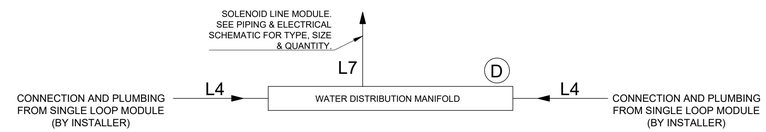

2 / PD-003 Manifold Module 20 Valves, 2x4" Inlet, No Bypass
VOR-33921.0190R01

NOTE:
A) VERIFY LOCAL CODES FOR MINIMUM ACCESS DIMENSIONS AROUND ELECTRICAL ENCLOSURES.

B) PIPE LOCATIONS ARE APPROXIMATE AND SUBJECT TO CHANGE.

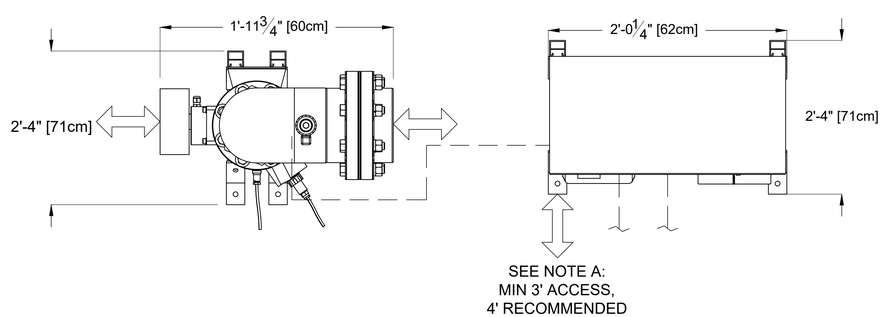

1 / PD-003 FEATURE PUMP MODULE 5HP, 230V 1PH 60Hz
VOR-33920.0020

PURIFY MODULE SPECIFICATIONS				
ITEM	ITEM	PROVIDED BY	DESCRIPTION	QTY
G	UV CONTROLLER POWER	OWNER	208 VAC, 1 PHASE, 60 Hz, 20 AMPS BREAKER RECOMMENDED, OR 230 VAC, 1 PHASE, 60 Hz, 20 AMPS BREAKER RECOMMENDED. 1 PHASE POWER CAN BE OBTAINED FROM 3 PHASE POWER.	1
G1	GALVANIZED STEEL UNISTRUT SKID	VORTEX	GALVANIZED STEEL UNISTRUT SKID	1
G2	ULTRA VIOLET REACTOR	ETS, WF-115-4-N	MEDIUM PRESSURE, STAINLESS STEEL CHAMBER. 396 GPM @ 40mJ/cm2, 3 LOG INACTIVATION (OUTDOOR SPLASHPAD), 361 GPM @ 60mJ/cm2.	1
G3	ULTRA VIOLET CONTROLLER	ETS, PGA 1x1500	CONTROL PANEL, 1 PHASE, 208/230 VAC, 20 AMPS, 30 LINEAR FEET OF CABLE PROVIDED. NSF 50 CERTIFIED	1
G4	FLOW METER	BLUE-WHITE IND, F-300 SERIES	6" PIPE FLOW METER, 170-1100 GPM READING	1
G5	JUNCTION BOX	VORTEX	MAESTROPRO CONTROLLER TO UV CONTROLLER JUNCTION BOX	1

LINE SIZE CONNECTION CHART				
BY	FROM	TO	ITEM	SIZE
INSTALLER	SINGLE LOOP MODULE	UV REACTOR G2	L3-4	6"
INSTALLER	UV REACTOR G2	SINGLE LOOP MODULE	L3-5	6"

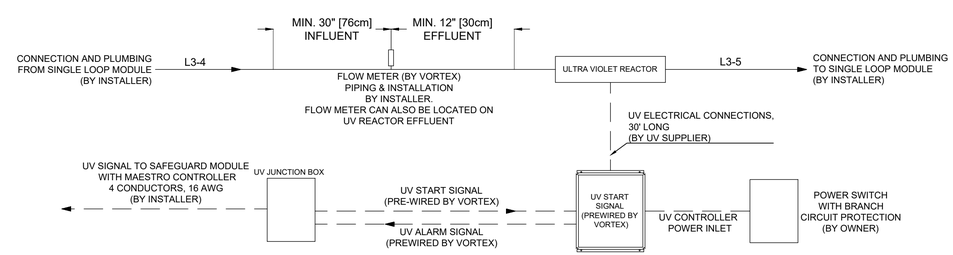

2 / PD-003 FEATURE PUMP MODULE 5HP, 230V 1PH 60Hz
VOR-33920.0020

VORTEX
VORTEX AQUATIC STRUCTURES INTERNATIONAL

VORTEX USA Inc.
3500 South Dupont Highway,
Suite EP-101, Dover, Delaware
United States 19901
Phone: +1 (877) 586-7839

COPYRIGHT VORTEX USA Inc-THIS DOCUMENT AND THE IDEAS, RENDERINGS AND OTHER CONTENTS CONTAINED THEREIN ARE THE SOLE PROPETY OF VORTEX USA Inc AND MAY NOT BE DISSEMINATED, COPIED, REPRODUCED OR OTHERWISE USED WITHOUT PRIOR WRITTEN CONSENT OF VORTEX USA Inc.

El Dorado Park

Project Location
City of Lancaster, CA

Project Number
40371

Order Number
VE

Date	Revision Description	No.	By
COMPOSITE SET		9/24/25	
18/Aug/2023	Issued for Permit	00	OD

Drawing Title
Plumbing Details

Drawn by: OD
Verified by: MAB
Scale: N.T.S
Date: 18/Aug/2023

Page #
PD-003

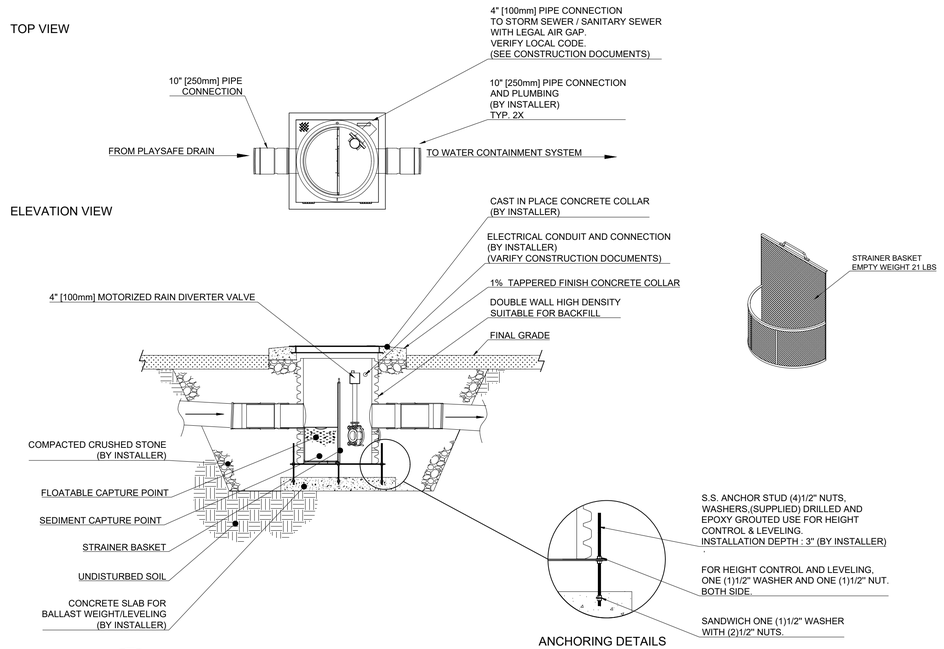

1 / PD-004 Debris Trap HDPE With Rain Diverter Valve
VOR-5322.0000R02

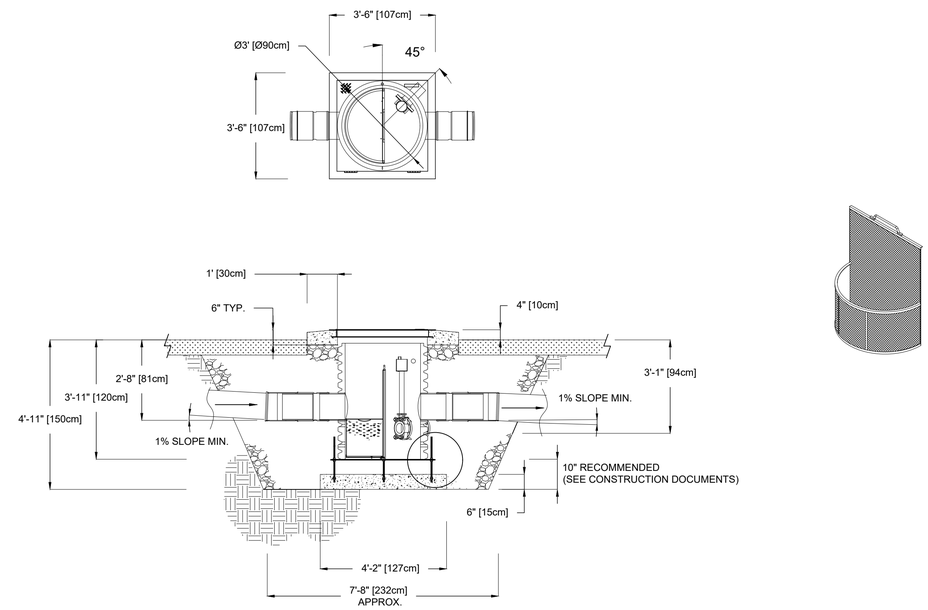

2 / PD-004 Debris Trap HDPE With Rain Diverter Valve
VOR-5322.0000R02

NOTES:
1. ALL DRAINAGE LINES ARE GRAVITY FEED. 1% SLOPE MIN, 2% SUGGESTED.
2.CONNECTION DO NOT REFLECT ACTUAL WATER CONTAINMENT SYSTEM. SEE INSTALLATION DRAWING FOR MORE DETAILS.
3.ENSURE ELEVATION OF OVERFLOW INSIDE WATER CONTAINMENT SYSTEM IS LOWER THAN MAIN DRAIN OUTLET OF DEBRIS TRAP.
OTHERWISE, WATER CONTAINMENT SYSTEM WILL PARTIALLY EMPTY ITSELF THROUGH THE DEBRIS TRAP'S RAIN DIVERTER VALVE WHEN IT IS OPEN.

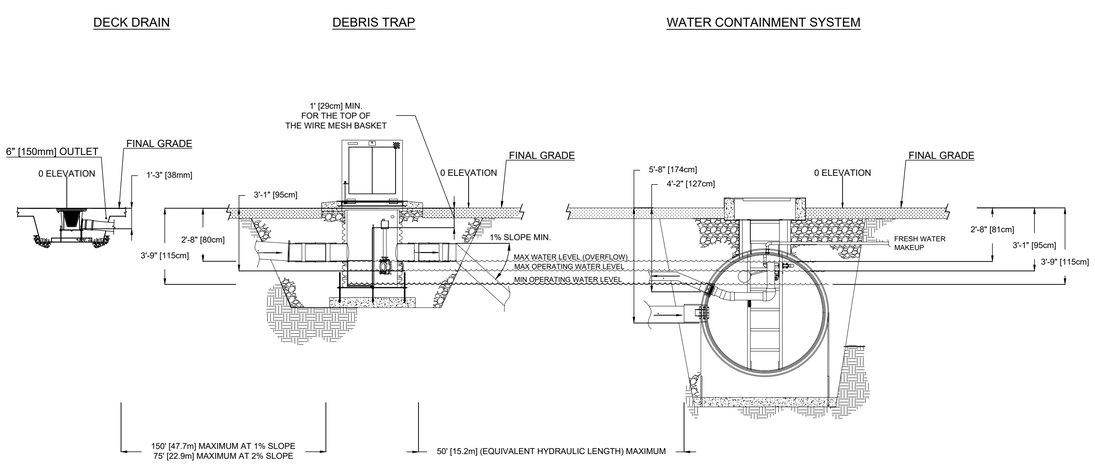

3 / PD-004 Debris Trap HDPE With Rain Diverter Valve
VOR-5322.0000R02

LINE SIZE CONNECTION CHART

BY	FROM	TO	ITEM	SIZE
INSTALLER	WATER DISTRIBUTION MANIFOLD D	FEATURES	L7	SEE P&E SCHEMATIC

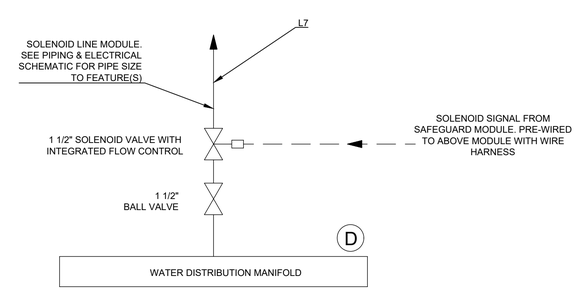

4 / PD-004 Solenoid Module
VOR-33921.8000R01

VORTEX
VORTEX AQUATIC STRUCTURES INTERNATIONAL
VORTEX USA Inc.
3500 South Dupont Highway,
Suite EP-101, Dover, Delaware
United States 19901
Phone: +1 (877) 586-7839

COPYRIGHT VORTEX USA Inc-THIS DOCUMENT AND THE IDEAS, RENDERINGS AND OTHER CONTENTS CONTAINED THEREIN ARE THE SOLE PROPETY OF VORTEX USA Inc AND MAY NOT BE DISSEMINATED, COPIED, REPRODUCED OR OTHERWISE USED WITHOUT PRIOR WRITTEN CONSENT OF VORTEX USA Inc.

El Dorado Park

Project Location
City of Lancaster, CA

Project Number
40371

Order Number
VE

Date	Revision Description	No.	By
COMPOSITE SET			9/24/25
18/Aug/2023	Issued for Permit	00	OD

Drawing Title
Plumbing Details

Drawn by: OD
Verified by: MAB
Scale: N.T.S
Date: 18/Aug/2023
Page #: PD-004

NOTE:

1. VERIFY LOCAL CODES FOR MINIMUM ACCESS DIMENSIONS AROUND ELECTRICAL ENCLOSURES.
2. DIMENSIONS ARE APPROXIMATE AND SUBJECT TO CHANGE WITHOUT NOTICE.
3. BY INSTALLER/BY CONTRACTOR MAY REFER TO SERVICE PROVIDERS OTHER THAN THE EQUIPMENT MANUFACTURER.PLEASE REFER TO PROJECT SPECIFICATION FOR DETAILS OF RESPONSIBILITY.

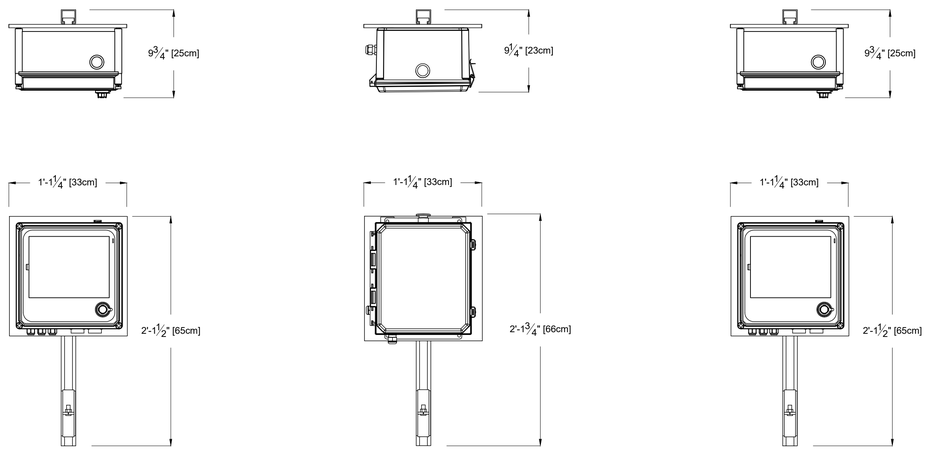

1 / ED-001 Safeguard Module with MaestroPro 48 Out / 12 In 120V 1PH 60Hz

VOR-33923.4110R02

NOTE:

1 - A MAXIMUM OF 1 ETHERNET CAT 5 CONNECTION IS AVAILABLE PER MAESTROPRO. IF MORE ETHERNET LAN CONNECTIONS ARE NEEDED, THEN IT REQUIRES AN ETHERNET SWITCH BOX (SOLD SEPARATELY).
2 - FOR DIGITAL INPUT, 5-24 VDC SUPPLIED BY MAESTROPRO. REFER TO THE CORRESPONDING SCHEMATIC DRAWING MANUAL FOR WIRING DETAILS.
3 - MAESTROPRO IS DHCP ADDRESSED BY CONNECTED LAN DEVICE.
4- WHEN USED WITH EXPANSION UNITS, AN ETHERNET CABLE IS REQUIRED BETWEEN EACH UNIT.
5- WATER TIGHT CONNECTIONS WITH MAESTROPRO DONE BY INSTALLER.
6- ALL WIRES AND CABLES ELECTRICAL CALCULATION ARE BY INSTALLER AND SHALL BE APPROVED ACCORDING TO LOCAL CODE AND BRAND NEW.

SAFEGUARD MODULE SPECIFICATIONS

ITEM	ITEM	PROVIDED BY	DESCRIPTION	QTY
F	CONTROLLER POWER	OWNER	120 VAC, SINGLE PHASE, 60 Hz, 10 AMPS BREAKER RECOMMENDED.	1
F1	MAESTROPRO SYSTEM CONTROLLER	VORTEX	24 OUTPUT, 12 INPUT TOUCH SCREEN INTERFACE CONTROLLER, PREWIRED TO ALL MANIFOLD MOUNTED COMPONENTS. USER PROGRAMMABLE OPERATIONAL HOUR TIME CLOCK AND SPLASHPAD SPRAY SEQUENCES. INCLUDE FACTORY PRESET SPRAY SEQUENCE. EQUIPMENT AND ALARM FAILSAFES.	1
F2	MAESTROPRO SYSTEM EXPANSION	VORTEX	24 OUTPUT, 12 INPUT EXPANSION, PREWIRED TO ALL MANIFOLD MOUNTED COMPONENTS.	1
F3	MAESTROPRO POWER BOX	VORTEX	RECEIVES 120 VAC POWER. PROVIDES 24 VAC & 24 VDC POWER TO MAESTROPRO CONTROLLER & EXPANSION.	2
F4	FILTER FLOW SWITCH	HARWILL	FLOW SWITCH, 9-36V. INSTALLED ON FILTRATION MODULE.	1

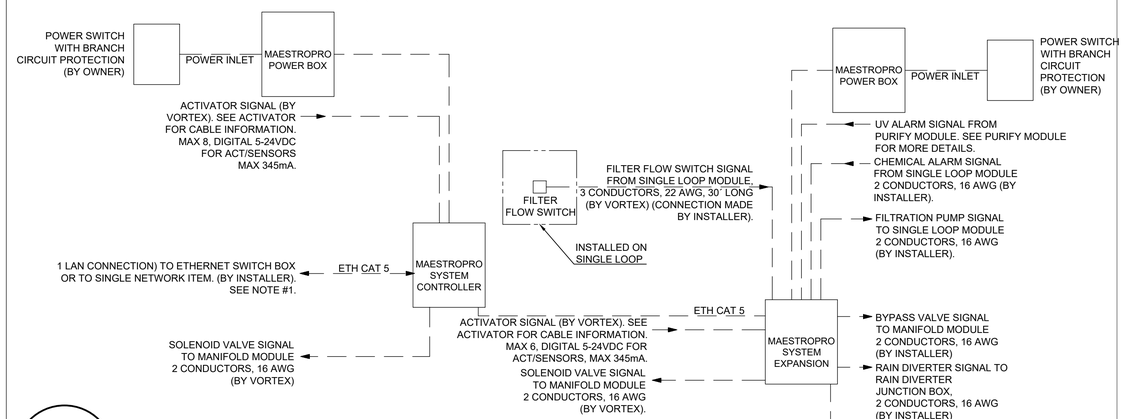

2 / ED-001 Safeguard Module with MaestroPro 48 Out / 12 In 120V 1PH 60Hz

VOR-33923.4110R02

VORTEX
VORTEX AQUATIC STRUCTURES INTERNATIONAL

VORTEX USA Inc.
3500 South Dupont Highway,
Suite EP-101, Dover, Delaware
United States 19901
Phone: +1 (877) 586-7839

COPYRIGHT VORTEX USA Inc-THIS DOCUMENT AND THE IDEAS, RENDERINGS AND OTHER CONTENTS CONTAINED THEREIN ARE THE SOLE PROPETY OF VORTEX USA Inc AND MAY NOT BE DISSEMINATED, COPIED, REPRODUCED OR OTHERWISE USED WITHOUT PRIOR WRITTEN CONSENT OF VORTEX USA Inc.

El Dorado Park

Project Location
City of Lancaster, CA

Project Number
40371

Order Number
VE

Date	Revision Description	No.	By
COMPOSITE SET			9/24/25
18/Aug/2023	Issued for Permit	00	OD

Drawing Title
Electrical Details

Drawn by: OD
Verified by: MAB
Scale: N.T.S
Date: 18/Aug/2023
Page #: ED-001

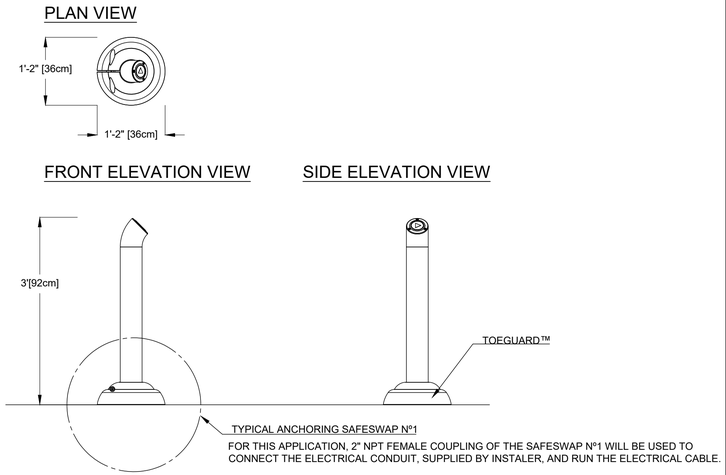

FOR THIS APPLICATION, 2" NPT FEMALE COUPLING OF THE SAFESWAP Nº1 WILL BE USED TO CONNECT THE ELECTRICAL CONDUIT, SUPPLIED BY INSTALER, AND RUN THE ELECTRICAL CABLE.

ELECTRICAL SPECIFICATION
TYPICAL 40mA AT 24V, M12-5PIN CONNECTOR CABLE, 22AWG, MAXIMUM O.D. : 0.25"
(SUPPLIED UP TO 75M WITH ACTIVATOR BY VORTEX)

1 / FT-001 **Bollard Activator No. 3**
VOR-0611.2XXX

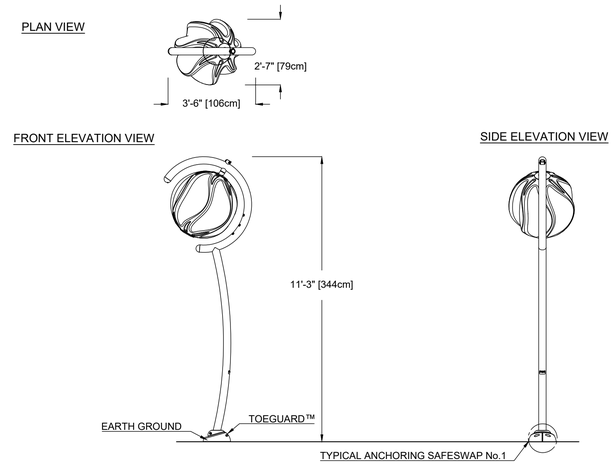

2 / FT-001 **Helio No.5**
VOR-7240.2XXX

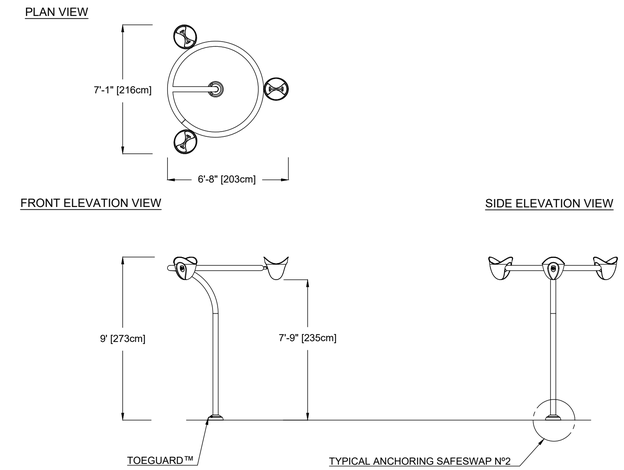

3 / FT-001 **Astra No.2**
VOR-7698.2XXX

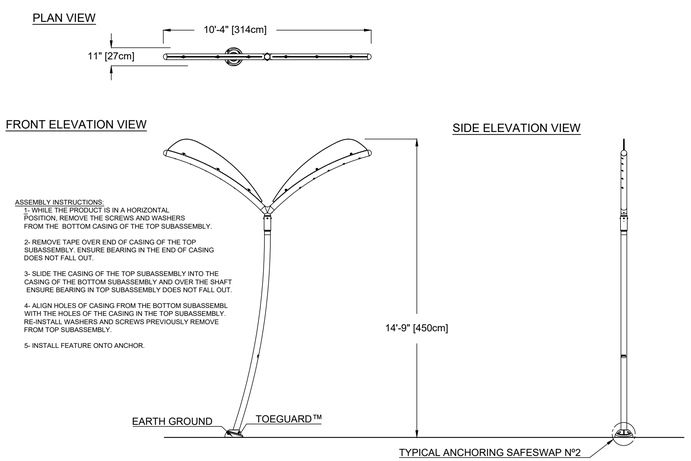

ASSEMBLY INSTRUCTIONS:
1- WHILE THE PRODUCT IS IN A HORIZONTAL POSITION, REMOVE THE SCREWS AND WASHERS FROM THE BOTTOM CASING OF THE TOP SUBASSEMBLY.

2- REMOVE TAPE OVER END OF CASING OF THE TOP SUBASSEMBLY. ENSURE BEARING IN THE END OF CASING DOES NOT FALL OUT.

3- SLIDE THE CASING OF THE TOP SUBASSEMBLY INTO THE CASING OF THE BOTTOM SUBASSEMBLY AND OVER THE SHAFT ENSURE BEARING IN TOP SUBASSEMBLY DOES NOT FALL OUT.

4- ALIGN HOLES OF CASING FROM THE BOTTOM SUBASSEMBL WITH THE HOLES OF THE CASING IN THE TOP SUBASSEMBLY. RE-INSTALL WASHERS AND SCREWS PREVIOUSLY REMOVE FROM TOP SUBASSEMBLY.

5- INSTALL FEATURE ONTO ANCHOR.

4 / FT-001 **Helico**
VOR-7790.2XXX

VORTEX
VORTEX AQUATIC STRUCTURES INTERNATIONAL

VORTEX USA Inc.
3500 South Dupont Highway,
Suite EP-101, Dover, Delaware
United States 19901
Phone: +1 (877) 586-7839

COPYRIGHT VORTEX USA Inc-THIS DOCUMENT AND THE IDEAS, RENDERINGS AND OTHER CONTENTS CONTAINED THEREIN ARE THE SOLE PROPETY OF VORTEX USA Inc AND MAY NOT BE DISSEMINATED, COPIED, REPRODUCED OR OTHERWISE USED WITHOUT PRIOR WRITTEN CONSENT OF VORTEX USA Inc.

El Dorado Park

Project Location
City of Lancaster, CA

Project Number
40371

Order Number
VE

Date	Revision Description	No.	By
COMPOSITE SET			9/24/25
18/Aug/2023	Issued for Permit	00	OD

Drawing Title
Feature Drawings

Drawn by	Verified by
OD	MAB
Scale	**Date**
N.T.S	18/Aug/2023

Page #
FT-001

QUOTE

VORTEX

Account Name:	City of Lancaster/Ca. - Parks & Recreation	Created Date:	5/18/2023 1:26 PM
Project Name:	40371-El Dorado Park	Quote Number:	QUO-19222-D7C6H9
Project ID:	40371	Quote Name:	40371-El Dorado Park_VA
Bill To Name:	City of Lancaster/Ca. - Parks & Recreation	Prepared By:	Everette Lathan
Bill To Address:	44933 Fern Avenue. Lancaster, CA 93534 USA	Email:	elathan@vortex-intl.com
		Incoterm:	
Contact Name:	Sonya Patterson		
Phone:	661-723-6077		
Email:	Spatterson@cityoflancasterca.org		

VOR	Product No.	Product Name	Description	QTY
1- Play Products				
0519	102524-304L	Spray Loop (SW, PC)		3
0555	104602-304L	Aqua Dome N°1 (SW,PC)		1
0611	104379-304L	ACTIVATOR N°3 (SW, PC)		2
3000	108168-304L	SPRAYLINK JET NO.1		14
3004	109918-304L	SPRAYLINK FAN		2
3005	109921-304L	SPRAYLINK GEYSER		3
3007	109944-304L	SPRAYLINK FOUNTAIN		2
3009	109949-304L	SPRAYLINK PODSPRAY		4
7127	100885-304L	PICO No.1 (SW,PC)		1
7134	101177-304L	HOP NO.2 (EM, PC)		1
7217	102639-304L	SNAIL N°4 (SW,PC)		1
7231	101006-304L	LUNA No.2 (SW, PC)		1
7232	101672-304L	BOBBLE No.1 (SW, PC)		1
7234	103350-304L	LUNA No.3 (SW, PC)		1
7235	103371-304L	LUNA CANNON N°1 (SW, PC)		2
7237	103655-304L	HELIO N°2 (SW, PC)		1
7238	101222-304L	HELIO No.3 (SW, PC)		1
7241	103633-304L	HELIO No.6 (SW, PC)		1
7250	106970-304L	CASCADE LOOP (SW,PC)		1
7254	106450-304L	Hop Starfish		3
7581	102062-304L	Waterbug N°2 (SW,PC)		1
7698	104560-304L	ASTRA N°2 (SW,PC)		1
7787	104493-304L	Bamboo Ring (SW, PC)		1
7799	102557-304L	SPIROO (SW,PC)		1

Vortex Aquatic Structures International, Corporate Headquarters
7800 Trans Canada, Pointe-Claire, Québec, Canada, H9R 1C6
Tel: +1-514-694-3868 or 1-877-586-7839 (USA & Canada)
Email: info@vortex-intl.com Website: vortex-intl.com

Vortex Aquatic Structures International, USA Office
3500 South Dupont Highway, Suite EP-101, Dover, DE 19901
Tel: +1 (704) 280-09271 or 1-877-586-7839 (USA & Canada)
Email: info@vortex-intl.com Website: vortex-intl.com

QUOTE

VORTEX

2- Water Management System and Controls				
	1- Water Quality Management System 'WQMS'			
		Custom WQMS	33926.0175R01 Single Loop Module 3x 3HP, 120/208-230V 3PH 60Hz, 3x 7 sq.ft. filter, chlorine & acid 33921.0298R01 Manifold Module 25 Valves, 2x 4" Inlet, No Bypass 33921.8000R01 25X Manifold Module Outlet Solenoid Line 1-1/2" 33923.4100R02 Safeguard with MaestroPRO, Splashpad, 48 out 24 in, 120V 1PH 60Hz, Single Loop 126424-304 PURIFY PACKAGE 396/361 GPM, 208-230V 1PH, 6" PIPING, WF-115-4-N	1
	4- Drains			
1004	103080-304L	Playsafe Drain N°4	Playsafe Drain N°4	3
6- Services				
10010	10010	WQMS Start-Up & Training Fees		1
13070	13070	Engineering Fee		1
7- Installation Kits				
	101143-304L	INSTALLATION KIT #SAFESWAP NO1		6
	101474-304L	INSTALLATION KIT #HEAVY DUTY SAFE SWAP No 1		1
	103335	M12 CONNECTION WIRE, 5-PIN, STRAIGHT CONNECTOR_75M LG_22AWG		2
	103529-304L	INSTALLATION KIT SAFESWAP FOR LUNA No.2		1
	103539-304	INSTALLATION KIT #SAFESWAP NO7 (MEDIUM SW) SURFACE MOUNT		2
Safeswap N°2	103543-304L	Installation Kit Safeswap N°2		16
	103553-304	INSTALLATION KIT # 3 5/8" X 6"MECH ANCHORS		2
	110184	SPRAYLINK BOX AND TRAY FOR SHIPPING		7
	116939-304L	INSTALLATION KIT FOR CASCADE LOOP		1
	123637-304L	TOOL KIT #128: INSTALLATION KIT FOR SPRAY LOOP (1 LOOP)		3
	100308	TOOL KIT #28:RIV-VOZZLE TOOL		1
	102313	TOOL KIT #0 :		1
	102314	TOOL KIT #1 :SECURITY BITS (ALL)		1
	110258	TOOL KIT #129: SPRAYLINK SECURITY KEY		1
	102304	TOOL KIT #120: PICO INSTALLATION JIG		1
	102307-304L	TOOL KIT #119: PICO SPIN NOZZLE		1
	100307	TOOL KIT #2 :NOZZLE TOOL		1
	102305-304L	TOOL KIT #123: POD SPRAY KEY		1

Vortex Aquatic Structures International, Corporate Headquarters
7800 Trans Canada, Pointe-Claire, Québec, Canada, H9R 1C6
Tel: +1-514-694-3868 or 1-877-586-7839 (USA & Canada)
Email: info@vortex-intl.com Website: vortex-intl.com

Vortex Aquatic Structures International, USA Office
3500 South Dupont Highway, Suite EP-101, Dover, DE 19901
Tel: +1 (704) 280-09271 or 1-877-586-7839 (USA & Canada)
Email: info@vortex-intl.com Website: vortex-intl.com

QUOTE

VORTEX

	102309-304L	TOOL KIT #116: LUNA No.3 NOZZLE TOOL		1
	100306	TOOL KIT #17 :SECURITY BITS (POOL PLAY)		1
	102301-304L	TOOL KIT #3 : 2 PIN KEY		1
8- Parts				
	5313.0022R01	WCS 4000G, SINGLE LOOP, ADJ. SUCTION & RETURN (EM)		1
	122984-304L	DEBRIS TRAP HDPE WITH RAIN DIVERTER VALVE (LEFT) (EM)		1
	123035	CHEMICAL VAULT ABOVE GROUND ASSEMBLY		2
9- Transport				
19030	19030	Freight Fee		1
19020	19020	Embed Freight Fee		1
18020	18020	Packaging Fee		1

Vortex Aquatic Structures International, Corporate Headquarters
7800 Trans Canada, Pointe-Claire, Québec, Canada, H9R 1C6
Tel: +1-514-694-3868 or 1-877-586-7839 (USA & Canada)
Email: info@vortex-intl.com Website: vortex-intl.com

Vortex Aquatic Structures International, USA Office
3500 South Dupont Highway, Suite EP-101, Dover, DE 19901
Tel: +1 (704) 280-09271 or 1-877-586-7839 (USA & Canada)
Email: info@vortex-intl.com Website: vortex-intl.com

NOTE: PROVIDED FOR BID PRICING ONLY. INFORMATION PROVIDED BY VORTEX AQUATIC STRUCTURES INTERNATIONAL DESIGN, ENGINEERING, AND SPECIFICATIONS PROVIDED FOR DESIGN INTENT. SPLASH PAD & PUMP HOUSE VENDOR TO BE VORTEX OR EQUAL.

VORTEX
VORTEX AQUATIC STRUCTURES INTERNATIONAL

VORTEX USA Inc.
3500 South Dupont Highway,
Suite EP-101, Dover, Delaware
United States 19901
Phone: +1 (877) 586-7839

COPYRIGHT VORTEX USA Inc-THIS DOCUMENT AND THE IDEAS, RENDERINGS AND OTHER CONTENTS CONTAINED THEREIN ARE THE SOLE PROPETY OF VORTEX USA Inc AND MAY NOT BE DISSEMINATED, COPIED, REPRODUCED OR OTHERWISE USED WITHOUT PRIOR WRITTEN CONSENT OF VORTEX USA Inc.

El Dorado Park

Project Location
City of Lancaster, CA

Project Number
40371

Order Number
VE

Date	Revision Description	No.	By
COMPOSITE SET		9/24/25	
18/Aug/2023	Issued for Permit	00	OD

Drawing Title
Specifications

Drawn by	Verified by
OD	MAB
Scale	**Date**
N.T.S	18/Aug/2023

Page #
SP-001

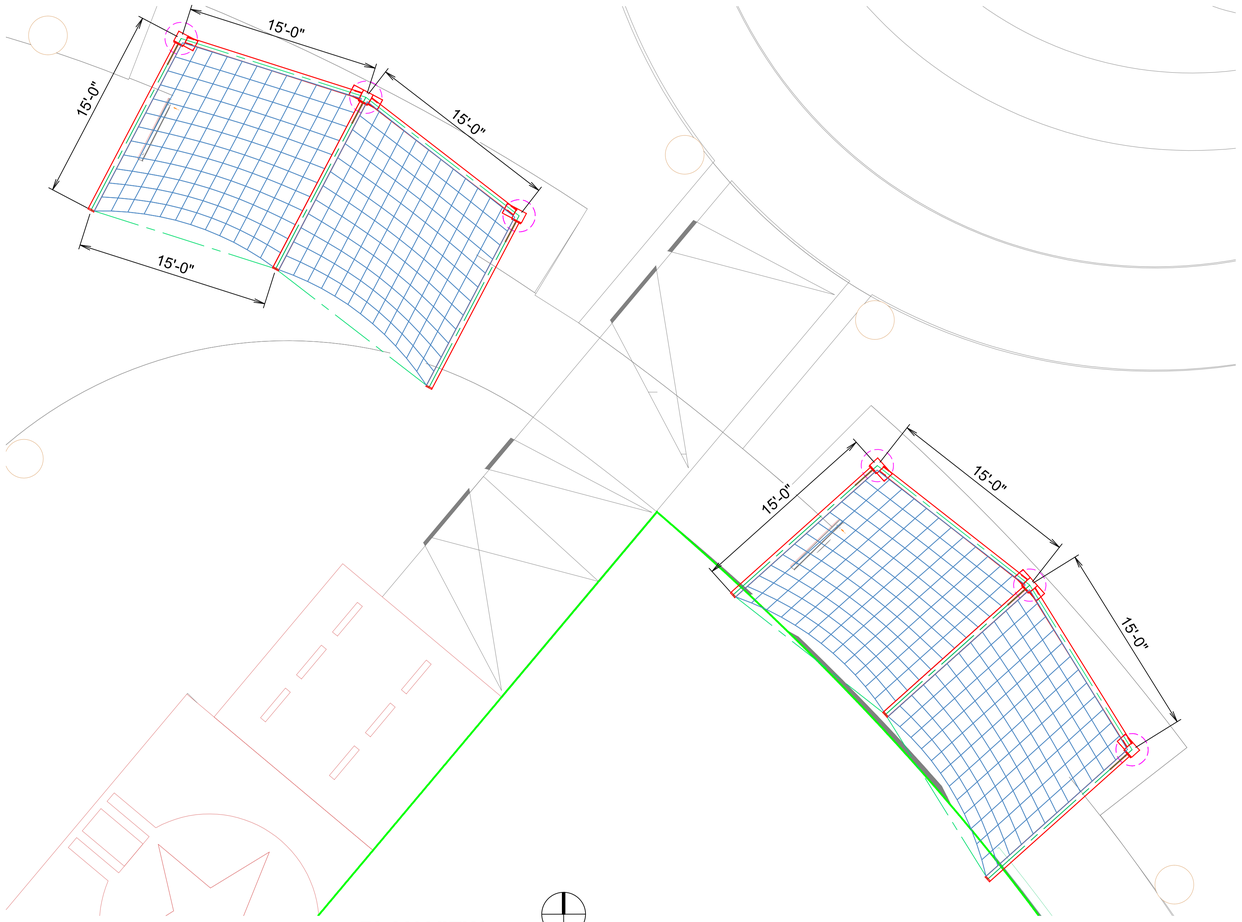

PLAN VIEW

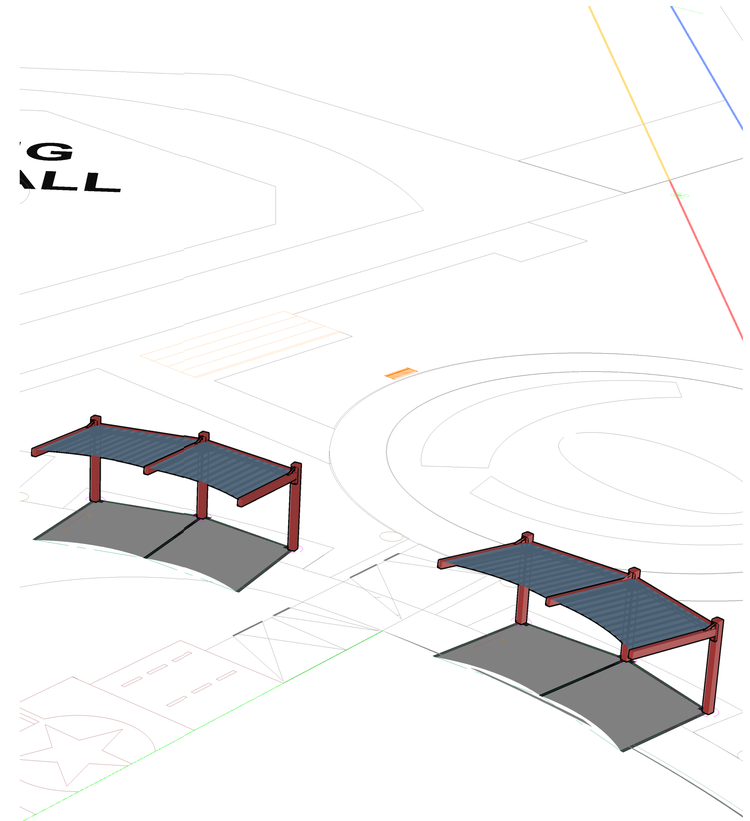

PERSPECTIVE VIEW

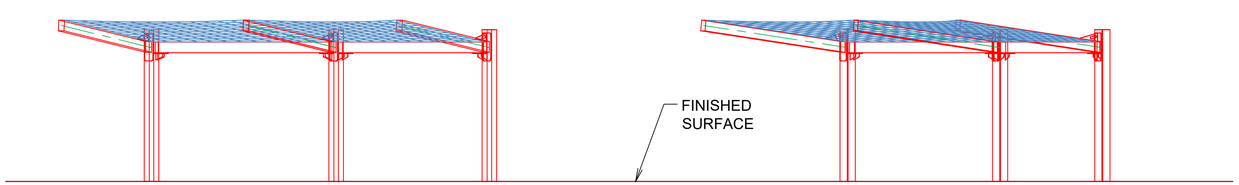

SOUTH ELEVATION

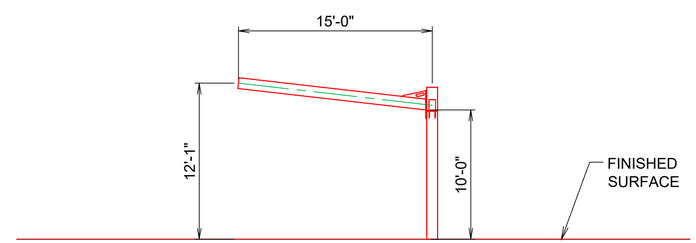

TYP. SECTION

As manufactured and installed by:
USA SHADE & Fabric Structures.

Contact :
Patti Abrecht
(949) 466-4592, (800) 966-5005
patti.abrecht@usa-shade.com

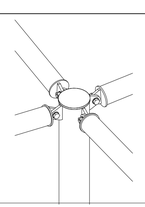

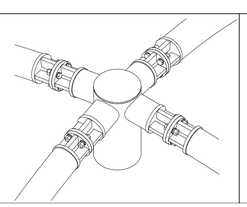

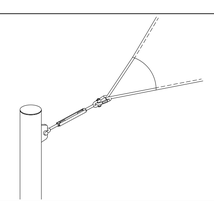

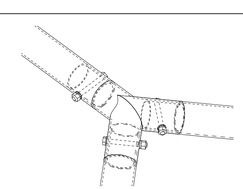

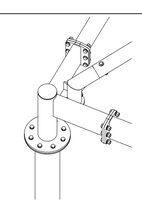

Notes:

-All structures will have bolted connections for shipping and installations purposes.

-Standard details being shown as an example. Final details t.b.d. during final Engineering phase.

-All dimensions and heights must be field verified prior to any final design, fabrication or installation work.

CUSTOMER:
EL DORADO PARK

PROJECT NAME:
EL DORADO PARK

LOCATION:
44501 5TH ST EAST
LANCASTER, CA 93534

STRUCTURE TYPE:
CUSTOM JOINED CANTI WING WITH CABLE

SIZE:
VARIES

THESE PLANS AND SPECIFICATIONS ARE THE PROPERTY OF USA SHADE AND FABRIC STRUCTURES AND SHALL NOT BE REPRODUCED WITHOUT THEIR WRITTEN PERMISSION.

USASHADE & Fabric Structures®
CORPORATE HEADQUARTERS
2580 ESTERS BLVD., SUITE 100
DFW AIRPORT, TX 75261
800-966-5005

CERTIFICATIONS:
IAS CERTIFICATION No: FA-428
CLARK COUNTY MANUFACTURER CERTIFICATION NUMBER (NEVADA): 355

REV	DESCRIPTION	DATE	DRW	CHK	ENG
	COMPOSITE SET	9/24/25			

Drawn By :	AZR	05/22/23
Checked By :	AZR	05/22/23
Approved By :	AZR	05/22/23

DRAWING DESCRIPTION:
STRUCTURE 1

DWG. CON-MAY-054-23

PAGE 1001

REV.

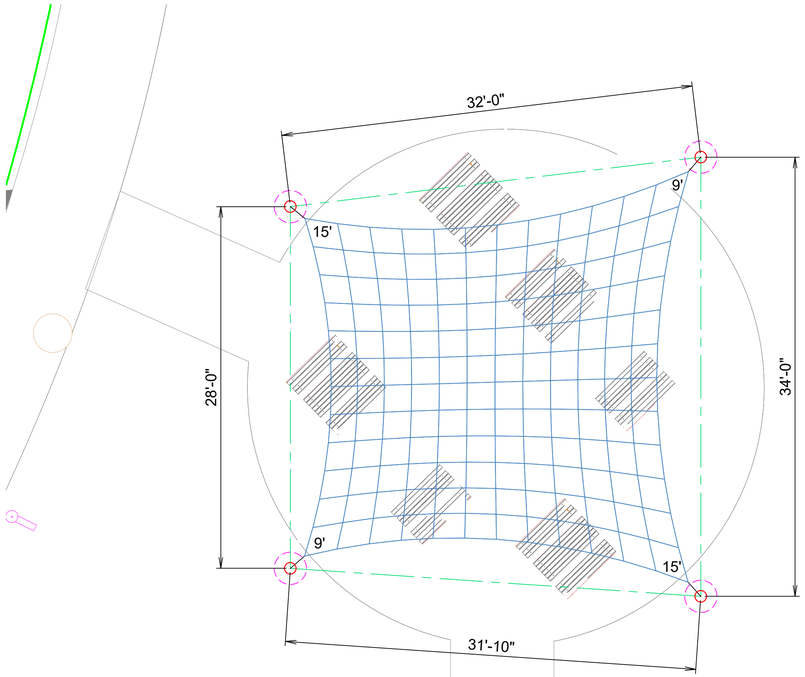

PLAN VIEW

PLAN NORTH

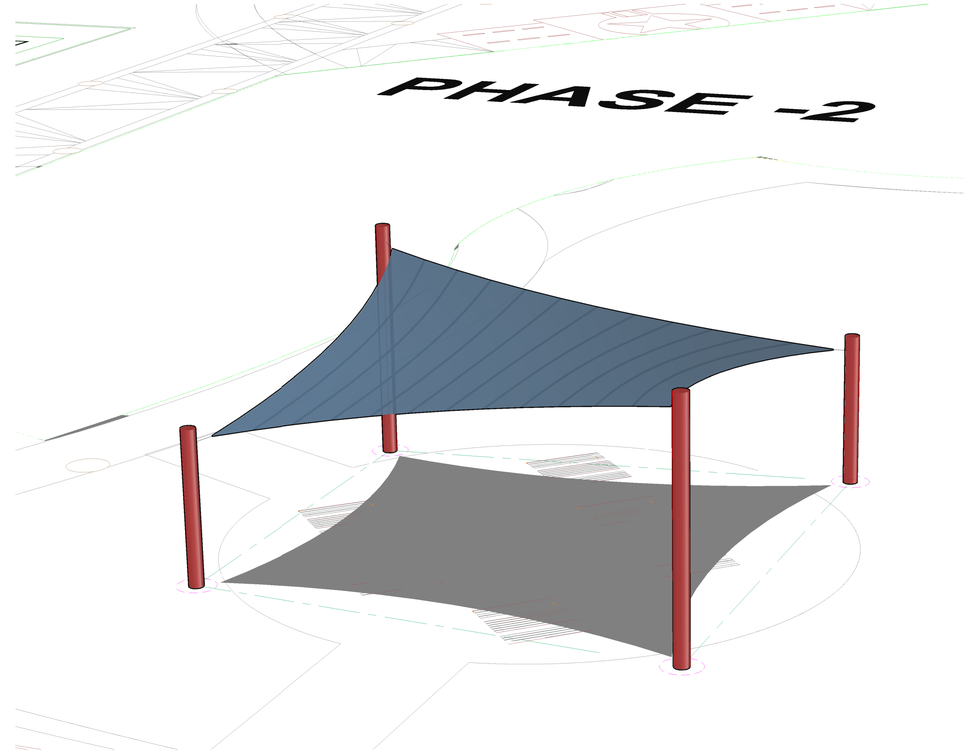

PERSPECTIVE VIEW

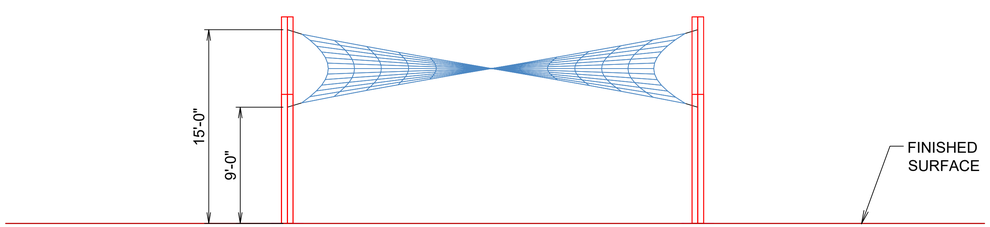

SOUTH ELEVATION

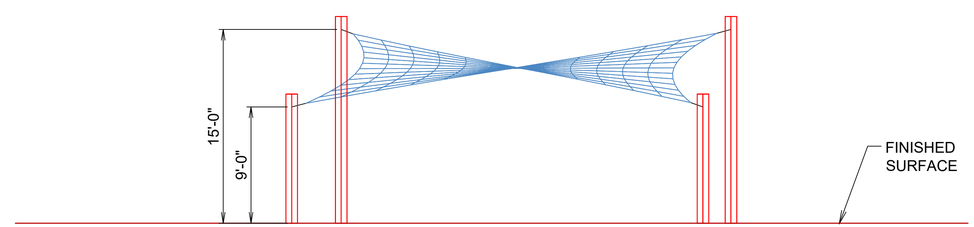

WEST ELEVATION

As manufactured and installed by:
USA SHADE & Fabric Structures.

Contact :
Patti Abrecht
(949) 466-4592, (800) 966-5005
patti.abrecht@usa-shade.com

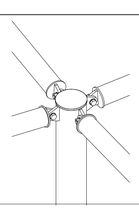

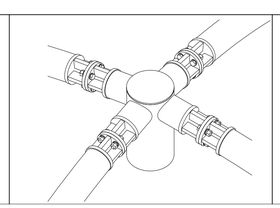

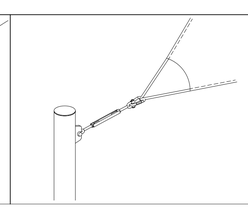

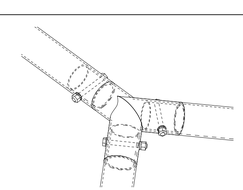

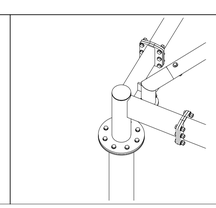

Notes:

-All structures will have bolted connections for shipping and installations purposes.

-Standard details being shown as an example. Final details t.b.d. during final Engineering phase.

-All dimensions and heights must be field verified prior to any final design, fabrication or installation work.

CUSTOMER:
EL DORADO PARK

PROJECT NAME:
EL DORADO PARK

LOCATION:
44501 5TH ST EAST
LANCASTER, CA 93534

STRUCTURE TYPE:
4PT SAIL

SIZE:
VARIES

THESE PLANS AND SPECIFICATIONS ARE THE PROPERTY OF USA SHADE & FABRIC STRUCTURES AND SHALL NOT BE REPRODUCED WITHOUT THEIR WRITTEN PERMISSION.

USASHADE & Fabric Structures®
CORPORATE HEADQUARTERS
2580 ESTERS BLVD., SUITE 100
DFW AIRPORT, TX 75261
800-966-5005

CERTIFICATIONS:
IAS CERTIFICATION No: FA-428
CLARK COUNTY MANUFACTURER CERTIFICATION NUMBER (NEVADA): 355

REV	DESCRIPTION	DATE	DRW	CHK	ENG
	COMPOSITE SET	9/24/25			

Drawn By :	AZR	05/22/23
Checked By :	AZR	05/22/23
Approved By :	AZR	05/22/23

DRAWING DESCRIPTION:
STRUCTURE 2

DWG. CON-MAY-054-23

PAGE 1002

REV.

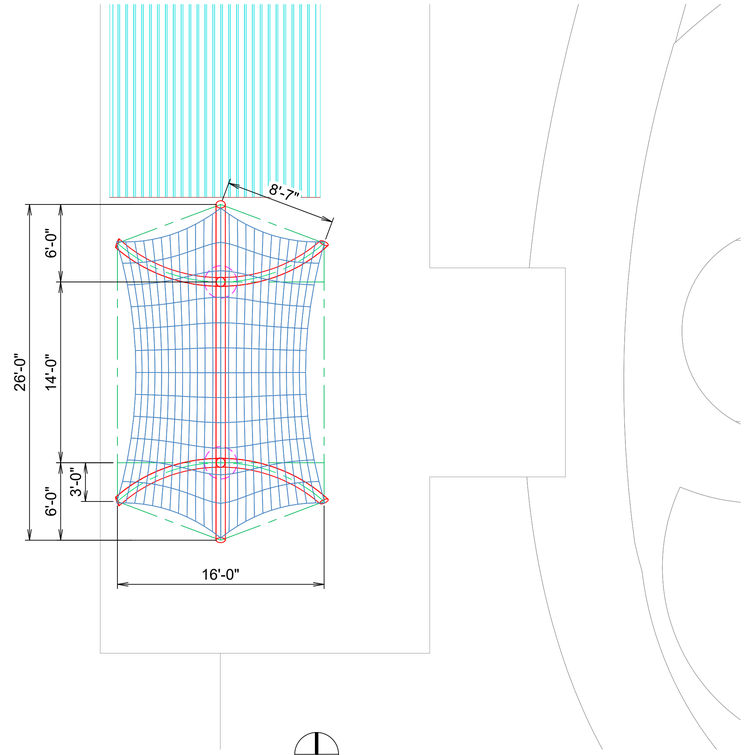

PLAN VIEW

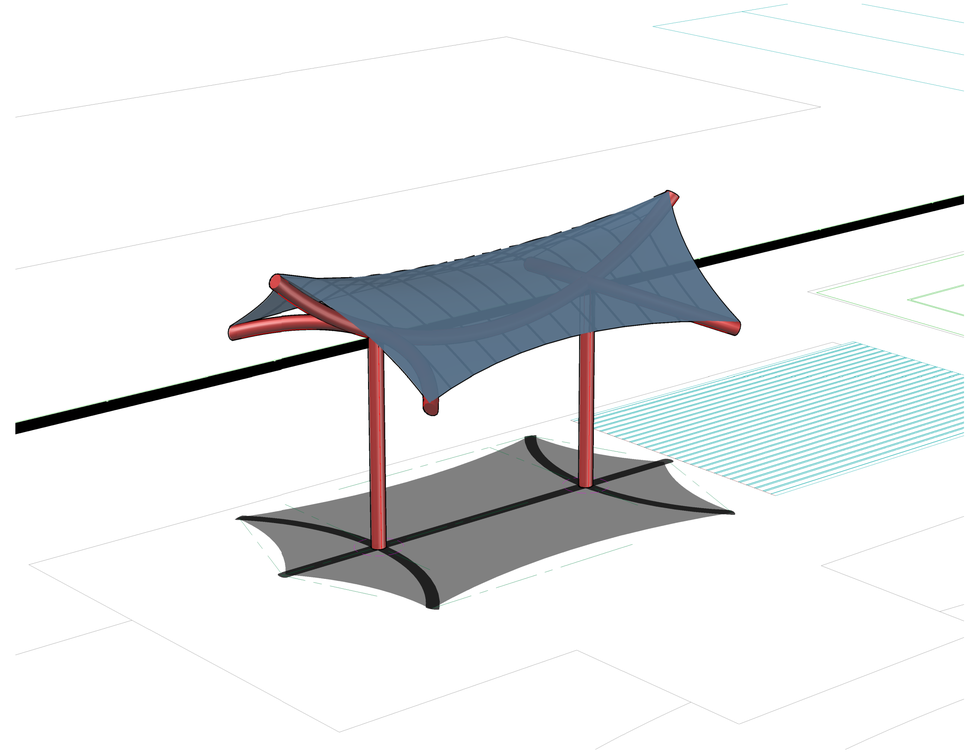

PERSPECTIVE VIEW

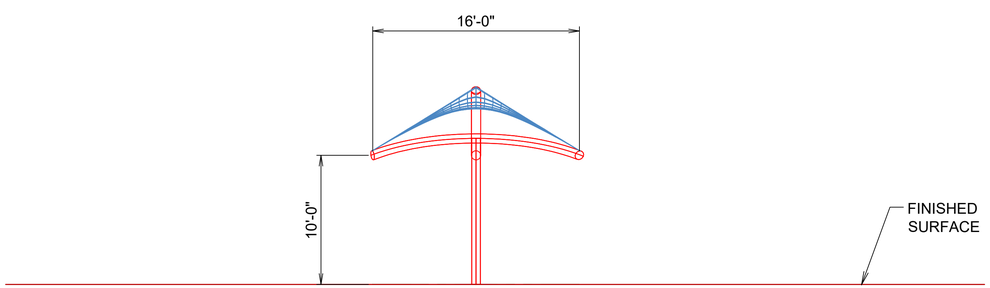

SOUTH ELEVATION

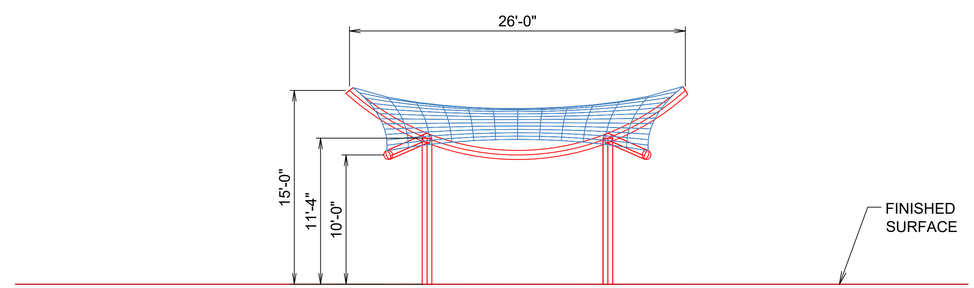

WEST ELEVATION

CUSTOMER:
EL DORADO PARK

PROJECT NAME:
EL DORADO PARK

LOCATION:
44501 5TH ST EAST
LANCASTER, CA 93534

STRUCTURE TYPE:
AQUARIUS

SIZE:
16' X 26' X 10'e

THESE PLANS AND SPECIFICATIONS ARE THE PROPERTY OF USA SHADE AND FABRIC STRUCTURES AND SHALL NOT BE REPRODUCED WITHOUT THEIR WRITTEN PERMISSION.

USASHADE & Fabric Structures®
CORPORATE HEADQUARTERS
2580 ESTERS BLVD., SUITE 100
DFW AIRPORT, TX 75261
800-966-5005

CERTIFICATIONS:
IAS CERTIFICATION No: FA-428
CLARK COUNTY MANUFACTURER CERTIFICATION NUMBER (NEVADA): 355

REV	DESCRIPTION	DATE	DRW	CHK	ENG
	COMPOSITE SET	9/24/25			

Drawn By :	AZR	05/22/23
Checked By :	AZR	05/22/23
Approved By :	AZR	05/22/23

As manufactured and installed by:
USA SHADE & Fabric Structures.

Contact :
Patti Abrecht
(949) 466-4592, (800) 966-5005
patti.abrecht@usa-shade.com

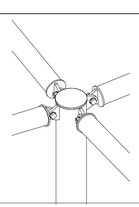

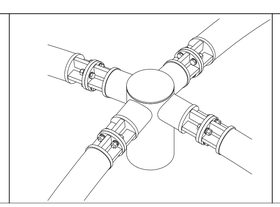

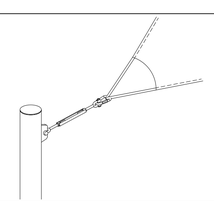

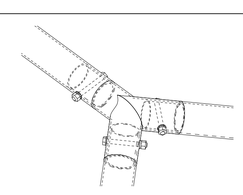

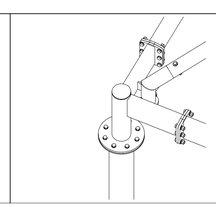

Notes:

-All structures will have bolted connections for shipping and installations purposes.

-Standard details being shown as an example. Final details t.b.d. during final Engineering phase.

-All dimensions and heights must be field verified prior to any final design, fabrication or installation work.

DRAWING DESCRIPTION:
STRUCTURE 3

DWG. CON-MAY-054-23

PAGE 1003

REV.

Construction Waste Management (CWM) Plan

Project Name: El Dorado Park Renovation
Job #: PWCP NO. 24-008
Project Manager: To be determined
Waste Hauling Company: To be determined
Contact Name: To be determined

All Subcontractors shall comply with the project's Construction Waste Management Plan.
All Subcontractor foremen shall sign the CWM Plan Acknowledgment Sheet.

Subcontractors who fail to comply with the Waste Management Plan will be subject to backcharges or withholding of payment, as deemed appropriate. For instance, Subcontractors who contaminate debris boxes that have been designated for a single material type will be subject to backcharge or withheld payment, as deemed appropriate.

1. The project's overall rate of waste diversion will be ____ %.
2. This project shall generate the least amount of waste possible by planning and ordering carefully, following all proper storage and handling procedures to reduce broken and damaged materials and reusing materials whenever possible. The majority of the waste that is generated on this jobsite will be diverted from the landfill and recycled for other use.
3. Spreadsheet 1, enclosed, identifies the waste materials that will be generated on this project, the diversion strategy for each waste type and the anticipated diversion rate.
4. Waste prevention and recycling activities will be discussed at the beginning of weekly subcontractor meetings. As each new subcontractor comes on-site, the WMP Coordinator will present him/her with a copy of the CWM Plan and provide a tour of the jobsite to identify materials to be salvaged and the procedures for handling jobsite debris. All Subcontractor foremen will acknowledge in writing that they have read and will abide by the CWM Plan. Subcontractor Acknowledgment Sheet enclosed. The CWM Plan will be posted at the jobsite trailer.
5. Salvage: Excess materials that cannot be used in the project, nor returned to the vendor, will be offered to site workers, the owner or donated to charity if feasible.
6. [HAULING COMPANY] will provide a commingled drop box at the jobsite for most of the construction waste. These commingled drop boxes will be taken to [Sorting Facility Name and Location]. The average diversion rate for commingled waste will be ____%. As site conditions permit, additional drop boxes will be used for particular phases of construction (e.g., concrete and wood waste) to ensure the highest waste diversion rate possible.
7. In the event that the waste diversion rate achievable via the strategy described in (6) above, is projected to be lower than what is required, then a strategy of source-separated waste diversion and/or waste stream reduction will be implemented. Source separated waste refers to jobsite waste that is not commingled but is instead allocated to a debris box designated for a single material type, such as clean wood or metal.

   Notes:

   1. Waste stream reduction refers to efforts taken by the builder to reduce the amount of waste generated by the project to below four (4) pounds per square foot of building area.
   2. When using waste stream reduction measures, the gross weight of the product is subtracted from a base weight of four (4) pounds per square foot of building area. This reduction is considered additional diversion and can be used in the waste reduction percentage calculations.
8. [HAULING COMPANY] will track and calculate the quantity (in tons) of all waste leaving the project and calculate the waste diversion rate for the project. [HAULING COMPANY] will provide Project Manager with an updated monthly report on gross weight hauled and the waste diversion rate being achieved on the project. [HAULING COMPANY's] monthly report will track separately the gross weights and diversion rates for commingled debris and for each source-separated waste stream leaving the project. In the event that [HAULING COMPANY] does not service any or all of the debris boxes on the project, the [HAULING COMPANY] will work with the responsible parties to track the material type and weight (in tons) in such debris boxes in order to determine waste diversion rates for these materials.
9. In the event that Subcontractors furnish their own debris boxes as part of their scope of work, such Subcontractors shall not be excluded from complying with the CWM Plan and will provide [HAULING COMPANY] weight and waste diversion data for their debris boxes.
10. In the event that site use constraints (such as limited space) restrict the number of debris boxes that can be used for collection of designated waste the project Superintendent will, as deemed appropriate, allocate specific areas onsite where individual material types are to be consolidated. These collection points are not to be contaminated with non-designated waste types.
11. Debris from jobsite office and meeting rooms will be collected by [DISPOSAL SERVICE COMPANY]. [DISPOSAL SERVICE COMPANY] will, at a minimum, recycle office paper, plastic, metal and cardboard.

APPROVED
May 28 2024
CITY OF LANCASTER BUILDING & SAFETY
V.S. SIMBULAN, JR.
Signature

Construction Waste Management (CWM) Worksheet

Project Name: El Dorado Park Renovation

Job Number: PWCP NO. 24-008

Project Manager: To be determined

Waste Hauling Company: To be determined

Construction Waste Management (CWM) Plan

WASTE MATERIAL TYPE	DIVERSION METHOD:		PROJECTED DIVERSION RATE
	COMMINGLED AND SORTED OFF SITE	SOURCE SEPARATED ON SITE	
Asphalt		150 SF	
Concrete		600 SF	
Shotcrete			
Metals			
Wood			
Rigid insulation			
Fiberglass insulation			
Acoustic ceiling tile			
Gypsum drywall			
Carpet/carpet pad			
Plastic pipe			
Plastic buckets			
Plastic			
Hardiplank siding and boards			
Glass			
Cardboard			
Pallets			
Job office trash, paper, glass & plastic bottles, cans, plastic			
Alkaline and rechargeable batteries, toner cartridges and electronic devices			
Other:			
Other:			
Other:			
Other:			

APPROVED

May 28 2024

CITY OF LANCASTER BUILDING & SAFETY

V.S. SIMBULAN, JR.

Signature

Construction Waste Management (CWM) Acknowledgment

Project Name: El Dorado Park Renovation

Job Number: PWCP NO. 24-008

Project Manager: To be determined

Waste Hauling Company: To be determined

CWM Plan Acknowledgment

The Foreman for each new Subcontractor that comes on site is to receive a copy of the Construction Waste Management Plan and complete this Acknowledgment Form.

I have read the Waste Management Plan for the project; I understand the goals of this plan and agree to follow the procedures described in this plan.

DATE	SUBCONTRACTOR COMPANY NAME	FOREMAN NAME	SIGNATURE

APPROVED

May 28 2024

CITY OF LANCASTER BUILDING & SAFETY

V.S. SIMBULAN, JR.

Signature